Smithsonian Institution

Office of Engineering Design & Construction

SPECIFICATIONS

PROJECT NO.: 2033101

PROJECT TITLE: Smoke Control Modifications

FACILITY: Smithsonian National Zoological Park - Panda House

DATE: **30 October 2020**
SUBMISSION: **Final Submission**

This project is approved as being in conformance with applicable provisions of the Smithsonian Directive (SD) 410.

12/3/20

Michael J. Carrancho, P.E., Associate Director Date

600 Maryland Avenue, S.W.
Suite 5001
Washington, D.C. 20024
Voice: 202.633.6230 Fax: 202.633.6233

USPS Mail: OEDC Capital Gallery
MRC 511
P.O. Box 37012
Washington, D.C. 20013-7012

SECTION 000107 - SEALS PAGE

1.1 DESIGN PROFESSIONALS OF RECORD

A. Architect:

1. Larry R. Barr
2. DC#: ARC 100516
3. Responsible for all Divisions except where indicated as prepared by other design professionals of record.

B. Structural Engineer:

1. Colleen Nasta, PE
2. VA#: 0402045845
3. Responsible for Drawing Series S; Specifications as noted on TOC

C. Mechanical Engineer:

1. Daniel Carmine
2. DC#: PE 901312
3. Responsible for Drawing Series M; Specifications Division 22 and 23 except as noted on TOC.

D. Electrical Engineer:

1. Carl E. Canatella
2. DC#: 7719
3. Responsible for Drawing Series E; Specification Division 26 except as noted on TOC.

10/16/2020

10/16/2020

E. Fire Protection Engineer - Sprinkler:

1. Isa Saah
2. DC#: PE900147
3. Responsible for Drawing Series KP; Specifications Section 21 1313.

DISTRICT OF COLUMBIA
ISA Y. SAAH
No. 900147
10/16/2020
REGISTERED
PROFESSIONAL ENGINEER

F. Fire Protection Engineer - Fire Alarm:

1. Isa Saah
2. DC#: PE900147
3. Responsible for Drawing Series FA; Specifications Section 28 3111.

DISTRICT OF COLUMBIA
ISA Y. SAAH
No. 900147
10/16/2020
REGISTERED
PROFESSIONAL ENGINEER

END OF SECTION 000107

SPECIFICATIONS

TABLE OF CONTENTS

FACILITIES CONSTRUCITION SUBGROUP

FACILITIES SERVICES SUBGROUP

DIVISION 21- FIRE SUPPRESSION

DIVISION 22 - PLUMBING

DIVISION 23 - HEATING, VENTILATING, AND AIR-CONDITIONING (HVAC)

DIVISION 26 - ELECTRICAL

DIVISION 28 - ELECTRONIC SAFETY AND SECURITY

SITE AND INFRASTRUCTURE SUBGROUP **NOT USED**

PROCESS EQUIPMENT SUBGROUP **NOT USED**

DIVISION 1 - GENERAL REQUIREMENTS

SECTION 01000

SUPPLEMENTARY CONDITIONS FOR CONSTRUCTION

PROJECT SUMMARY AND INFORMATION

53. PROJECT INFORMATION

1.1. OFEO/NZP Project No. 1133107/203315
Smoke Control Modifications - Panda House
National Zoological Park
3001 Connecticut Avenue, NW
Washington, D.C. 20008

1.2. Smithsonian Institution Contacts:

Contracting Officer (CO): Dorothy A. Leffler

Contracting Officer (CO), address for Fed Ex and UPS delivery:
Smithsonian Institution
Office of Contracting
2011 Crystal Drive, Suite 350
Arlington, VA 22202

Contracting Officer (CO), address for USPS delivery:
Smithsonian Institution
Office of Contracting
MRC 1200
P.O. Box 37012
Washington, DC 20013-7012

1.3. Contracting Officer's Technical Representative (COTR)
Mr. Marc Muller
Smithsonian Institution
National Zoological Park
General Services and Parking Building, Level 1
Resident Engineer's Office
3001 Connecticut Avenue, NW
Washington, D.C. 20008
Telephone No. 202-633-4410

54. SUMMARY OF WORK

2.1 The Contractor shall furnish all supervision, labor, materials, and equipment to complete all Work as detailed in the contract documents for OFEO Project No. 2033101, Smoke Control Modifications for Panda House, as set forth on the Drawings, sheets G001 through FA701, and in these specifications, both dated October 16, 2020 at the Smithsonian Institution's National Zoological Park, located at 3001 Connecticut Avenue, NW, Washington, DC, 20008. The goal of this project is to provide a smoke control system, that, in the event of a fire, shall preserve the animals housed within the respective buildings and at the same time maintains the reliability of egress for visitors and staff. Additionally, the storefront at all four Exhibits will be replaced under this project as well as the installation of a training wall and gate modifications.

2.2 This work includes but is not limited to the following:

2.2.1 Installation of a smoke management system, including mechanical and electrical requirements.

2.2.2 Modifications of the existing fire alarm system and wet-pipe sprinkler system to accommodate the smoke management system.

2.2.3 Structural and Architectural changes required for the installation of the smoke management system and modifications to the existing fire alarm and wet-pipe sprinkler systems.

2.2.4 Removal of existing storefront and associated concrete curbs at Panda House Exhibits 1,2, 3, and 4.

2.2.5 New storefront system and associated concrete curbs at Panda House Exhibits 1, 2, 3, and 4.

2.2.6 New training wall at Exhibits 1 only.

2.2.7 Repair mural in all Exhibits and rockform in Exhibits 2 and 3.

2.2.8 Modifications to existing guardrail and gate in visitor area.

2.2.9 When contractor has completed and checked his work, contact COTR for an inspection. Contractor shall clean up and dispose all debris associated with job.

2,2,10 Contractor will be responsible for all labor, materials, and equipment to complete project.

This short description, however, shall not, in any way, be construed to limit the Contractor's obligation for compliance with the contract specifications.

2.3. <u>Critical Elements of the Work:</u>

54.1.1. Scheduling with the animal department in adjacent areas.

3. CONTRACT TIME FOR COMPLETION

3.1. Work under this contract shall begin by the Contractor within seven (7) calendar days after the Notice to Proceed and shall be completed within the total contract time of one hundred and eighty (180) calendar days. All work, including inspections, testing, correction of deficiencies, and project close-out activities, shall be completed in every respect within the contract time.

3.2 The start date and completion date shall be as stated in the Notice to Proceed issued by the Contracting Officer.

3.3 COTR will coordinate construction start date with NZP Animal Programs staff and will be dependent on the health condition of the animals housed within the project building.

3.4 Refer to sheet G003 for construction phasing requirements.

4. BIDDER EXAMINATION OF SITE

4.1. Every effort has been made to indicate all work necessary to complete the project as identified. All bidders shall carefully examine the premises during the bid period and satisfy themselves as to the extent, nature, and location of the work, general and local conditions, particularly those bearing on transportation, disposal, handling and storage of materials, availability of labor, water, electric power, access routes, uncertainties of the weather, type of equipment and facilities needed for the successful execution of the Work.

4.2 Pre-Bid Conference and Site Visit. Before the bid opening date, the Contracting Representative will announce a scheduled pre-bid conference and site visit. The purpose of the scheduled meeting is to provide an opportunity for all bidders to review the project site. Any comments, information or discussion during the site visit shall not modify the contract documents.

5. AVAILABILITY OF DOCUMENTS

5.1. The bidder may obtain an electronic versions of drawings and specifications from:

Smithsonian Institution
Office of Engineering Design and Construction
600 Maryland Avenue, SW., Suite 5001
Washington, DC 20560

7.2. The bidder is responsible for making their own hard copies of the solicitation documents.

6. INSURANCE

6.1. The Contractor shall submit all insurance information indicated in the Construction Contract Clauses in the Indefinite Delivery Indefinite Quantity (IDIQ) agreement.

SPECIAL PROJECT REQUIREMENTS

7. UNITS OF MEASURE

7.1. All fabrication and installation shall be performed in accordance with the units of measure given in the Contract Documents.

8. NON-PUBLIC, TENANT AND SECURED SPACES

8.1. Certain tenant spaces, non-public spaces, utility and equipment rooms, and other areas related to or used for purposes of storage, conservation, research, curation of Zoo collection and artifacts or for scientific research may have restricted access.

8.2. The Contractor shall identify to the COTR as soon as possible, but no less than two working days in advance, any occupied areas that the Contractor must access that are located outside the limits of the project site. The Contractor shall identify in writing:

8.2.1. Restricted areas to be accessed.

8.2.2. Specific reason for needing access.

8.2.3. Nature of the work to be performed.

8.2.4. Date(s) and hours needed to complete construction work activity.

9. PROTECTION OF HISTORIC PROPERTIES

9.1. The project site is located in a designated National Historic Landmark property and requires special attention to the quality of materials selected for installation and workmanship efforts to satisfactorily preserve and restore historic elements and finishes of an historic landmark structure.

9.2. Upon request of the COTR, the Contractor shall submit evidence of technical competence in restoration work for National Historic Landmark structures, including subcontractor resumes, references and photographs or previous similar work.

9.3. Without exception, all original building fabric of the National Zoological Park is designated historic.

10. COMMITMENT TO SUSTAINABILITY

(This is not a LEED project however Construction Waste Management and Disposal in Section 12.2 will apply.)

10.1. The Smithsonian Institution is a trust instrumentality of the United States (recognized as a tax-exempt organization under Section 501(c)(3) of the Internal Revenue Code) and although not an Executive Branch of the U.S. Government, is committed to planning, designing, constructing, maintaining and operating its owned and leased buildings and facilities consistent

with Federal environmental and energy management requirements, as listed in the Smithsonian SF Codes, Standards

11. COMMISSIONING

NIC

CONTRACTOR USE OF PREMISES

12. HOURS OF WORK, WORKDAYS, AND GOVERNMENT HOLIDAYS

12.1. Work shall be performed under this contract during the normal workdays of Monday through Friday, except Smithsonian holidays as specified herein, and the normal work hours of 7:00 a.m. to 3:30 p.m.

12.2. The premises will be continually occupied, requiring that certain work under this contract may need to be performed during periods other than that specified above. All shutdowns and outages must be approved by and coordinated with the COTR and occur between the hours of 6:00 p.m. to 6:00 a.m., unless otherwise approved.

12.3. For each occasion the Contractor intends to work on Saturdays, Sundays or Smithsonian holidays, or during hours other than those indicated above, the Contractor shall obtain special written permission from the COTR for each occasion, at least 24 hours in advance.

12.3. The Contractor **shall** reimburse the Smithsonian Institution for security and inspection services provided by the Zoo when the Contractor chooses to work outside the normal workdays and hours, as identified herein. However, the Contractor will not be charged for Zoo overtime security and inspection services, if in the opinion of the COTR, the work cannot be done during the normal workdays and hours due to requirements of the Smithsonian.

12.4. Smithsonian Holidays. For holidays that fall on Saturday, the Smithsonian holiday is observed on the previous Friday. For holidays that fall on Sunday, the Smithsonian holiday is observed on the following Monday. The Smithsonian holidays are listed below.

New Year's Day	January 1
Martin Luther King Jr.'s Birthday	January, third Monday
George Washington's Birthday	February, third Monday
Memorial Day	May, last Monday
Independence Day	July 4
Labor Day	September, first Monday
Columbus Day	October, second Monday
Veterans' Day	November 11
Thanksgiving Day	November, fourth Thursday
Christmas Day	December 25

Presidents Day Inauguration January 20, 2021

13. CONDITIONS AFFECTING CONTRACTOR'S WORK

13.1. Existing Occupied Spaces: The premises will be occupied during the performance of the Work. The Contractor shall schedule work activities to minimize interruption of occupants and occupied spaces. Efforts will be made to temporarily move employees and contents out of specific areas under construction, as needed, during the times requested by the Contractor. However, the needs of the Smithsonian Institution take precedence and free access for the Contractor cannot always be guaranteed. The Contractor may work in animal areas*only in the presence of authorized Smithsonian staff or guard personnel. Areas that will remain occupied include the grounds of the NZP.

14. DELIVERIES, HAULING, AND ACCESS

14.1. Normal deliveries shall be made between the hours of 6:00 a.m. and 10:00 a.m. The Contractor's materials and equipment shall be delivered, received, receipted for and handled by the Contractor's personnel. Access to the site for on or off loading of all material, structures and equipment shall be designated by the COTR.

15. DRESS AND DEPORTMENT

15.1. All Contractors' personnel shall always be fully and appropriately clothed and shall conduct themselves in a manner appropriate to a public place. The COTR may require removal of any individual from the premises and project for unacceptable dress, demeanor, or disruptive conduct, if the Contractor superintendent fails to correct conditions in violation of this paragraph.

15.2 The Government reserves the right to exclude or remove from the site or building any employee of the Contractor or Subcontractor as the Government deems incompetent, careless, insubordinate, or otherwise objectionable, or whose continued employment of the work is deemed by the Government to be contrary to public interest.

16. CONTRACTOR PARKING

16.1. One parking space will be assigned to the Contractor for use during the contract period. The space will be located as close to the project site as possible. Coordinate with COTR.

16.2. NOT USED

16.3. The assigned space can only be used by the company vehicle. The vehicle must be clearly marked with company name and/or logo. The permit shall be displayed on the vehicle dashboard on the driver's side. Vehicles not in compliance with this clause are subject to ticketing and towing by the NZP police. Costs associated with parking violations shall be the sole responsibility of the Contractor.

16.4. Parking spaces will not be provided for the Contractor’s employees. Employees will be required to comply with the NZP’s pay parking regulations.

16.5 Arrangements for Contractor's parking are the sole responsibility of the Contractor. Parking may not be available at the project site

17. EATING, DRINKING, SMOKING, AND ILLEGAL SUBSTANCE ABUSE

17.1. Eating and drinking in Smithsonian buildings or leased space will be allowed only in designated areas. Offenders may be subject to removal from the premises and project should the Contractor's Superintendent fail to correct conditions, which, in the opinion of the COTR, violate this clause.

17.2. The consumption of alcoholic beverages by the Contractor's personnel is prohibited in all Smithsonian buildings or leased space.

17.3. Smoking or carrying lighted tobacco products is prohibited in all Smithsonian buildings or leased space, in exhibition and public spaces, in areas where hazardous materials are stored or handled, and in areas undergoing construction, renovation, or repair. Acceptable areas for smoking are outside of the building, as designated by the Smithsonian Facility Manager, and/or Office of Safety, Health and Environmental Management (OSHEM).

17.4. The possession, sale and/or use of narcotics or other illegal substances or firearms by Contractor employees are strictly prohibited in all Smithsonian facilities and leased space. Contractor employees are strictly prohibited from working on the project under the influence of alcohol and/or illegal substances. Contractor employees in violation of any of the above prohibitions will be removed from the project

PROJECT COORDINATION

18. COORDINATION OF TRADES

18.1. The Contractor shall coordinate work of different trades so that interference between mechanical, electrical, architectural, and structural work, including existing services, will be avoided.

18.2. Where work by separate entities requires off-site fabrication of products and accurate interfacing of materials to produce the required results, the Contractor shall prepare coordination drawings to indicate how work shown on separate shop drawings will be interfaced, intermeshed, and sequenced for installation. Coordination drawings shall be submitted in accordance with the requirements of the "Submissions" section.

18.2.1. Work installed prior to approval of coordination drawings shall be at the Contractor's risk. Subsequent relocations required to avoid interferences shall be made without additional expense to the Smithsonian. If interference develops, the COTR will decide which work shall be relocated, regardless of which was installed first.

18.3. Installation of equipment and systems shall allow the maximum practical space for operation, repair, removal, and testing, within the limits indicated on the Contract Documents. Pipes, conduit, ducts, and other system components shall be installed as close as possible to ceiling slabs, walls, and columns to minimize space used while accommodating function and maintenance.

19. QUALITY ASSURANCE

19.1. The Contractor shall provide qualified site personnel responsible for quality control, inspections, testing and re-testing as necessary for all work, including that of Subcontractors, to assure compliance with the contract documents.

19.2. Testing Requirements: Except as specifically stated otherwise, the Contractor shall be responsible for all field sampling and in-place testing required by the contract documents.

19.2.1. Independent Testing Laboratory: The Contractor shall provide an independent, commercial testing laboratory to perform all sampling and testing services required, unless otherwise specified. The testing services shall be on- or off-site as required. Submit complete documentation of all tests performed in connection with the construction contract.

19.2.2. Smithsonian Acceptance of Laboratories: Except for factory tests, all field sampling and testing normally performed by commercial laboratories shall be performed by an independent commercial laboratory employed by the Contractor and accepted by the COTR. The Contractor shall submit the following information to the COTR for approval:

19.2.2.1. Name, registration number and engineering discipline of the Registered Professional Engineer in charge of the laboratory.

19.2.2.2. Affidavit of compliance and certification that the laboratory performs work in accordance with requirements as stated in the contract documents.

19.2.2.3. A list of testing equipment proposed for each test procedure including latest calibration data.

19.2.2.4. A copy of the latest Laboratory Inspection Report by an independent agency with laboratory certification that deficiencies (if any) have been corrected.

19.2.2.5. Names and qualifications of persons performing testing and sampling. Changes in personnel shall be approved by the COTR prior to performance of work under this contract.

19.2.3. Test Results: Test results shall cite the contract requirements; the test or analytical procedures used the actual results and include a statement that the item tested or analyzed conforms or fails to conform to specification requirements. The cover sheet for each report shall be conspicuously stamped in large red letters "CONFORMS" or "DOES NOT CONFORM" to the specification requirements. All test reports shall be signed by a testing laboratory representative authorized to sign certified test reports. The Contractor shall arrange for immediate and direct delivery of the signed reports, certifications and other documentation to the COTR.

19.3. Documentation: The CQC shall prepare or assist with the preparation of the

following documents:

19.3.1. Daily Reports: The Contractor's Daily Report, as discussed in the section Contractor Correspondence and Daily Reports, shall be signed by the CQC Representative as well as the Superintendent. The CQC Representative's signature certifies that, to the best of his or her knowledge, the report is complete and correct and that all materials, equipment and work described on the report are in compliance with the contract plans and specifications, except as noted otherwise.

19.3.2. Special Inspection and Documentation: Reports of Special Inspections shall be signed by both the CQC Representative and the CQC Specialized Supplemental Person who witnessed the test or inspection certifying compliance with the specific contract requirement.

19.3.3. As-Builts: The CQC Representative shall ensure that all requirements for as-built record drawings and specifications are met. The CQC Representative or Specialized Supplemental Personnel assigned to inspect that portion of work shall initial each as-built drawing or technical specification section to certify its accuracy prior to submission in accordance with the Project Close-Out Requirements section.

19.4. The Contractor shall provide for quality control, inspections, testing, and re-testing as necessary for all work, including that of subcontractors, to assure compliance with the contract documents.

20. CODES

20.1 All work must be compliant in accordance with all applicable codes.

21. PERMITS, LICENSES, & FEES

21.1. The Contractor shall obtain and pay for all applicable permits and licenses required by D.C. regulating agencies.

21.2. The Contractor shall pay all duties, fees, taxes, and other charges and give all notices necessary and incidental to the due and lawful execution of the work.

21.3. The Contractor shall keep the Smithsonian indemnified against all penalties and liability for breach of provisions of any national, provincial, district or city statute, ordinance, or law and the regulations and by-laws of any local or other duly constituted authority which may be applicable to the Work and with such rules and regulations of public bodies and companies.

21.4. Accessibility for Physically-Disabled Persons. The Contractor's shall provide temporary constructions at the site as necessary to maintain access for physically disabled persons. All provisions for temporary access shall be subject to the approval of the COTR.

22. UTILITY SERVICE INTERRUPTIONS AND NEW CONNECTIONS

22.1. Any planned interruption in utility service must be approved by and coordinated through the COTR. The Contractor shall submit a written request as far in advance of scheduled

interruption as possible, but no less than two full working days in advance. The Contractor shall make the necessary temporary provisions to supply continuous electrical power, HVAC space conditioning, and security as required during periods when service is interrupted.

22.2. Work shall be coordinated to minimize the number and duration of outages.

22.3 All planned shutdowns and outages must occur between the hours of 6:00 p.m. to 6:00 a.m., unless otherwise approved by the COTR.

22.4. The Contractor's work efforts to restore service shall be continuous until the interrupted utility is back in service.

225 A fire watch shall be provided for the time periods when fire suppression and detection systems are out of service.

23. CUTTING, PATCHING, AND MATCHING EXISTING WORK

23.1. Existing work shall be cut, drilled, altered, removed, or temporarily removed and replaced as necessary for performance of work under the contract. Work that is replaced shall match similar existing work. Structural members shall not be cut or altered, except where noted on drawings, without authorization of the COTR. Work to remain in place that is damaged or defaced during this contract shall be restored to match the conditions existing at the time of award of the contract, at no additional cost to the Smithsonian.

23.2. Conditions exposed by removal of existing work that do not match new finishes or align with new work shall be called to the COTR's immediate attention. Necessary corrective work directed by the COTR will be subject to adjustment provisions as stated in the General Conditions of the contract.

PROTECTION OF THE SITE DURING CONSTRUCTION

24. PROTECTION OF THE SITE

24.1. The Contractor shall provide adequate protection for all parts of the building, including interior and exterior surfaces, its occupants and contents, and grounds wherever work under this contract is performed.

24.2. Plan for Protection of the Site: The Contractor shall submit a plan for protection of the site to the COTR for approval. As a minimum, the Plan shall describe:

24.2.1. Proposed method, location, and construction of temporary enclosures.

24.2.2. Routes of access and egress, including those for people with disabilities.

24.2.3. Location and maintenance of emergency exits.

24.2.4. Methods of protection of existing surfaces and occupants.

24 .2.5. Means of connection of temporary enclosures/surfaces to existing historic materials.

24.3. Temporary enclosures shall be constructed to prevent unauthorized access or egress. Dust and fume barriers shall be constructed, as needed or as determined by the COTR, to seal and isolate the work area from the remainder of the interior areas while the work is in progress. Wood used for protection of the site shall be pressure-impregnated, fire-retardant. All plastic sheeting shall be fire retardant 6-mil polyethylene. Submit product data to the COTR for review and approval. All wood shall be painted that is visible to the public.

24.4. The Contractor shall submit information describing the proposed construction of temporary enclosures and methods of installation to the COTR for approval. Any connections to existing structures must be accomplished in such a way as to minimize disturbance of existing surfaces. All work areas shall isolate from public area with fence and netting.

25. PROTECTION OF FLORA AND FAUNA

25.1. Flora Protection: The Contractor is expressly prohibited from collecting plant materials on Smithsonian property.

25.2. The Contractor shall not store materials inside the dripline of trees or shrubs. Prior to the start of the work on site, the Contractor shall surround trees within the project site and adjacent areas with a protective fence ("snow fence"), 1.4 m high (minimum), 300 mm outside the drip line (minimum). The protective fencing shall be constructed of heavy-duty metal posts or pressure-treated 100 mm X 100 mm wooden posts, 1 m on center, with a top and bottom stringer of 50 mm X 100 mm members. The fencing fabric shall consist of 40 mm X 13 mm slats, pressure treated.

25.3. Vehicular traffic inside the dripline of trees, on turf areas, or on flower beds is not permitted without prior approval of the National Zoo's Department of Horticulture through the COTR. If flower beds must be crossed by vehicles, beds shall be bridged using 100 mm thick timbers to help prevent compaction of the soil in the flower beds. The Contractor must first plank any turf area used for parking.

25.4. Where aerial work is being performed above shrub/flower beds, the Contractor shall protect them with an approved protective framework installed at least 300 mm above the tops of the plant materials. The Contractor shall submit the proposed method of protection to the COTR for approval. Trees and shrubs shall only be tied back with the approval of the COTR.

25.5. Any damage to the existing irrigation systems during construction shall be repaired by the Contractor within two calendar days of when the damage occurred. All damaged irrigation piping shall be cleared of debris prior to making the connections The Contractor shall bear all costs for repairs to the irrigation systems and for replacement of damaged plant materials. Replaced plant materials shall meet the criteria established by the National Zoo's Department of Horticulture.

25.6. Plant material removed by the Contractor for re-use shall be balled, bagged, and protected in accordance with instructions

25.7. Turf areas damaged during construction shall be repaired by the Contractor by roto-tilling a minimum depth of 6 inches, backfilling with sandy-loam topsoil and installing certified Kentucky Bluegrass sod, consisting of a minimum of three varieties of Kentucky Bluegrass, a minimum of one year old. The Contractor shall bear all costs for these repairs.

25.8. The Contractor shall be responsible for the daily removal of trash and construction debris from turf and flower/shrub beds within the limits of construction.

25.9. Any plant material destroyed and/or damaged by the Contractor during construction shall be replaced with like genus and species of the same size, at no additional cost to the Smithsonian. The damaged plant materials must be replaced prior to final payment.

25.10. Any construction scaffolding on planted beds must be coordinated with the COTR to ensure that its installation will not damage or destroy existing plant materials or turf area or interfere with daily maintenance of the grounds.

26. DEBRIS CONTROL AND DAILY CLEANUP

26.1. The Contractor shall regularly clean up the work areas and shall at all times maintain the project in as neat and orderly a manner as is consistent with normal operations. Debris resulting from construction operations shall be removed from the site daily by the Contractor in such a manner as to prevent spillage on streets or adjacent areas. The Contractor shall keep all access, haul routes, and site areas free of dirt, debris, and other materials resulting from construction activities.

26.2. Under no circumstances shall any rubbish or waste be dropped or thrown from one level of scaffolding to another or within or outside the building. Rubbish may be lowered by way of chutes, taken down on hoists, or lowered in receptacles.

26.3 In addition to a general daily clean-up and removal of rubbish, the Contractor shall immediately prior to final inspection for completion and acceptance, or when directed by the COTR, have all surfaces swept and dusted, and all finished surfaces washed and in a new appearing condition with all stains, soil marks, dirt and other forms of defacement removed.

26.4. Trash receptacles: The Contractor shall provide enclosed trash receptacle(s) in quantity and size necessary to meet project needs, located as approved by the COTR.

26.5 Refer to -Construction Waste Demolition Waste Tracking Sheet, following section 010000. The Contractor shall recycle, salvage or otherwise divert from landfills and incinerators, at least 50%, with a goal of at least 75%, by weight (tons), unless otherwise noted, of non-hazardous construction and demolition material. The contractor shall track recycling efforts and diversion rates using the Construction and Demolition Waste Tracking Sheet, attached. Before any work is started, the contractor shall submit a Construction Waste Management Plan, consisting of waste identification and a waste reduction work plan. Waste identification shall indicate anticipated types and quantities of demolition, site-clearing, and construction waste generated by the Work. Include estimated quantities and assumptions for estimates. Waste reduction work plan shall list each type of waste and whether it will be salvaged, recycled, or disposed of in landfill or incinerator. Include points of waste generation, total quantity of each type of waste, quantity for each means of recovery, and handling and transportation procedures. With each application for payment, the contractor shall submit the Construction and Demolition Waste Tracking Sheet, attached, with data compiled for the payment period, including receipts from hauler or destination. Before request for substantial completion, the contractor shall submit calculated end-of-Project percentage of waste diverted from landfills and incinerators (recycled, salvaged, or disposed) as a percentage of total waste generated by the Work. With request for final payment, the contractor shall submit actual percentage of waste diverted from landfills and incinerators (recycled, salvaged, or disposed) as a percentage of total waste generated by the Work.

26.6 All food and food wrappings brought on the premises must be properly disposed of in approved containers that are secured from animals and pest.

27. DUST AND AIR QUALITY CONTROL

~~27~~.1 The Contractor will execute the Work by methods that minimize dust, vapors and gases raised by construction operations. The Contractor will utilize engineering controls and work practices to prevent airborne dust, vapors, gases and objectionable odors from dispersing into the atmosphere and from being drawn into existing air-intake louvers, ductwork, and adjacent elevator shafts. A work plan of methods and means for this section shall be submitted to the COTR for review and approval.

27.2. Dust barriers shall be erected, where necessary, to protect adjacent areas from dust infiltration as required by the COTR. Dust barriers shall be rigid and visually opaque and shall seal the work area by affixing to the structure on all sides (i.e. ceiling, walls and floor). Wood used for dust barriers shall be pressure-impregnated, fire-retardant treated lumber. All plastic sheeting shall be fire-retardant 6-mil polyethylene. Submit product data for review and approval to the COTR.

27.3. Means of connection of dust barriers to existing structures shall not damage the building fabric. Details of barriers shall be submitted for approval to the COTR.

27.4. No open fires or burning of trash are permitted.

27.5 Dust control during concrete and rock wall work shall comply with OSHA silica standard and should be included in Contractor's safety plan.

28. NOISE CONTROL

28.1. The Contractor shall comply with the regulations of the District of Columbia and OSHA Standard 1926.52 and 1910.95 and all other regulations relative to safety noise control.

28.2. Activities that generate excessive noise or vibration and interrupt Zoo functions or create public disturbances may be required to be performed during off-hours at the discretion of the COTR.

28.3. Contractor shall work with the COTR to minimize noise to the animal. All operation that generate noises will require pretesting and approval for animal impacts.

29. VERMIN, PEST, AND RODENT CONTROL

29.1. The Contractor shall use non-chemical means and practices, which deter or prevent the introduction of pests into the project site or premises.

30. DRILLING, WELDING, AND CUTTING

30.1. Daily Permit: When welding, torch cutting or other heating operations are to occur inside existing structures, the Contractor shall obtain a daily HOT WORK PERMIT.
During the Work, all existing smoke and heat detectors and sprinklers heads must remain operable. Coverings may be applied to protect them from spray coatings or other hazardous conditions only during the actual operations. Coverings must be removed immediately after the operations have concluded, but at the end of each working day at a minimum. When work produces dust or other airborne contaminants, e.g. spray painting, that could impair existing fire suppression or detection system(s) or when the system itself is otherwise impaired (drained down, etc.), the Contractor shall obtain a daily FIRE SYSTEM IMPAIRMENT PERMIT.
Each permit must be obtained at least two working days in advance from the COTR and posted at the job site prior to beginning the scheduled work.

30.2. Fire Watch: No welding or torch cutting shall be performed unless adequate fire protection is provided. The Contractor shall maintain a fire watch for the duration of welding, cutting, and heating operations and for at least 30 minutes after the 'hot' work has stopped. The Contractor shall provide adequate ventilation to prevent air contamination or the accumulation of toxic materials. A fire extinguisher (minimum 10 pounds, dry-chemical type, typical) shall be on hand when drilling, welding, or cutting.

30.3. Use of Impact Hammers: The use of impact hammers or other equipment causing vibration, noise, and dust may be harmful to Zoo animals and/or building occupants. The Contractor shall request approval from the COTR at least five working days before beginning this type of work.

TEMPORARY CONSTRUCTION FACILITIES

31. STAGING, STORAGE, AND WORK AREAS

31.1 Staging and Storage Areas: The Contractor shall coordinate with the COTR the use of any area proposed for staging and storage of materials and equipment at least five working days prior to mobilization or at the Preconstruction Meeting, whichever is first.

31.2 The Contractor shall provide adequate storage and protection of materials and equipment delivered to the site to prevent theft, weather damage, or other physical damage. The site shall be maintained in a neat and orderly manner as to further minimize hazards to personnel, animals, visitors, materials and equipment.

31.3 Plan for Staging, Storage& Work Areas: The Contractor shall submit a drawing of areas proposed for construction operations for approval by the COTR at least five (5) working days prior to mobilization or at the Preconstruction Meeting, whichever is first. The drawing shall show buildings, utilities, temporary toilet facilities, temporary utility extensions, temporary interior walls and barriers to limit unauthorized intrusion and to control noise and dust, pedestrian walkways, vehicular access, temporary fencing, trailers, sheds, storage areas and the Contract's desired route for access and egress to the premises and to the project site.

31.4. All wood used for temporary, interior construction shall be pressure-impregnated with a "Dricon" treatment or an equal treatment approved by the Smithsonian Institution AND Zoo. All pieces must bear the UL "FR-S" stamp. Intumescent (fire-retardant) paint shall not be used.

31.5. Fencing: The Contractor shall install a standard chain-link construction fence to define the temporary work limits for construction around exterior staging, storage, and work areas at no additional cost to the Smithsonian. Green tennis netting is required to all areas visible to the public.

32. SANITARY/TOILET FACILITIES

32.1. Contractors' personnel will be permitted to use designated the public restrooms located on the premises, subject to the regulations and control of the COTR. If, in the opinion of the COTR, the Contractors' personnel fail to maintain acceptable dress and conduct appropriate to a public place, permission to use the public restrooms may be rescinded.

33. WATER AND ELECTRICITY AVAILABILITY

33.1 Water and electricity are available on the premises. Use must be coordinated with the COTR.

34. PROJECT SIGNS

34.1. Construction Site Information and Direction: Informational signs required to indicate the location of the Contractor's office and directional signs for safety, vehicular control, pedestrian right-of-ways, detours to facilities, etc. shall be furnished and installed by the Contractor as requested and approved by the COTR.

MEETINGS

35. PRECONSTRUCTION CONFERENCE

35.1. A Preconstruction Conference will be scheduled for the project with the Contractor before any work is started at the site. As soon as possible after the Date of Award, the COTR will contact the Contractor to arrange a time, date, and place for the conference. Items to be discussed at the Preconstruction Meeting include, but not are limited to:

35.1.1. Contract Time: Notice to Proceed date and Completion date

35.1.2. Scheduling and Submittals

35.1.2.1. Progress Schedule

35.1.2.2. Payment Breakdown Schedule

35.1.2.3. Required Submittals

35.1.3. Sequence of Construction

35.1.4. Mobilization and Staging Area for Materials and Equipment

35.1.5. Access to the Premises, Haul Routes, Loading Areas

35.1.6. Contractor Deliveries

35.1.7. Security Requirements/List of Contractor's Personnel

35.1.8. Emergency Procedures and Phone Numbers

35.1.9. Protection of Premises

35.1.10. Fire Protection, Safety and Health Requirements

35.1.11. Utility Interruptions, Rough-in Inspections, Testing

35.1.12. Applications for Payment

35.1.13. Pre-Condition Survey of the Site

35.1.14. Accessibility Requirements

35.1.15. Quality Assurance and Inspection of the Contract Work

35.2. All the Contractor's staff and Subcontractors or Suppliers whose presence is necessary or requested by the COTR shall attend the Preconstruction Meeting.

35.3. Coordination Plan: The Contractor shall use the Preconstruction Conference to develop a Coordination Plan for interaction with other parties working in or using the facility. The plan shall be submitted no less than five working days after the Preconstruction Conference, and shall address interactions with other contractors, tenants, the public, and any others making use of the site and surrounding areas. As a minimum it shall include:

35.3.1. Locations of overlap in use of the site by the Contractor and others, including work areas, delivery points, access/egress areas.

35.3.2. Specific items of work by others required to support critical milestones in the Contractor's schedule.

35.3.3. Completion or delivery of work by others that may impact the Contractor's schedule.

35.3.4. Portions of the work that create special hazards or disturbances.

35.3.5. Portions of the work that affect utilities, fire-protection or detection systems, or security systems.

35.3.6. Events requiring access to areas outside of the project site or secured spaces.

35.3.7. Protection to be provided by the Contractor for work completed by others either before or during this project.

36. PRE-CONDITION SURVEY OF THE SITE

36.1. After the Preconstruction Meeting and before the start of work on the site, the project site (i.e. buildings, yards, and their contents, grounds, and equipment) shall be inspected by the Contractor, major Subcontractors, COTR, and other National Zoo personnel as may be required

for the purpose of verification of the existing conditions. Any damages or defective equipment will be noted at this time, and this survey will serve as the basis for the establishment of the pre-construction conditions. The identification of pre-construction conditions will be jointly established by the Contractor and Smithsonian Institution.

36.2 Any damage to the buildings, yards, their contents, grounds, or equipment that occurs during the contract period, unless noted as existing during the inspection as specified above shall be repaired to its pre-contract condition by the Contractor at no cost to the National Zoological Park. The COTR will determine the adequacy of the repairs as required in the previous paragraph.

36.3 Written and photographic documentation: The Contractor shall prepare a typewritten and photographic report in PDF format to identify damages or defects of materials, equipment and the site. The Contractor shall submit report electronically to the Contracting Officer and the COTR.

37. PROJECT MEETINGS

37.1. Progress Meetings: The COTR will lead regular progress meetings with representatives of the Contractor, Smithsonian, Architect/Engineer (as required), major subcontractors, and other critical subcontractors and suppliers. The purposes of these meetings are to expedite the work, coordinate and schedule the Work, and coordinate the work with Smithsonian activities. Progress meetings shall be held weekly unless otherwise directed by the COTR. The time and place of the meetings will be established at the Preconstruction Meeting. The Contractor shall insure that all required subcontractors and suppliers attend the Progress Meetings and the COTR will ensure that all necessary SI personnel attend.

37.2. Special-Topic Meetings: At the discretion of the COTR, separate meetings may be scheduled to address issues of quality assurance, coordination with other contractors on the premises, coordination with other agencies, scheduling of the work, application for payments, etc. The Contractor's staff and Subcontractors or Suppliers whose presence is necessary or requested by the COTR shall attend.

37.3. Meeting Minutes: The Contractor shall promptly prepare minutes of each meeting and send two copies to the COTR within five working days.

SUBMISSIONS

38. SUBMITTAL DEFINITIONS

38.1. Submittals are defined to include shop drawings, product data, samples, and additional data required for submission to the COTR for review and approval prior to incorporation into the work.

38.1.1. Shop Drawings: Detailed drawings, schedules, diagrams, and illustrations prepared specifically for this project by the Contractor, or any subcontractor, manufacturer, supplier, or distributor to illustrate fabrication and/or installation of a portion of the Work.

38.1.2. Schedule: A detailed tabulation of components, items, or parts to be furnished for use on this project.

38.1.3. Statement: An affirmation prepared by the Contractor, the installer, or manufacturer of a material, product, or system, to satisfy a requirement defined in a technical section.

38.1.4. Factory Test Report: A written report of the findings of a test performed by the Contractor on an actual portion of the Work or prototype prepared for this project before it is shipped to the site.

38.1.5. Field Test Report: A written report of the findings of a test performed by the Contractor on a portion of the Work during or after installation.

38.1.6. Certificate of Compliance: A written statement, signed by an authorized official of the manufacturer of a product or system or supplier of a material attesting that the product, system, or material meets the requirements of the contract documents. The certificate of compliance must be dated after the award of this Contract and must name the project and cite the specification section, paragraph, and requirements that it is intended to address.

38.1.7. Product Data: Illustrations, standard schedules, performance charts, instructions, brochures, diagrams, manufacturer's descriptive literature, and catalog information illustrating a material, product, or system to be installed on this project.

38.1.8. Color Charts: Pre-printed brochures showing the color range of a material.

38.1.9. Test Reports: Reports verifying that a material, assembly, system, process, or laboratory meets requirements established in the Contract Documents. Reports shall indicate compliance by naming and describing the test method and test results. Testing must have occurred within three years of the date of award of this contract.

38.1.10. Samples: Physical examples of materials, equipment, assemblies, or workmanship establishing standards for evaluating finished Work.

38.1.11. Color/Texture Selection Sample: Samples of an available range of textures and/or colors of a material formed of the actual finish material over a substrate identical to that which will be used in the field.

38.1.12. Mock-up: An assembly or sample panel constructed in accordance with specifications to show construction details, finished appearance, and/or performance.

38.1.13 Material Safety Data Sheets: Instructions, warnings, and recommended and required handling and use procedures for individual hazardous materials published by the product manufacturer.

39. SUBMITTALS AND REVIEWS

39.1 Contractor Responsibility for Submittals: The Contractor shall provide all required submittals, by technical specification section, in accordance with the contract documents at least two (2) weeks before their expected use. All samples require written approval by the COTR prior to use on the job. Samples will be returned to the Contractor and, if approved, may be used in the work.

39.2 The Contractor shall clearly indicate on the submittal that it has been reviewed by the Contractor and found to meet the project requirements. Any items submitted as substitutions shall be clearly identified as such on the submittal and the transmittal document. If shop

drawings show variations from the contract documents because of standard shop practices or for other reasons, the Contractor shall provide a separate, written description of variations along with the submittal. The Contractor shall:

39.2.1. Review each submittal for conformance with requirements of the contract documents and coordination with related work.

39.2.2. Determine and verify all field measurements, required material quantities, method of assembly or erection, installation requirements, and proper connection to adjoining materials installed by others.

39.2.3. Assure that all submittals use the appropriate units of measure. All drawings and technical data shall be in SI (metric) units for projects designed in SI units. Preprinted literature in other units shall be accompanied by documentation to show conformance to project requirements.

39.2.4. Transmit all required submittals for a technical specification section at the same time unless prior written waiver of this requirement has been provided by the COTR.

39.2.5. Transmit submittals to the COTR in a logical and orderly sequence in accordance with the Submittal Schedule to prevent project delays or adversely impact work by the Smithsonian Institution or other contractors.

39.2.6. Correct and resubmit submittals according to response from Smithsonian Office of Engineering Design & Construction.

39.2.7. Commence work on items requiring submittals only after all related submittals are reviewed and approved by the Smithsonian. All Work shall conform to approved submittals.

39.3. Submittal Schedule and Control Log: The Contractor shall submit to the COTR a schedule of work-related submittals using the Smithsonian OFEO Submittal Log form within 14 calendar days after the effective date of the Notice to Proceed. (Submittal Log form is available on computer disk upon request.) Submittals shall be listed in the order they are scheduled to be submitted and the following information shall be given:

39.3.1. Project Name, Project Number, Contractor Name, Contract Number

39.3.2. Technical Specification Section for each submittal

39.3.3. Unique Submittal Number

39.3.4. Description of item to be submitted, as listed in the specifications

39.3.5. Date item must be submitted to the Smithsonian in order to support the project schedule.

39.3.6. Subcontractor providing submittal (in "Comments" column)

39.4. Quantities for Submittals: Unless otherwise noted in the technical specification, the Contractor shall deliver to the COTR:

39.4.1. Shop Drawings: Submit one pdf for black line prints. After submittal review, and the reproducible will be returned to the Contractor.

39.4.2. Product Data, Test Reports, Color Charts, etc.: Submit eight copies of each submittal. After submittal review, three copies will be returned to the Contractor.

39.4.3. Color/Texture Samples: Submit two samples, minimum size 600 mm by 600 mm, unless otherwise specified. After submittal review, the Smithsonian may retain one sample.

39.4.4. Mock-up and Sample Installations: Unless otherwise specified, minimum size shall be as noted to complete a panel section or normal break in the work.

39.4.5. Written Text Documents, Plans, and Reports: Submit pdf copy with complete attachments, if any.

39.5. Submittal Reviews by the Smithsonian: Reviewed submittals will be marked "Approved", "Approved as Noted", "Resubmit", or "Disapproved". Submittal approval by the Smithsonian shall not relieve the Contractor of responsibility for submittal errors, omissions, or deviations from the contract documents. Approval of submissions does not constitute acceptance of substitutions except as covered under sub-paragraph entitled "Contract Requests for Substitutions".

39.6. Construction Progress Schedule Submittal: The Contractor shall submit a progress schedule within one (1) calendar day from the date of the Notice to Proceed. No work shall start at the site until the progress schedule has been approved by the COTR. The schedule shall provide a weekly breakdown of activity including interaction between trades and be subdivided in accordance with items of work or areas of the job where the work is to take place. The schedule shall also list equipment, special devices, hardware, products or other items requiring long lead time, when these items are ordered and the projected delivery dates. The last week of the schedule shall reflect final inspection, testing, and the correction of deficiencies.

39.7. Submittal Review Period: The Contractor shall transmit to the COTR all submittals sufficiently in advance of the time necessary for fabrication and installation to allow for review by the Smithsonian and return to the Contractor, including any time needed for correction and resubmission by the Contractor. The expected time required by the Smithsonian for review of initial submission is 14 calendar days. No extension of the Contract Time will be granted for the Contractor's failure to allow enough time for review and processing, including resubmission of items that were initially rejected due to improper submission or non-compliance with the Contract Documents.

39.8. Contractor Requests for Substitutions: Contractor requests for items identified by manufacturer, brand name, make, catalog number, etc. in the contract documents shall be submitted to the Contracting Officer for approval prior to contract award, in accordance with the General Conditions. After award of the contract, contractor requests for substitutions may be considered and accepted by the Smithsonian at the discretion of the Contracting Officer.

40. CRITERIA FOR PRODUCT SELECTION

40.1. To the greatest extent possible, subject to the restrictions of the Buy American Act, provide products, materials, or equipment of a singular generic kind from a single source. Where more than one choice of a product or material is available for Contractor's selection, select an option that is compatible with other products and materials already selected.

40.2. Provide products complete with accessories, trim, finish, safety guards, and other devices and details needed for complete installation for intended use and effect.

40.3. Products that, by nature of their application, are likely to be needed at a later date for maintenance and repair or replacement work, shall be current models for which replacement parts are available.

40.4. Product selection shall be done in accordance with the following requirements:

40.4.1. Standards, Codes, and Regulations: Select from among products that are in compliance with the project requirements, as well as with construction standards and all applicable codes and regulations.

40.4.2. Performance Requirements: Provide products that comply with specific performances indicated and are recommended by the manufacturer (in published product literature or by individual certification) for the application indicated.

40.4.3. Prescriptive Requirements: Provide products that have been produced in accordance with prescriptive requirements, using specified ingredients and components, and complying with specified requirements for mixing, fabricating, curing, finishing, testing, and other operations in the manufacturing process.

40.4.4. Visual Matching: Where matching with an established sample for color, pattern, and/or texture, the COTR shall determine whether a proposed product matches the sample.

41. CONTRACTOR CORRESPONDENCE AND DAILY REPORTS

41.1. The Contractor shall correspond with the COTR for all matters related to this construction project, unless otherwise directed. All correspondence shall be signed and dated by the Contractor and shall reference the project, project number, and contract number.

41.2. The Contractor shall maintain daily reports using the Smithsonian Institution Contractor's Daily Report form. Reports shall be numbered consecutively, and all sections shall be completed or noted as "not applicable." Reports shall contain detailed remarks each day, including but not limited to progress on the job, problems discovered, and discussions with Smithsonian staff. Reports shall be submitted to the COTR each day for the previous workday.

SAFETY, HEALTH, AND FIRE PROTECTION

42. JOB-SITE SAFETY

42.1. Safety Coordinator: The Contractor shall designate a person responsible and accountable for personnel safety at both corporate and project level at the project site for the duration of the project. Contracts specifically requiring safety or industrial hygiene personnel shall include a copy of their resumes. Qualifications for the Safety Coordinator shall include the OSHA 30-hour course or equivalent course.

42.2. Job-Site Safety Plan: The Contractor shall submit a Job-Site Safety Plan within 15 calendar days of the Contract Award and at least 15 calendar days prior to mobilization to the site for approval by the COTR. As a minimum, the plan shall detail the procedures, designated persons, instructions, and reports to be used to assure job-site safety for all contractors, sub-contractors, Smithsonian personnel, the public, and others on the site.

42.2.1. Site Specific Safety Plan (For Project value $100K and above): Upon award of this contract, the contractor shall provide a Site-Specific Safety Plan (SSSP). The SSSP is a safety and health policy and program document and outlines how the contractor will safely conduct their work. This plan shall be job-specific and shall also address any unusual or unique aspects of the project or activity for which it is written. The SSSP shall interface with the employer's overall safety and health program, and a copy shall be available on the work site. Any portions of the employer's overall safety and health program that is referenced in the SSSP shall be included as appropriate. The plan shall include but not limited to the following:

a. Signature Sheet that must include plan concurrence (e.g., Chief of Operations, Corporate Chief of Safety, Corporate Industrial Hygienist, project manager or superintendent, project safety professional, project QC). Provide concurrence of other applicable corporate and project personnel (Contractor).
b. Background Information that must include Brief project description, description of work to be performed, and location; phases of work anticipated these will require a Job Hazard Analysis (JHA's). OSHA 3071
c. Statement of Safety and Health Policy
d. Responsibilities and lines of Authority
e. Dust control plan during concrete and rock wall work that complies with OSHA silica standard.
f. Subcontractors and Suppliers
g. Training
h. Safety and Health inspections that include assignment of responsibilities for a minimum daily/weekly job site safety and health inspection during periods of work activity level of technical proficiency needed to perform the inspections, proof of inspector's training/ qualifications
i. Accident Reporting
j. Plans (programs, procedures) required by the Safety Manual. Based on a risk assessment of contracted activities and on mandatory OSHA compliance programs, the Contractor shall address all applicable occupational risks and compliance plans. Using the 29 CFR 1926 and/or current and accepted procedures in the EM 385-1-1 as a guide.
k. Risk Management Processes Detailed project-specific hazards and controls shall be provided by a Job Hazard Analysis for each major phase/activity of work, including but not limited to work involving confined space, fall protection, trenching/excavation, crane/rigging, steel erection, hot work, protection of the public, scaffolding, and other activities that involve high risk potential.

42.3. Occupational Safety and Health: This contract is subject to Title 29 of the Code of Federal Regulations, Part 1910 "Occupational Safety and Health Standards" and Part 1926 "Safety and Health Regulations for Construction" pursuant to the Occupational Safety and Health Act (OSHA) of 1970 administered by the US Department of Labor, Occupational Safety and Health Administration. Copies of current Occupational Safety and Health Act standards are available from regional offices of the U.S. Department of Labor, Occupational Safety and Health Administration.

42.4. Emergency Assistance: The Contractor shall post at the site telephone numbers for reporting emergencies, including the National Zoo's Police Station, ambulance, police, fire

department, gas utility, electric utility, water/sewer utility, poison prevention aid, and hazardous-waste handling. This information shall be posted in a conspicuous location within the project area prior to the start of any work at the site.

42.5. Safety Signs: The Contractor shall post legible accident prevention signs in construction areas in accordance with OSHA standards. Safety signs shall conform to ANSI 235.1 and 235.2 Vehicular traffic control devices, barricades, and signals shall conform to ANSI D6.1.

42.6. Report of Accident or Illness: In the event of any accident or illness for which medical assistance is required, any criminal action, or any fire, the Contractor shall notify the appropriate authority (ambulance, police, fire Dept.), Smithsonian Security, and the COTR.

42.7. Emergency Evacuation: The Contractor shall post evacuation routes and facility emergency/self-protection plans at the site and train all employees in emergency procedures. In the event of a fire, the Contractor shall immediately activate the alarm at the nearest fire alarm pull station and notify building security. Upon the activation of the audible alarm, the building will be evacuated. No personnel shall reenter the facility until security personnel signal that the building is safe.

42.8. Contractor Personnel to be Contacted: The Contractor shall submit a written list of emergency telephone numbers and names of persons to contact for the General Contractor superintendent and for each major sub-contractor working on the project site. The initial list shall be submitted to the COTR at the Preconstruction Meeting. The list shall be updated and resubmitted to the COTR as needed.

43. TOXIC AND HAZARDOUS SUBSTANCES

43.1. The Contractor shall submit to the COTR, at least ten working days prior to their intended use or at the Preconstruction Conference, a written list of all toxic and hazardous substances that will be used on the project. The Contractor shall also submit a "Material Safety Data Sheet" similar to OSHA Form No. 20 for these substances to identify the following information:

43.1.1. Product Identification

43.1.2. Hazardous Ingredients

43.1.3. Physical Data

43.1.4. Fire and Explosion Hazard Data

43.1.5. Health Hazard Data

43.1.6. Emergency and First Aid Procedures

43.1.7. Reactivity Data

43.1.8. Spill or Leak Procedures

43.1.9. Special Protection Information

43.1.10. Special Precautions

43.1.11 Volatile Organic Compound (VOC) Content.

43.2 The Contractor will commit to not using the following toxic and hazardous materials:

43.2.1. Products containing asbestos, urea formaldehyde, polychlorinated biphenyls (PCBs) and/or chlorinated fluorocarbons.

43.2.2. Products containing lead content, including solder or flux containing more than 0.2% lead; domestic water pipe or pipe fittings containing more than 8% lead; and paint containing more than 0.06% lead.

43.2.3. Chlorofluorocarbon (CFC)-based refrigerants in new base building heating, ventilating, air conditioning and refrigeration (HVAC&R) systems and comprehensive CFC phase-outs when reusing existing base building HVAC equipment.

43.2.4. The Contractor hereby understands that historic properties may contain pre-existing harmful materials and coatings including, but not limited to, arsenic, lead, dioxide, polyvinylchloride (PVC) and asbestos. Upon discovery of hazardous or toxic materials, the Contractor shall alert the COTR immediately.

43.3. The Contractor shall monitor the use of all toxic and hazardous substances to ensure that the specified Threshold Limit Values (TLV's) and/or Permissible Exposure Limits (PEL's) are not exceeded. Any equipment or technical measures for this purpose must first be approved by the National Zoo's Safety Office through the COTR. Exposure of the Contractor's personnel and Zoo's employees and visitors to air-borne or any other physical contact with any substance shall not exceed allowable concentrations specified in: Under no circumstances shall exposure exceed the established Short-Term Exposure Limit or 50% of the established Threshold Limit Values or Permissible Exposure Limits (whichever is less) as specified in either:

43.3.1. "Threshold Limit Values and Biological Exposure Indices" of the American Conference of Governmental Industrial Hygienists, and

43.3.2. Title 29 CFR Part 1910, Subpart Z - "Toxic and Hazardous Substances" of the Occupational Safety and Health Standards.

43.4. Exposure of the Zoo's animals to air-borne or any other physical contact with any toxic or hazardous substance will be prohibited.

43.5 All toxic and hazardous substances and materials used by the Contractor must be removed from the Zoo property upon completion of the project.

43.6 The Contractor shall provide methods, means, and facilities to prevent contamination of soil, water, and atmosphere from discharge of noxious, toxic substances and pollutants produced by construction operations. The removal of contaminated waste shall follow applicable laws and regulations.

43.7 To achieve compliance with the requirements of this section, administration or engineering controls shall first be implemented whenever feasible. When such controls are not feasible to achieve full compliance, protective equipment or other protective measures shall be used to keep exposure of all persons within the prescribed limits. Descriptions of equipment or

technical measures to be used for this purpose must be submitted to the COTR for approval. The Contractor's requirements for compliance with all applicable local, federal, and state regulations remain in force.

43.8 The SI may reject any product that poses a high risk of fire or health hazard to staff, visitors or the building, based on flammability criteria (e.g. low flashpoint) or established toxicity data (e.g. designation as a human carcinogen).

44. PERSONAL PROTECTIVE EQUIPMENT

44.1. Personal protective equipment for eyes, face, ears, nose, head, extremities, and/or full body shall be provided, used, and maintained by the Contractor whenever necessitated by reasons of hazards encountered in a manner capable of causing illness, injury, or impairment in the function of any part of the body.

44.2. Persons required to use personal protective equipment shall be thoroughly trained. Training programs shall, as a minimum, meet OSHA and EPA requirements where applicable. The Contractor shall submit proof and criteria for employee training as requested.

45. BARRICADES, BARRIERS, AND WALKWAYS

45.1. The Contractor shall provide safety barricades in accordance with the District of Columbia Building Code and applicable OSHA regulations. The Contractor shall also provide barricades, subject to approval by the COTR, to deter passage of persons and/or vehicles into construction areas as specified or necessary.

45.2. The Contractor shall install temporary barriers, in a manner satisfactory to the COTR, to contain and secure the site from unauthorized entry and to minimize the adverse affects of noise and dust generated by construction activities on surrounding areas. Barriers shall be constructed of fire-retardant treated wood, with fire-retardant 6-mil polyethylene plastic sheeting as necessary.

45.3. If the work interferes with public or employee access to the facility or parts of the facility, as determined by the COTR, the Contractor shall provide personnel barriers and signage to create easily identifiable, accessible (to people with handicaps) walkways around the work. Signs shall be posted at decision points to prevent unnecessary travel along changed routes and to dead ends. The barriers shall be erected and dismantled in phases so that a clear route is always available. The COTR and Contractor personnel shall have access through the barriers to the work areas. The Contractor may use hardware on the barrier doors to prevent entry by unauthorized persons.

45.3.1. Interior barriers shall be of standard drywall partition construction, painted, and terminated at the underside the existing ceiling. All requirements for fire protection shall be maintained.

45.3.2. Exterior barriers shall be of dimensional lumber and plywood, painted on both sides, and supported to prevent overturning. Barriers shall be repainted and maintained as necessary to remain in good condition if they are required.

45.4. Unless specifically indicated otherwise, barricades, barriers, and associated signs shall be removed upon completion of the Work. The Contractor shall coordinate the dismantling and removal with the COTR.

46. EXISTING FIRE PROTECTION SYSTEMS

46.1. During the course of the Work, all existing smoke and heat detectors and sprinklers heads must remain operable. Coverings may be applied to protect them from spray coatings or other hazardous conditions only during the actual operations. Coverings must be removed immediately after the operations have concluded. Damaged detectors and sprinkler heads shall be replaced immediately by the Contractor at no additional cost to the Smithsonian Institution. The Contractor shall test replaced detectors and sprinklers after installation to the satisfaction of the COTR. If the system can not be made operational at the end of the day, then the Contractor shall supply a fire watcher(s) for all after hours time.

SECURITY REQUIREMENTS

47. GENERAL SECURITY REQUIREMENTS

47.1. The Contractor and his/her employees must comply with security requirements imposed by the National Zoo, including any necessary security clearances. Failure to inspect the site or obtain knowledge of security regulations shall not relieve the Contractor from security requirements or from performance of any part of the work.

47.2. Prior to the start of work on the site, the Contractor, after receiving the Notice to Proceed, shall submit to the COTR for approval, a list of the names, social security numbers, and addresses of all employees and subcontractor employees who will be working on the site. The list shall identify the Prime Contractor and each subcontractor and trade. It shall be updated as necessary to accurately identify all workers who will be working on the site during the project.

47.3. The name and telephone number of the Contractor's Superintendent and authorized alternate individual who can be reached on a 24-hour basis shall be provided to the COTR at the Preconstruction Meeting.

47.4 If the Contractor is required to accelerate the work in order to complete the project on schedule, or if other conditions arise as the result of Contractor's management of the work which required that work be accomplished during other than normal operating hours, the Contractor will be required to assume the cost of any additional inspection and guard services at overtime rates.

47.5 Notify the COTR prior to disturbing any alarm wiring, devices, systems, etc. Planned disturbances will be coordinated at least three (3) working days in advance of when the work is scheduled. Any alarm wiring, devices or systems that are disturbed for any reason must be reported to the COTR within five (5) minutes of the occurrence. The COTR will determine the procedures for repairing the damage and who will perform the repair work. The cost of such repairs will be borne by the Contractor.

47.6 The contractor shall provide adequate security to prevent the presence of unauthorized persons on the work site area, and to keep doors secured when not in actual use to ensure the integrity of the barrier as well as for the property security.

47.7 The Contractor is prohibited from hunting, collecting, or feeding animals on Smithsonian property.

47.8 The Contractor is prohibited from feeding, petting or harassing any Zoo animal(s).

47.9 The Contractor shall comply with SI's current COVID requirements.

48. IDENTIFICATION BADGES

48.1. Controlled Access: Contractor employees shall sign in and out with the security officer daily for the duration of the Contract Time. Access to the building will be granted only to Contractor employees who sign the Building Entry and Departure Register at designated entrances and who wear a Contractor Identification Badge or Day Pass in plain view for inspection. Photo identification badges with serial numbers and information about allowed access may be issued by the Smithsonian to some Contractor employees.

48,2. ID Processing: Contractor personnel will be issued identification badges for use while on the premises.

48.2.1. ID badges will be provided by the Smithsonian at no cost to the Contractor. Smithsonian reserves the right to not issue ID badges to those Contractor employees who fail to meet security requirements.

48.2.2. The Contractor shall submit to the COTR a written request for approval of each employee who will be working on site and was not on the original list. Each application must be submitted at least five working days before the employee is scheduled to begin on the project.

48.3. ID Pickup: Contractor's personnel reporting for work shall be required to sign the building entry and departure register and to exchange a driver's license or some other photo identification for the Contractor Identification Badge or Day Pass. The personal identification exchanged for the badge or pass will only be returned to its owner when the credential is returned.

48.4. Accountability for ID: Contractors who are issued an identification badge or day pass are strictly accountable for it and for following established access control procedures. Misuse of the credential, noncompliance with access control procedures, or failure to return the ID badge or day pass upon leaving the premises shall be reported to the COTR.

48.5. Lost ID: If a Contractor or subcontractor employee loses an ID badge or day pass, the Contractor shall report the loss immediately to the COTR. The Contractor shall submit to the COTR, within two (2) calendar days, a written report detailing how, where, and when the credential was lost. A request to the COTR for authorization of a replacement credential, if necessary, shall accompany this report. The Contractor shall bear the cost for replacement of the lost badge or pass.

48.6. Ownership of ID: The Contractor Identification Badge or Day Pass shall remain the property of the Smithsonian and it shall not be taken off the premises. The badge will be issued to the person it identifies when he reports to the work site for duty, and it must be returned to the security guard station whenever the person it identifies leaves the premises.

49. SECURITY OF TEMPORARY OPENINGS

49.1. Any temporary opening in the building perimeter or between non-public and public interior spaces must be closed and secured with means acceptable to the COTR at the end of each workday. A clear and safe path shall be maintained at all times to allow Zoo visitors entrance into the Zoo' parks and buildings. The Contractor shall secure his facilities and equipment during non-working times at his own expense. Authorized Smithsonian personnel shall have access to the work site.

50. EXISTING BUILDING ALARM SYSTEMS

50.1. The Contractor shall notify the Building Security Control Room prior to disturbing any alarm wiring, device, system, etc. The Contractor shall coordinate planned disturbances at least two (2) working days in advance of the scheduled work. Any alarm wiring, devices, or system that is broken or disturbed for any reason must be reported to the Building Security Control Room within three (3) minutes of the occurrence.

50.2. If any system or component is damaged by Contractor employees, the Smithsonian Institution Office of Protection Services will determine the procedures for repairing the damage to existing building alarm systems, and who will perform the repair work. The cost to repair the system and any related overtime costs for Smithsonian personnel shall be borne by the Contractor.

51. NZP POLICE OFFICER DUTY CHARGES

NA

SCHEDULES AND PAYMENTS

52. SCHEDULE OF VALUES

52.1. The Contractor shall submit to the COTR a schedule of estimated values of all parts of the work. The breakdown of costs on the Schedule of Values shall follow the divisions used in the project specifications and shall reflect major items and groups of items shown on the Contractor's project schedule. All values shall be in US dollars.

52.2 Wages: The contractor shall verify wages and comply with regulated wage scales, i.e. Davis-Bacon, Service Contract Act, etc.

53. SCHEDULING & PAYMENTS / CRITICAL PATH METHOD

53.1. CPM Scheduling: The work under this project will be scheduled and reported by the Contractor using the Critical Path Method. The approved Project Schedule(s) shall be used by the Contractor for planning, organizing, executing, and directing the work; for monitoring and reporting progress; and for requesting payment for work completed. All costs shall be identified in US dollars.

53.1.1. Order and Inter-Dependence of Activities: The Critical Path Method will be followed to show the order and interdependence of activities and the sequence in which the work is to be accomplished. Each activity shall be tied to all activities that must logically precede or follow it, and all paths shall be continuous through to completion date(s).

53.1.2. Work Breakdown Parameters for Activities: The activities shown on the network diagram shall include construction activities, submittal processing by the Contractor, submittal processing by the Smithsonian, procurement activities for major equipment, fabrication of special materials and equipment, installation of special materials and equipment, inspections, and tests. All field activities that affect progress toward contractually required dates for completion of all or parts of the Work shall be shown. The level of detail shall be such that the duration of any activity will be no longer than ten (10) working days and no activity will have a dollar value exceeding $15,000, except as allowed by prior and specific approval of the COTR.

53.1.3. Cost-loading of Activities: The Project Schedule shall include a dollar value (cost) for each work activity. The cost shall include labor, materials, equipment, small tools, incidentals, and a prorated portion of overhead and profit. The sum of all activity costs shall be equal to the total Contract Price. Each activity cost shall be coded with a cost code corresponding to a line item on the Schedule of Values.

53.1.4. Computer Software: The Contractor shall use a computerized CPM scheduling software designed for use on IBM type personal computers. The name of the software proposed for use shall be submitted to the COTR, along with literature about the program's capabilities, functions, and operations, demonstrating that the requirements of the entire section entitled "Scheduling of the Work / Critical Path Method" can be met.

53.2.0 Required Schedules: The Contractor shall prepare and submit a Preliminary Project Schedule, Complete Project Schedule, Condensed Summary Schedule, Progress Schedules, and Recovery Schedules as described below.

53.2.1 Project Schedule: Within 14 calendar days after receipt of Notice to Proceed, the Complete Project Schedule shall be submitted to the COTR for review and approval. The Contractor's submission of the Preliminary Project Schedule shall include four (4) copies and one (1) reproducible.

53.2.2. Condensed Summary Schedule: Along with each copy of the Complete Project Schedule, the Contractor shall submit to the COTR for approval a condensed summary version consisting of not more than 250 activities summarizing major work elements.

53.2.3. Progress Schedules: Each month, the Contractor shall prepare a Progress Schedule by inputting all information regarding actual start and actual finish dates, projected through the end of the month, into the computerized Project Schedule. Complete discussion of this requirement is contained in the section "Reporting Progress and Applying for Payment."

53.2.4. Recovery Schedule: If the work falls substantially behind the approved Project Schedule the COTR may require the Contractor to submit a Recovery Schedule in accordance with the Construction Contract Clauses paragraphs relating to "Commencement, Prosecution, and Completion of Work." Upon request, the Contractor shall submit a Recovery Schedule to the COTR for approval within ten (10) working

days. The requirements set forth herein in the sub-paragraph entitled "Complete Project Schedule," shall apply to all activities shown on the Recovery Schedule.

54.3. Schedule Preparation: Schedules shall be prepared and submitted as network diagrams with accompanying reports as described below.

54.3.1. Schedule Report Data: Computer-generated reports from the CPM schedule shall be a tabulation of all activities on the network and may include any of the following information for each activity:

1. Activity number;
2. Activity description;
3. Responsibility for activity (Contractor, Subcontractor, Supplier, Smithsonian, etc.);
4. Total monetary value of activity (TV);
5. Total duration in days (TD);
6. Percentage completed (PC);
7. Contractor's earnings-to-date based on percent of activity completed (ETD);
8. Estimated remaining duration in days (RD);
9. Earliest start date, by calendar day (ES);
10. Earliest finish date, by calendar day (EF);
11. Actual start date, by calendar day (AS);
12. Actual finish date, by calendar day (AF);
13. Latest start date, by calendar day (LS);
14. Latest finish date, by calendar day (LF);
15. Total float time (TF);
16. The Work item from the Schedule of Values used for progress payments of which the activity is a part;

54.3.2 Standard CPM Reports: The following standard reports shall list all activities and the indicated data for each activity, sorted and ordered as described. The Contractor shall provide changes to these reports or creation of additional reports as requested by the COTR at any time.

1. Cost Report - sorted by responsibility, ordered by activity numbers (lowest to highest); including activity numbers, activity descriptions, TV, TD, PC, ETD, RD, and corresponding item number from the Schedule of Values.

2. Activity Report - in order of activity numbers (lowest to highest); including activity numbers, activity descriptions, TD, PC, RD, ES, EF, AS, AF, LS, LF, and TF.

3. Early Start Report - in order of early start dates, further ordered by total float (lowest to highest), then by activity numbers (lowest to highest); including

activity numbers, activity descriptions, TD, PC, RD, ES, EF, AS, AF, LS, LF, and TF.

4. Total Float Report - in order of the amount of total float (lowest to highest), further ordered by activity numbers (lowest to highest); including activity numbers, activity descriptions, TD, PC, RD, ES, EF, AS, AF, LS, LF, and TF; and reflecting all activities having less than ninety (90) working days float.

54.4. Review and Approval of Project Schedules: The Smithsonian will review the Preliminary and Complete Project Schedules within fifteen (15) calendar days after receipt of each. The COTR will then schedule a meeting with the Contractor to review the Schedule and discuss any questions or recommendations the Smithsonian may have. Any revisions required by the COTR shall be submitted for approval within ten (10) calendar days after the review.

54.5. Changes to Project Schedules: During the Contract Period the Project Schedule will be revised and updated to reflect changes to the plan of execution and work progress. Schedule revisions and updates shall be executed and submitted as described below.

54.5.1. Contractor Revisions to Project Schedules: If the execution of the work varies significantly from the Project Schedule or the Contractor desires to make changes to the schedule, the Contractor shall submit a revision of the affected portion to the COTR along with a statement of the reasons for the change. The COTR will review and approve or reject the revision within fifteen (15) calendar days after receipt.

1. If the COTR observes work performed in variation from the approved schedule and considers these changes to be major, the COTR will require the Contractor to submit for review and approval, without additional cost to the Smithsonian, revision of all of the affected portions of the network diagrams along with standard reports to show the effect on the entire project.

2. A change will be considered major if the COTR determines that the change may impact the contract completion date.

3. Changes that affect activities with adequate float time shall be considered minor changes. An accumulation of minor changes will be considered a major change when the cumulative effect modifies the contract completion date. The effect of minor changes on logic shall be shown on each monthly update and described fully in the accompanying narrative report.

54.5.2. Changes Related to Requests for Proposals: For all proposals involving requests for time extensions or other significant changes to schedule, the Contractor shall submit a listing of all the activities affected, added, or deleted (by node numbers). The effect in time and money shall be described for each activity. If, in the opinion of the COTR, the proposed change may impact the completion date(s), the Contractor shall submit a diagram of that portion of the network schedule affected by the changes, along with standard reports for analysis.

1. Diagrams and reports submitted to illustrate the impact of a proposed change shall show the necessary revisions to activities, along with their costs, durations, and trade responsibilities. Failure to submit such a diagram with a proposal shall

constitute a waiver of any claims for time extensions associated with the subject of that proposal.

2. Modification of activity times shall be agreed to by both the Contractor and the COTR. In the event that agreement on modified activity times cannot be reached, the COTR will direct the specific time adjustments to be entered into the program to determine approved, revised, contract completion dates.

54.6. Scheduling Consultant: The Smithsonian reserves the right to retain a scheduling consultant to assist the Smithsonian in performing the Smithsonian functions under this section and will inform the Contractor of its retention of such a consultant in writing. The Contractor will cooperate with the scheduling consultant by furnishing information contractually required to be furnished to the Smithsonian.

54.7. Reporting Progress and Applying for Payment: Each month the Contractor shall apply for payment and submit a report of the actual construction progress as follows:

54.7.1. By the 25th of each month, the Contractor and the COTR shall have inspected the work to determine percentages complete for each item, projected through the end of the month. The parties shall attempt to reach agreement on each item, but if they cannot the COTR will determine percent complete. These percentages shall be input into the latest revision of the Progress Schedule, including all revisions approved to date.

54.7.2. By the last day of the month, the Contractor shall submit an Application for Payment based on the determined percentages complete for each item. The application shall be submitted in triplicate on the Smithsonian standard Application for Payment form. Each copy of the Application for Payment shall be accompanied by the following:

1. a complete set of reports as described in the "Standard CPM Reports" section.

2. a complete set of copies of certified weekly-payroll data for the period.

3. a Change Order Status Report showing the following information for each approved modification and each pending or proposed change: Proposal Number, Modification Number (if applicable), affected activity numbers for each proposal, and the approved price for each modification.

54.8. Response to Application

54.8.1. Payment shall be made only for progress agreed upon by the COTR, performed on original Contract Work or approved modifications, in accordance with the current, approved Project Schedule. Failure to submit the Application in accordance with the specifications will prevent the processing of payments.

54.8.2. Payments will be mailed or direct deposited to the Contractor's address as identified in the contract documents on record with the Contracting Officer. Any changes of address or requests for wire transfer of progress payments must be made in writing, signed by the Contractor's authorized person, and submitted to the Contracting Officer.

55. ASSIGNMENT OF CLAIMS

55.1. Assignment of Claims are subject to the approval of the Contracting Officer. Any Assignment of Claim or subsequent re-assignment shall meet the requirements of the General Conditions contract clause entitled "FAR 52.232-23 Assignment of Claims".

55.2. All documents for assignments shall be written in the English language and shall be original ink signatures of the Contractor and assignee. All monies shall be identified in US dollars.

PROJECT CLOSEOUT REQUIREMENTS

56. PROJECT CLOSEOUT

56.1. Definition: Project closeout is a scheduled process for fulfillment of remaining contract requirements at the end of the project in preparation for final acceptance, final payment, normal termination of contract, beneficial occupancy, and establishment of the warranty period(s).

57. SUBSTANTIAL COMPLETION

57.1. Definition: The date of Substantial Completion of a project or specified part of a project is the date, as confirmed by inspection by the COTR, when the construction is at least 95% complete and ready for beneficial occupancy, so that the Smithsonian can take possession of that area or part of the work. Portions of the work that are specified to be phased for completion, areas required for Smithsonian's use prior to completion of the total project, or items of work identified by the COTR as necessary for partial beneficial occupancy may be inspected for substantial completion separately from the rest of the Work.

57.1.1. The Smithsonian Institution reserves the right to occupy or install equipment in completed areas of the building prior to substantial completion provided that such occupancy does not interfere with the completion of the work. Such partial occupancy shall not constitute acceptance of any part of the work.

57.2. Request for Substantial Completion Inspection: The Contractor shall submit a written request to the COTR for an inspection to establish Substantial Completion status. This request shall specify areas or parts of the work to be considered and shall include a listing of all exceptions to the request, that is, items not considered to be substantially complete.

57.3. Submission of Operation and Maintenance Manuals: Prior to requesting Substantial Completion Inspection, the Contractor shall submit to the COTR three (3) sets of manuals for all systems and equipment, as specified in the technical sections of this specification. The manuals shall be bound in letter-sized, three-ring, loose-leaf binders with durable plastic covers. They shall be organized into suitable volumes of manageable size using the divisions of the Specifications as a guide. Each manual shall have table of contents and shall be assembled to conform to the table of contents with tab sheets locating each subject. The instructions shall be legible and easy to read. Where oversize drawings are necessary, they shall be folded to be not greater than letter-size. The words "Operation and Maintenance Manual", the name and location of the project, project number, contract number, date, and the name of the general contractor, shall appear on the cover. Manuals shall include, as a minimum, the following data:

57.3.1. Detailed description of each system and each of its components, including layout showing piping, valves, controls and other components, and including diagrams and illustrations where applicable.

57.3.2. Wiring and control diagrams with data to explain detailed operation and control of each component.

57.3.3. Control sequence describing start-up, operation, and shutdown.

57.3.4. Procedures for starting, operating, and shutdown.

57.3.5. Installation instructions.

57.3.6. Maintenance and overhaul instructions.

57.3.7. Lubricating schedule, including type, grade, temperature range and frequency.

57.3.8. Emergency instructions and safety precautions.

57.3.9. On-site acceptance test results for equipment installed under this contract.

57.3.10. Approved product data, shop drawings, and system as-builts.

57.3.11. Copies of approved certifications and laboratory test reports (where applicable).

57.3.12. Notarized copies of warranties (originals to be provided as required by "Warranties and Guarantees").

57.3.13. Written instructions for test procedures.

57.3.14. Performance curves and rating data.

57.3.15. Parts list, including source of supply, recommended spare parts, and service organization convenient to Smithsonian.

57.3.16. Name, address, and telephone number of each subcontractor who installed equipment and systems, local representative for each type of equipment and each system.

57.3.17. Other pertinent data applicable to the operation and maintenance of systems or equipment and/or other data as specified Divisions 2 through 16 of the Specifications.

57.4. Other Prerequisites for Substantial Completion Inspection: The Contractor shall also complete the following prior to requesting inspection for certification of substantial completion:

57.4.1. Testing and start-up of systems.

57.4.2. Installation of all signage, including accessibility related signs, equipment instructions, identification labels, and permanent directional signs.

57.4.3. Submission of spare parts, tools, and surplus materials as required in technical specifications.

57.4.4. Scheduling of training sessions for Smithsonian personnel.

57.4.5. Removal of all waste, rubbish, and temporary facilities and services. Means of access to all areas of the work to be inspected by the COTR shall be maintained.

57.4.6. Disposition of samples and mock-ups not incorporated into the work.

57.4.7. Arrangement for permanent utility connections and billing responsibility transfer to Smithsonian's Office of Facilities Operations (OFO).

57.4.8. Arrangement for transfer of security responsibility for the project site and changeover of locks by Smithsonian's Office of Protection Services (OPS).

57.4.9. Hazardous Waste Disposal: Submit copies to the COTR of the following hazardous waste records for hazardous waste generated on SI property and disposed of by contract personnel.

1. Hazardous Waste Manifests
2. Notification and Certification Forms
3. Material Profile Sheet or characterization
4. Container Content Sheets
5. Certificates of Disposal

57.5. Scheduling of the Substantial Completion Inspection: Within seven (7) calendar days after receipt of the Contractor's written request, the COTR will either schedule an inspection or advise the Contractor of work that must be completed or prerequisites that must be met prior to scheduling the Substantial Completion Inspection. In that case another written request for Substantial Completion Inspection must be submitted when all requirements have been met.

57.6. The Substantial Completion Inspection: The Substantial Completion Inspection will be performed by representatives of the Smithsonian Institution led by the COTR. During the inspection the COTR will prepare a punch list of deficiencies in the work. If the punch list becomes too extensive the COTR may cancel the inspection and require additional work to be performed for a repeat inspection.

57.6.1. For satisfactory inspection results, the COTR will issue the written punch list to the Contractor as soon as possible after the inspection. Items on the punch list must be completed prior to final acceptance of the total project work.

57.6.2. For unsatisfactory inspection results, the COTR will within three (3) calendar days give written notice to the Contractor that the Work or portion of the Work is not substantially complete in accordance with the contract documents and therefore does not meet Substantial Completion status. Requests for re-inspection shall meet all requirements for the original request for Substantial Completion inspection.

57.7. Punch List: Incomplete contract requirements identified during the Substantial Completion Inspection will form an initial basis for a punch list for final acceptance. All punch list items must be completed by the Contractor within the Contract Time. If additional days are needed to complete the punch list items beyond the Contract Time, then the Contractor shall submit, prior to the end of the Contract Time, a written request to the Contracting Officer stating:

57.7.1. Items requiring additional time

57.7.2. Amount of time needed to complete each item

57.7.3. Reasons why the items cannot be completed by the contract completion date.

58. FINAL COMPLETION AND ACCEPTANCE

58.1. Definition: The date of final completion of a project is the date, as confirmed by inspection by the COTR, when the Work is satisfactorily completed and accepted in accordance with the contract documents, as amended and/or modified.

58.2. Request for Final Completion Inspection: When all items on the punch list have been corrected to the satisfaction of the COTR and additional requirements as described below have been satisfied, the Contractor shall submit a written request for Final Completion Inspection.

58.3. Prerequisites for Final Completion Prior to requesting the inspection for certification of Final Completion the Contractor shall complete the following:

58.3.1. Submission of a copy of prior punch-list stating that each item has been completed or otherwise resolved for acceptance.

58,3.2. Provision of Instructions to Smithsonian Personnel -where instructions to Smithsonian personnel are specified in other sections, furnish, without additional expense to the Smithsonian, the services of competent instructors, who will give full instruction in the care, adjustment, and operation of the systems and equipment to designated Smithsonian employees.

1. Each instructor shall be familiar with all parts of the system on which he or she is to give instruction and shall be knowledgeable about the systems' operation and required maintenance. Factory trained instructors shall be employed wherever practical and available.

2. Unless otherwise required or approved, the instruction shall be given during the regular work week after the equipment has been accepted and turned over to the Smithsonian for regular operation. Where significant changes or modifications in equipment are made under the terms of the contract, additional instruction shall be provided as may be necessary to acquaint the operating personnel of the changes or modifications. Unless otherwise stated, at least half of the time allocated for instruction shall be "hands-on," using the actual system installed.

3. Upon completion the Contractor shall obtain written acknowledgment from the COTR that the required instruction was completed.

58.3.3. Posting of operating instructions approved by the COTR for each system and each principal piece of equipment. Include wiring and control diagrams showing the complete layout of the entire system including equipment, piping, valves, and control sequence framed under clear laminated plastic, and posted where directed by the COTR. Printed or engraved operating instructions for each principal piece of equipment including start-up, proper adjustment, operating lubrication, shut-down safety precautions, procedure in the event of equipment failure, and any other necessary items of instruction as recommended by the manufacturer of the unit shall be attached to or posted adjacent to the piece of equipment. Operating instructions exposed to the weather or wet or humid conditions shall be made of weather-resisting materials or shall be suitably framed and enclosed to be weather protected. Operating instructions shall not fade when exposed to sunlight and shall be secured to prevent easy removal or peeling. The Contractor shall coordinate the location of posted instructions with the COTR.

58.3.4. Provision of equipment demonstrations for each equipment item. The Contractor shall coordinate scheduling of all demonstrations through the COTR.

58.3.5. Submission of original warranties for all products, equipment, and systems.

1. The Contractor shall assemble original warranty certificates or notarized copies of warranty certificates executed by the Contractor, subcontractors, suppliers, and manufacturers in a tab-indexed three-ring loose leaf binder with a durable plastic cover. The table of contents shall identify the item covered, the location of the item, the date of Substantial Completion, expiration date of the warranty, and the supplier, vendor, and installing contractor. Duplicate notarized copies of warranties shall be provided as required by "Manuals for Operation, Maintenance, and As-Built Product Data."

2. Each warranty certificate or bond shall identify the date(s) for:

(1) Substantial Completion status in accordance with project closeout requirements.

(2) Beginning and ending of the warranty period.

(3) The Contractor shall provide any coincidental product warranty that is available on a product incorporated in the Work, but for which the warranty is not specifically required by the contract documents.

3. Warranty of Construction: The Contractor shall warrant that the work performed under this contract conforms to the contract requirements and is free of any defect in equipment, materials, design furnished, or workmanship performed by the Contractor or any subcontractor or supplier at any tier. Unless otherwise stated in the technical sections of the Specifications, the warranty of the Work shall continue for a period of one (1) year from the date of Final Completion status. If Smithsonian takes partial occupancy before Final Completion, then the warranty for that portion shall be in effect for a period of one (1) year beginning on the date of Substantial Completion for that portion of the Work.

58.3.6. Submission of construction progress photographs and negatives, property survey, and similar final record information.

58.3.7. Arrangement for change-over locks through the COTR and Smithsonian Office of Protection Services as required for security for Smithsonian occupancy.

58.3.8. Submission of evidence of payment and transfer date of utility company accounts for those utilities previously billed to the Contractor during construction, as necessary.

58.3.9. Submission of evidence that all regulatory agency permits and code requirements have been completed and recorded, as necessary.

58.3.10. Submission of a signed, written statement that no damage has occurred to the site as documented by the pre-condition survey report.

58.3.11. Final clean-up, including:

1. Sweep and dust all surfaces and wash all finished surfaces to appear new and free of all stains, soil marks, dirt, and other forms of defacement.

2. Remove labels which are not required as permanent labels.

3. Clean transparent materials, including mirrors and window/door glass, to a polished condition, removing substances that are noticeable as vision-obscuring materials. Replace broken glass and damaged transparent materials.

4. Clean exposed exterior and interior hard-surfaced finishes to a dirt-free condition, free of dust stains, films, and similar noticeable substances. Except as otherwise indicated, avoid disturbance of natural weathering of exterior surfaces. Restore reflective surfaces to original reflective condition.

5. Wipe surfaces of equipment clean. Remove excess lubrication and other substances.

6. Remove debris and surface dust from limited-access spaces including roofs, plenums, shafts, trenches, equipment vaults, manholes, attics and similar spaces.

7. Wet-mop concrete and clean other hard-surface floors according to manufacturers' recommendations.

8. Vacuum clean carpeted surfaces and similar soft surfaces.

9. Clean plumbing fixtures to a sanitary condition, free of stains including those resulting from water exposure.

10. Clean project site (yard and grounds) of litter and foreign substances. Sweep exterior paved areas to a broom-clean condition; remove stains, petro-chemical spills and other foreign deposits. Rake grounds that are neither planted nor paved, to a smooth, even textured surface.

58.4. Inspection of the Work for Final Completion: Upon receipt of the Contractor's written notice that the work has been completed the COTR will inspect the work to confirm Final Completion status and acceptance of the work. As soon as possible after inspection, the COTR will either provide written acknowledgment of final acceptance or advise the Contractor of work not completed or obligations not fulfilled as required for final completion and acceptance.

58.5. Application for Final Payment:

62.5.1. Application for Final Payment shall be submitted only after Final Acceptance has been certified in writing to the Contractor by the COTR. Application shall include final labor data and progress schedule update.

62.5.2. Final Payment will be approved when Final Acceptance has been certified and the following conditions have been met:

1. Certification signed and submitted by the Contractor that all contract requirements, including contract modifications, have been met.

2. Final Release of Claims submitted.

3. Release of assignment of claims or consent of surety submitted, as necessary.

4. All security ID badges, and parking permits returned to Smithsonian.

5. As-Built Record Drawings submitted. During the progress of the work the Contractor shall maintain a complete and up-to-date set of record prints, open to inspection by the COTR at any time. These prints shall provide a

complete and accurate as-built record of all changes to the Contract Drawings, including rerouting of runs, relocation of items or control points, and all other modifications. The exact location of pipes, conduit, or other features concealed underground, under concrete, in chases, or above ceilings shall be shown by perpendicular dimensions from at least two available landmarks. As-built drawings shall be neatly marked with colored pencils or ink, marked "As-Built," and signed and dated by the Contractor. Upon completion of the Work and before final payment, the Contractor shall submit to the COTR photographically produced as-built record drawings on 4-mil, double matte, mylar sheets, sized the same as the contract drawings; electronic copies of as-built record drawings in PDF and DWG formats.

6. As-Built Record Survey of Underground Utilities submitted. If outside or underground utilities are part of the work, the Contractor shall furnish to the COTR for approval an acceptable and accurately dimensioned survey showing location and elevation of underground storage tanks, all utility lines for water, gas, electrical, sewer, steam, etc., including valves, connections and changes in direction, as installed under the contract, within the property lines and outside the building walls. Points where utility lines emerge from the building shall be located from lot monuments. The survey shall be made to scale in pencil or ink on 3-mil, double matte mylar sheets the same size as the contract drawings and must be marked "As-Built" and signed and dated by the Contractor. The Contractor shall furnish an electronic copy of as-built record drawings in PDF and DWG formats to the COTR as well as a copy on a 3-mil, double matte, and Mylar sheet or sheets the same size as the contract drawings

7. As-Built Record Specifications submitted. The Contractor shall submit one (1) hard copy and a digital (scanned) set of project specifications with annotations to identify any changes made during construction, referencing modification numbers, dates and originators of authorizing letters or memos, and other sources of changes. The cover shall be marked "As-Built" and signed and dated by the Contractor.

Construction and Demolition Waste Tracking Sheet:
To be submitted with each application for payment for the payment period, and at project completion with total waste data and total percentage of waste diverted from landfill for entire project period.

Project Name: _____
Start Date: _____
End Date: _____

Material Description	Disposal date	Diverted from Landfill or incinerator? (Y/N)	Diversion method (Recycled, Salvaged, etc.)	Hauler or Destination (submit receipts)	Volume (in cubic feet)	Weight (in tons)
Land Clearing Debris						
Gypsum Wallboard Scrap						
Cardboard						
Paper goods						
Beverage containers						
Assorted Plastic						
Wood Pallets						
Asphaltic Concrete Paving						
Concrete						
Brick						
CMU						
Lumber						
Plywood and OSB						
Wood Paneling						
Wood Trim						
Miscellaneous Metals						
Structural Steel						
Rough Hardware						
Insulation						
Roofing						
Doors and Frames						
Door Hardware						
Windows						
Non-Window Glass						
Glazing						

Material Description	**Disposal date**	**Diverted from Landfill or incinerator? (Y/N)**	**Diversion method (Recycled, Salvaged, etc.)**	**Hauler or Destination (submit receipts)**	**Volume (in cubic feet)**	**Weight (in tons)**
Acoustical Tile						
Carpet						
Carpet Pad						
Demountable Partitions						
Equipment						
Cabinets						
Plumbing Fixtures						
Piping						
Piping Supports and Hangers						
Valves						
Sprinklers						
Mechanical Equipment						
Electrical Conduit						
Copper Wiring						
Light Fixtures						
Lamps						
Lighting Ballasts						
Electrical Devices						
Switchgear and Panel boards						
Transformers						
Other:						
Other:						
Other:						
				Total Diverted		
				Total Not Diverted		
				Total All Waste = Total Diverted + Total Not Diverted		
				% Diversion Rate* = Total Diverted/Total All Waste		

**Percentage Diversion Rate to be compiled after project completion. Minimum Diversion rate is 50%. Goal Diversion rate is 75%*

END OF SUPPLEMENTARY CONDITIONS FOR CONSTRUCT

SECTION 024119 - SELECTIVE DEMOLITION

PART 1 - GENERAL

1.1 SUMMARY

A. Section Includes:

1. Demolition and removal of selected portions of building or structure.
2. Demolition and removal of systems.

1.2 DEFINITIONS

A. Remove: Detach items from existing construction and legally dispose of them off-site unless indicated to be removed and salvaged or removed and reinstalled.

B. Remove and Salvage: Carefully detach from existing construction, in a manner to prevent damage, and deliver to Owner ready for reuse.

C. Remove and Reinstall: Detach items from existing construction, prepare for reuse, and reinstall where indicated.

D. Existing to Remain: Existing items of construction that are not to be permanently removed and that are not otherwise indicated to be removed, removed and salvaged, or removed and reinstalled.

1.3 PREINSTALLATION MEETINGS

A. Predemolition Conference: Conduct conference at Project site.

1.4 INFORMATIONAL SUBMITTALS

A. Qualification Data: For refrigerant recovery technician.

B. Predemolition Photographs or Video: Submit before Work begins.

C. Statement of Refrigerant Recovery: Signed by refrigerant recovery technician.

1.5 CLOSEOUT SUBMITTALS

A. Landfill Records: Indicate receipt and acceptance of hazardous wastes by a landfill facility licensed to accept hazardous wastes.

1.6 QUALITY ASSURANCE

A. Refrigerant Recovery Technician Qualifications: Certified by an EPA-approved certification program.

1.7 FIELD CONDITIONS

A. Owner will occupy portions of building immediately adjacent to selective demolition area. Conduct selective demolition so Owner's operations will not be disrupted.

B. Conditions existing at time of inspection for bidding purpose will be maintained by Owner as far as practical.

C. Notify COTR of discrepancies between existing conditions and Drawings before proceeding with selective demolition.

D. Hazardous Materials: It is not expected that hazardous materials will be encountered in the Work.

1. Hazardous materials will be removed by Owner before start of the Work.
2. If suspected hazardous materials are encountered, do not disturb; immediately notify COTR and Owner. Hazardous materials will be removed by Owner under a separate contract.

E. Utility Service: Maintain existing utilities indicated to remain in service and protect them against damage during selective demolition operations.

1. Maintain fire-protection facilities in service during selective demolition operations.

1.8 WARRANTY

A. Existing Warranties: Remove, replace, patch, and repair materials and surfaces cut or damaged during selective demolition, by methods and with materials so as not to void existing warranties.

1.9 COORDINATION

A. Arrange selective demolition schedule so as not to interfere with Owner’s operations.

PART 2 - PRODUCTS

2.1 PEFORMANCE REQUIREMENTS

A. Regulatory Requirements: Comply with governing EPA notification regulations before beginning selective demolition. Comply with hauling and disposal regulations of authorities having jurisdiction.

B. Standards: Comply with ANSI/ASSE A10.6 and NFPA 241.

PART 3 - EXECUTION

3.1 EXAMINATION

A. Verify that utilities have been disconnected and capped before starting selective demolition operations.

B. Survey existing conditions and correlate with requirements indicated to determine extent of selective demolition required.

C. When unanticipated mechanical, electrical, or structural elements that conflict with intended function or design are encountered, investigate and measure the nature and extent of conflict. Promptly submit a written report to COTR.

D. Survey of Existing Conditions: Record existing conditions by use of measured drawings, preconstruction photographs/preconstruction videotapes.

1. Comply with requirements specified in Section 013233 "Photographic Documentation."

3.2 UTILITY SERVICES AND MECHANICAL/ELECTRICAL SYSTEMS

A. Existing Services/Systems to Remain: Maintain services/systems indicated to remain and protect them against damage. u

1. Comply with requirements for existing services/systems interruptions specified in Section 011000 "Summary."

B. Existing Services/Systems to Be Removed, Relocated, or Abandoned: Locate, identify, disconnect, and seal or cap off indicated utility services and mechanical/electrical systems serving areas to be selectively demolished.

1. COTR will arrange to shut off indicated services/systems when requested by Contractor.
2. Arrange to shut off indicated utilities with utility companies.
3. If services/systems are required to be removed, relocated, or abandoned, provide temporary services/systems that bypass area of selective demolition and that maintain continuity of services/systems to other parts of building.
4. Disconnect, demolish, and remove fire-suppression systems, plumbing, and HVAC systems, equipment, and components indicated to be removed.

   a. Piping to Be Removed: Remove portion of piping indicated to be removed and cap or plug remaining piping with same or compatible piping material.
   b. Piping to Be Abandoned in Place: Drain piping and cap or plug piping with same or compatible piping material.
   c. Equipment to Be Removed: Disconnect and cap services and remove equipment.

d. Equipment to Be Removed and Reinstalled: Disconnect and cap services and remove, clean, and store equipment; when appropriate, reinstall, reconnect, and make equipment operational.
e. Equipment to Be Removed and Salvaged: Disconnect and cap services and remove equipment and deliver to Owner.
f. Ducts to Be Removed: Remove portion of ducts indicated to be removed and plug remaining ducts with same or compatible ductwork material.
g. Ducts to Be Abandoned in Place: Cap or plug ducts with same or compatible ductwork material.

C. Refrigerant: Remove refrigerant from mechanical equipment to be selectively demolished according to 40 CFR 82 and regulations of authorities having jurisdiction.

3.3 PREPARATION

A. Site Access and Temporary Controls: Conduct selective demolition and debris-removal operations to ensure minimum interference with roads, streets, walks, walkways, and other adjacent occupied and used facilities.

1. Comply with requirements for access and protection specified in Section 015000 "Temporary Facilities and Controls."

B. Temporary Facilities: Provide temporary barricades and other protection required to prevent injury to people and damage to adjacent buildings and facilities to remain.

C. Temporary Shoring: Provide and maintain shoring, bracing, and structural supports as required to preserve stability and prevent movement, settlement, or collapse of construction and finishes to remain, and to prevent unexpected or uncontrolled movement or collapse of construction being demolished.

3.4 SELECTIVE DEMOLITION, GENERAL

A. General: Demolish and remove existing construction only to the extent required by new construction and as indicated. Use methods required to complete the Work within limitations of governing regulations and as follows:

1. Neatly cut openings and holes plumb, square, and true to dimensions required. Use cutting methods least likely to damage construction to remain or adjoining construction. Use hand tools or small power tools designed for sawing or grinding, not hammering and chopping, to minimize disturbance of adjacent surfaces. Temporarily cover openings to remain.
2. Cut or drill from the exposed or finished side into concealed surfaces to avoid marring existing finished surfaces.
3. Do not use cutting torches until work area is cleared of flammable materials. At concealed spaces, such as duct and pipe interiors, verify condition and contents of hidden space before starting flame-cutting operations. Maintain fire watch and portable fire-suppression devices during flame-cutting operations.

4. Locate selective demolition equipment and remove debris and materials so as not to impose excessive loads on supporting walls, floors, or framing.
5. Dispose of demolished items and materials promptly.

B. Removed and Salvaged Items:

1. Clean salvaged items.
2. Pack or crate items after cleaning. Identify contents of containers.
3. Store items in a secure area until delivery to Owner.
4. Transport items to Owner's storage area as designated by Owner.
5. Protect items from damage during transport and storage.

C. Removed and Reinstalled Items:

1. Clean and repair items to functional condition adequate for intended reuse.
2. Pack or crate items after cleaning and repairing. Identify contents of containers.
3. Protect items from damage during transport and storage.
4. Reinstall items in locations indicated. Comply with installation requirements for new materials and equipment. Provide connections, supports, and miscellaneous materials necessary to make item functional for use indicated.

D. Existing Items to Remain: Protect construction indicated to remain against damage and soiling during selective demolition. When permitted by COTR, items may be removed to a suitable, protected storage location during selective demolition and cleaned and reinstalled in their original locations after selective demolition operations are complete.

3.5 DISPOSAL OF DEMOLISHED MATERIALS

A. General: Except for items or materials indicated to be recycled, reused, salvaged, reinstalled, or otherwise indicated to remain Owner's property, remove demolished materials from Project site and legally dispose of them in an EPA-approved landfill.

1. Do not allow demolished materials to accumulate on-site.
2. Remove and transport debris in a manner that will prevent spillage on adjacent surfaces and areas.
3. Remove debris from elevated portions of building by chute, hoist, or other device that will convey debris to grade level in a controlled descent.
4. Comply with requirements specified in Section 017419 "Construction Waste Management and Disposal."

B. Burning: Do not burn demolished materials.

C. Disposal: Transport demolished materials off Owner's property and legally dispose of them.

3.6 CLEANING

A. Clean adjacent structures and improvements of dust, dirt, and debris caused by selective demolition operations. Return adjacent areas to condition existing before selective demolition operations began.

END OF SECTION 024119

SECTION 033053 - MISCELLANEOUS CAST-IN-PLACE CONCRETE

PART 1 - GENERAL

1.1 SUMMARY

A. Section includes cast-in-place concrete, including reinforcement, concrete materials, mixture design, placement procedures, and finishes.

1.2 ACTION SUBMITTALS

A. Product Data: For each type of product indicated.

B. Shop drawings: For concrete curb, include plans, elevations, sections, full-size details, and attachments to other work. Show embedded items.

C. Other Action Submittal:

1. Design Mixtures: For each concrete mixture.

1.3 QUALITY ASSURANCE

A. Ready-Mix-Concrete Manufacturer Qualifications: A firm experienced in manufacturing ready-mixed concrete products and that complies with ASTM C 94/C 94M requirements for production facilities and equipment.

B. Comply with ACI 301 (ACI 301M).

C. Comply with ACI 117, "Specifications for Tolerances for Concrete Construction and Materials."

PART 2 - PRODUCTS

2.1 FORMWORK

A. Furnish formwork and formwork accessories according to ACI 301 (ACI 301M).

2.2 STEEL REINFORCEMENT

A. Reinforcing Bars: ASTM A 615/A 615M, Grade 60 (Grade 420), deformed.

B. Plain-Steel Wire: ASTM A 82/A 82M, as drawn.

C. Plain-Steel Welded Wire Reinforcement: ASTM A 185/A 185M, fabricated from as-drawn steel wire into flat sheets.

D. Deformed-Steel Welded Wire Reinforcement: ASTM A 497/A 497M, flat sheet.

2.3 CONCRETE MATERIALS

A. Cementitious Material: Use the following cementitious materials, of the same type, brand, and source throughout Project:

1. Portland Cement: ASTM C 150, Type III High Early Strength. Supplement with the following:

   a. Fly Ash: ASTM C 618, Class C or F.
   b. Ground Granulated Blast-Furnace Slag: ASTM C 989, Grade 100 or 120.

B. Normal-Weight Aggregate: ASTM C 33, graded, ¾" nominal maximum aggregate size.

C. Water: ASTM C 94/C 94M.

2.4 ADMIXTURES

A. Air-Entraining Admixture: ASTM C 260.

B. Chemical Admixtures: Provide admixtures certified by manufacturer to be compatible with other admixtures and that will not contribute water-soluble chloride ions exceeding those permitted in hardened concrete. Do not use calcium chloride or admixtures containing calcium chloride.

1. Water-Reducing Admixture: ASTM C 494/C 494M, Type A.
2. Accelerating Admixture: ASTM C 494/C 494M, Type C.
3. Water-Reducing and Accelerating Admixture: ASTM C 494/C 494M, Type E.
4. High-Range, Water-Reducing Admixture: ASTM C 494/C 494M, Type F.

2.5 CURING MATERIALS

A. Absorptive Cover: AASHTO M 182, Class 3, burlap cloth or cotton mats.

B. Moisture-Retaining Cover: ASTM C 171, polyethylene film or white burlap-polyethylene sheet.

C. Water: Potable.

2.6 CONCRETE MIXTURES

A. Normal-Weight Concrete: Prepare design mixes, proportioned according to ACI 301 (ACI 301M), as follows:

1. Minimum Compressive Strength: 4000 psi (27.6 MPa) at 7 days (High Early Strength).
2. Maximum Water-Cementitious Materials Ratio: 0.45.
3. Cementitious Materials: Use fly ash, pozzolan, ground granulated blast-furnace slag, and silica fume as needed to reduce the total amount of portland cement, which would otherwise be used, by not less than 40 percent.
4. Slump Limit: 4 inches (100 mm), plus or minus 1 inch (25 mm).
5. Air Content: Maintain within range permitted by ACI 301 (ACI 301M). Do not allow air content of trowel-finished floor slabs to exceed 3 percent.

2.7 CONCRETE MIXING

A. Ready-Mixed Concrete: Measure, batch, mix, and deliver concrete according to ASTM C 94/C 94M, and furnish batch ticket information.

1. When air temperature is above 90 deg F (32 deg C), reduce mixing and delivery time to 60 minutes.

PART 3 - EXECUTION

3.1 FORMWORK

A. Design, construct, erect, brace, and maintain formwork according to ACI 301 (ACI 301M).

3.2 EMBEDDED ITEMS

A. Place and secure anchorage devices and other embedded items required for adjoining work attached to or supported by cast-in-place concrete. Use setting drawings, templates, diagrams, instructions, and directions furnished with items to be embedded.

3.3 STEEL REINFORCEMENT

A. Comply with CRSI's "Manual of Standard Practice" for fabricating, placing, and supporting reinforcement.

1. Do not cut or puncture vapor retarder. Repair damage and reseal vapor retarder before placing concrete.

3.4 JOINTS

A. General: Construct joints true to line with faces perpendicular to surface plane of concrete.

3.5 CONCRETE PLACEMENT

A. Comply with ACI 301 (ACI 301M) for placing concrete.

B. Before test sampling and placing concrete, water may be added at Project site, subject to limitations of ACI 301 (ACI 301M).

C. Do not add water to concrete during delivery, at Project site, or during placement.

D. Consolidate concrete with mechanical vibrating equipment.

3.6 FINISHING FORMED SURFACES

A. Smooth-Formed Finish: As-cast concrete texture imparted by form-facing material, arranged in an orderly and symmetrical manner with a minimum of seams. Repair and patch tie holes and defective areas. Remove fins and other projections exceeding 1/8 inch (3 mm).

1. Apply to concrete surfaces exposed to public view, or to be covered with a coating or covering material applied directly to concrete.

B. Related Unformed Surfaces: At tops of walls, horizontal offsets, and similar unformed surfaces adjacent to formed surfaces, strike off smooth and finish with a texture matching adjacent formed surfaces. Continue final surface treatment of formed surfaces uniformly across adjacent unformed surfaces, unless otherwise indicated.

3.7 CONCRETE PROTECTING AND CURING

A. General: Protect freshly placed concrete from premature drying and excessive cold or hot temperatures. Comply with ACI 306.1 for cold-weather protection and with ACI 301 (ACI 301M) for hot-weather protection during curing.

B. Begin curing after finishing concrete but not before free water has disappeared from concrete surface.

C. Curing Methods: Cure formed and unformed concrete for at least seven days by one or a combination of the following methods:

1. Moisture Curing: Keep surfaces continuously moist for not less than seven days with the following materials:

   a. Water.
   b. Continuous water-fog spray.
   c. Absorptive cover, water saturated and kept continuously wet. Cover concrete surfaces and edges with 12-inch (300-mm) lap over adjacent absorptive covers.

2. Moisture-Retaining-Cover Curing: Cover concrete surfaces with moisture-retaining cover for curing concrete, placed in widest practicable width, with sides and ends lapped at least 12 inches (300 mm), and sealed by waterproof tape or adhesive. Cure for not less than seven days. Immediately repair any holes or tears during curing period using cover material and waterproof tape.

3.8 FIELD QUALITY CONTROL

A. Testing and Inspecting: Contractor will engage a qualified testing and inspecting agency to perform field tests and inspections and prepare test reports.

B. Testing and Inspecting: Engage a qualified testing and inspecting agency to perform tests and inspections and to submit reports.

C. Inspections:

1. Steel reinforcement placement.
2. Verification of use of required design mixture.
3. Concrete placement, including conveying and depositing.
4. Curing procedures and maintenance of curing temperature.

D. Concrete Tests: Testing of composite samples of fresh concrete obtained according to ASTM C 172 shall be performed according to the following requirements:

1. Testing Frequency: One composite sample shall be obtained for each day's pour of each concrete mix exceeding 5 cu. yd. (4 cu. m) but less than 25 cu. yd. (19 cu. m), plus one set for each additional 50 cu. yd. (38 cu. m) or fraction thereof.

2. Slump: ASTM C 143/C 143M; one test at point of placement for each composite sample, but not less than one test for each day's pour of each concrete mixture. Perform additional tests when concrete consistency appears to change.
3. Concrete Temperature: ASTM C 1064/C 1064M; one test hourly when air temperature is 40 deg F (4.4 deg C) and below and when 80 deg F (27 deg C) and above, and one test for each composite sample.
4. Compression Test Specimens: ASTM C 31/C 31M.

   a. Cast and laboratory cure one sets of six standard cylinder specimens for each composite sample.

5. Compressive-Strength Tests: ASTM C 39/C 39M; test laboratory-cured specimens as follows: 2 at 7 days, 2 at 28 days, and 2 reserve cylinders to test as directed by COTR.

   a. A compressive-strength test shall be the average compressive strength from a set of two specimens obtained from same composite sample and tested at age indicated.

6. Strength of each concrete mixture will be satisfactory if every average of any three consecutive compressive-strength tests equals or exceeds specified compressive strength and no compressive-strength test value falls below specified compressive strength by more than 500 psi (3.4 MPa).
7. Test results shall be reported in writing to Architect, concrete manufacturer, and Contractor within 48 hours of testing. Reports of compressive-strength tests shall contain Project identification name and number, date of concrete placement, name of concrete testing and inspecting agency, location of concrete batch in Work, design compressive strength at 28 days, concrete mixture proportions and materials, compressive breaking strength, and type of break for both 7- and 28-day tests.

8. Nondestructive Testing: Impact hammer, sonoscope, or other nondestructive device may be permitted by Architect but will not be used as sole basis for approval or rejection of concrete.
9. Additional Tests: Testing and inspecting agency shall make additional tests of concrete when test results indicate that slump, air entrainment, compressive strengths, or other requirements have not been met, as directed by Architect. Testing and inspecting agency may conduct tests to determine adequacy of concrete by cored cylinders complying with ASTM C 42/C 42M or by other methods as directed by Architect.
10. Additional testing and inspecting, at Contractor's expense, will be performed to determine compliance of replaced or additional work with specified requirements.
11. Correct deficiencies in the Work that test reports and inspections indicate do not comply with the Contract Documents.

3.9 REPAIRS

A. Remove and replace concrete that does not comply with requirements in this Section.

END OF SECTION 033053

SECTION 03 3713 SHOTCRETE REPAIR

PART 1 GENERAL

1.1 SECTION INCLUDES

A. Furnish labor and materials to repair rockform in Exhibit 2 and 3 where it will be cut for installation of louvers in the exterior walls.

B. Furnish labor, materials including supports, backforms, reinforcement, concrete materials, mixture design, pigments, stains, paints, tools, and equipment necessary to repair shotcrete rock formations by pneumatically-projected concrete.

E. Flowable Fill - Lightweight Controlled Low Strength Material (CSLM) to fill voids below and behind shotcrete structures or as infill behind cages.

1.2 DEFINITIONS

A. Wet Mix Process shall consist of premixed fine aggregate, cement, and water pneumatically applied by suitable mechanism.

B. Dry Mix process shall consist of a mixture of fine aggregate and cement, pneumatically placed by a suitable mechanism and to which water is added immediately prior to discharge from the applicator.

1.3 REFERENCE STANDARDS

A. ACI 523.1R - Guide for Cast-in-Place Low-Density Concrete.

B. ACI 229R- 13 - Report on Controlled Low-Strength Materials.

C. ACI 506.2 - Specification for Materials, Proportioning, and Application of Shotcrete; 2013.

1.4 ADMINISTRATIVE REQUIREMENTS

A. Coordination: Coordinate the installation of all work in this Section with size, location and installation of service utilities. Cooperate with artist performing sculpturing work.

B. Preinstallation Meeting: Convene one week before starting work of this section; require attendance by all affected trades.

1.5 SYSTEM DESCRIPTION

A. The fabrication of artificial rockwork installation, and/or adjustment of finish details and exhibit accessories shall be accomplished in such a manner as to match existing as possible.

1.6 SUBMITTALS

A. General:
   1. In accordance with the Submittal requirements defined in Division 1 of this specification, submit the following for the COTR's review:
      a. materials
      c. Proposed equipment for use on the project.
      d. Qualifications of shotcrete firm, and all personnel as specified in this section.

B. Test Reports and Certificates:
   1. Proposed mix design and test results that document the capability of the mix design to meet the specified requirements of this section.
   2. Mill certificates:
      a. Furnish certified copies of cement, silica-fume, and pozzolan mill test reports showing compliance with drawings and specifications.
      b. Aggregate test reports:
         1) Furnish tests documenting that aggregate used in the work meets requirements specified herein.
      c. Admixture test report & certificate:
         1) Submit copies of tests showing conformance with requirements of ASTM C 494.
         2) Provide certificate from supplier of mix design that all admixtures and additives are compatible.
   3. Proposed mix design including density and compressive strength characteristics for Flowable Fill (CDF or CSLM).

C. Shop Drawings:
   1. Thirty days prior to starting work submit:
      a. Shop drawings including but not limited to plans, sections and details of all shotcrete elements that require structural engineering design including reinforcing bars sizes and layout ; footing layout and sizes; and sufficient details to describe all aspects of the Work.

D. Structural Design Documentation:

1. Submit with the completed shop drawings:
   a. Structural drawings and calculations bearing the signed stamp of a professional structural Engineer, licensed in Washington DC, for all shotcrete structures and foundations. Include all loads and (where the shotcrete is supported by other structures) reactions from the shotcrete.
2. Structural engineering shall be reviewed by the COTR, Engineer of Record and the Building Official (for structural elements) prior to commencement of the work. Allow time in schedule for reviews, comments and resubmittals.

E. Product data:
1. Furnish manufacturer's specifications and installation instructions for water stops, sealants, grouts, epoxies, synthetic fiber additive, curing materials and compounds, anchor bolts, inserts and other embedded items.
2. Manufacturer's standard and custom concrete color chart for integral color selection.
   a. Indicate selected color(s) to be used in preparation of sample panels.
   b. Acceptance of color selection is based on the COTR's review of finished sample panels.
3. Submit system of waterproofing pools, complete with products, assemblies and techniques proposed for review by COTR.

F. Samples:
1. Prior to beginning work the Shotcrete Contractor shall submit one sample panel as described below for each specific shotcrete finish specified in this section for the COTR's review.
   a. Sample panels shall represent the finished surfaces, texturing and coloring. Panels will also represent low, medium and high levels of detail. Panels will be used as the basis for review and acceptance of the work.
   b. Sample panels may not be fabricated in place and may not remain as part of the Work.
   c. Panels shall not be removed until the completion of all work.
   d. Rejected sample panels shall be re-submitted for review at no additional cost to the Owner.

G Progress Photography:
1. Submit a weekly photographic progress record to the COTR and Owner’s representative.

1.7 QUALITY ASSURANCE

A. Art Direction:

1. The COTR explicitly reserves the right to monitor the work for aesthetic quality and to assume control of the work through direction of the Shotcrete contractor's project superintendent until specified effects are achieved.

B. Structural Engineering (including final design of the armatures, if required, within the shotcrete) of all work of this section is the responsibility of the Contractor.

E. Schedule of Minimum Reviews by the COTR:

1. Review of shop drawings prior to execution of any site work. This includes any revisions to shop drawings.
2. Review of sample panels of all finishes including a minimum of one set of revisions.
3. Review of armatures for form shape and height prior to application of any shotcrete.
4. Review first application of Texture Coat for conformance with accepted sample panels.
5. Review of surface-applied color stains.

F. Qualifications of the Shotcrete Contractor and Personnel:

1. Established firm with a minimum of five (5) years experience in successfully constructing artificial earth and rock formations for natural habitat exhibits of similar nature to this project.
2. Foreman:
   a. Project Foreman with a minimum of 3000-hours experience in the management of similar project crews and experience in coordination with other trades in the completion of simulated artificial exhibitry fabrication projects.
3. Nozzleman:
   a. Certified as required by ACI CP-60 (2009) with a minimum of 3000-hours and able to demonstrate by test his abilities to apply shotcrete as required by the specifications.
4. Artists:
   a. Provide artists skilled in the simulation of natural formations of rock and earth to supervise and perform the application of all aesthetic work
   b. Assure that personnel assigned to required sample panels is assigned to the same work in place throughout the duration of the project.

c. Arrange for artists who will perform the work to be present at all pre-bid and pre-construction meetings pertaining to shotcrete and that they are on the distribution list for addenda.

5. Project Personnel:

a. Provide full documentation of all construction crew members listing specific personnel to be used and detailing the experience of each person listed and their ability to perform all phases of the work.

6. The following is a non-restrictive list of Shotcrete Exhibitry Contractors, subject to compliance with the requirements of these specifications:

a. Cemrock Landscapes, Inc. (attn: Bryan Olson)
4790 South Julian Avenue
Tuscon, AZ 85714
Phone: (520) 571-1999, Fax: (520) 571-1888, Toll Free: (800) 843-6067

b. Turnstone Construction Shop (attn: John Fulford)
1229 N. 97th Street
Seattle, WA 98103
Phone: (206) 634-1521, Fax: (206) 634-1570

c. David L. Manwarren Corp.
9146 9th St.
Rancho Cucamonga, CA 91730
(909) 989-5883, Fax: (909) 989-5493

d. Cost of Wisconsin (attn: Rick Haas)
4201 Highway P
Jackson, WI 53037
Phone: (800) 221-7625

e. The Nassal Company
415 W. Kaley Street,
Orlando, FL 32806
Phone: (405) 648-0400

f. Dixon Studios, Inc. (Contact: Kay Nichols)
912 South Park Ave
Tucson, AZ 85719
Phone: (520)-628-3699

1.8 QUALITY ASSURANCE

A. Perform Work in accordance with ACI 506.2.

1.9 TESTING

A. General: See Divison 1 Quality Requirements for Test Reports requirements and Testing Agency responsibilities and duties.

B. Responsibility for Testing

1. Routine testing services will be performed by a Testing Laboratory designated by the Owner. These testing services will be performed at the expense of the Owner.

C. Testing Services

1. The designated Testing Laboratory will:

a. Review proposed mix proportions and mix test results.

b. Test strength of the Shotcrete as work progresses.

1) Make 3 test cylinders when structural layer shotcrete is being installed, from any shotcrete batch, one time per day only. These samples are only for the structural shotcrete layers, not for the finish coat shotcrete

2) Secure production samples of materials at plants or stockpiles during construction and test for compliance with specifications. If the materials fail to meet approved requirements, aggregate will be rejected and the expense of testing shall be borne by Contractor.

c. Inspect reinforcement for spacing limits, support and clearances per ACI 318 chapter

1.10 SURVEYING

A. General:

1. The Contractor will examine the existing conditions of where the repair is to take place.

1.11 PRODUCT HANDLING

A. Cement

1. Store cement in weather tight enclosures to protect against dampness and contamination.
2. Discard cement which shows signs of deterioration unless testing demonstrates that it conforms with the requirements stated herein.

B. Aggregates

1. Prevent segregation and contamination of aggregates by proper arrangement and use of stockpiles.

C. Admixtures

1. Store admixtures properly to prevent contamination, evaporation, freezing, or other damage.

1.12 FIELD CONDITIONS

A. Maintain material and surrounding air temperature at minimum 50 degrees F prior to and during installation and maintain material at this minimum temperature for 7 days after completion of work. Provide equipment and cover to maintain minimum temperature.

PART 2 PRODUCTS

2.1 STEEL REINFORCING MATERIALS

A. General:

1. Comply with all requirements of Concrete Reinforcing, as described in Division 03, except where requirements of this Section are more specific or more stringent.

B. Reinforcing Steel: ASTM A 615 Grade 60 (420) unless noted otherwise on Drawings.

1. Type: Deformed billet-steel bars.
2. Finish: Unfinished , unless otherwise indicated.
3. Only epoxy-coated or FRP bars shall be used for connection of shotcrete reinforcing assemblies into cast in place concrete pool shell walls and slabs.
4. Provide concrete cover over all reinforcement per 3.07D below.

C. Steel Welded Wire Reinforcement: .

1. Un-finished ASTM A 185, plain type at areas not in contact with salt water
2. Form: flat or coil sheets .
3. Mesh Size and Wire Gage: As indicated on Drawings, min. 6x6/ 1.4x1.4

D. Reinforcement Accessories:

1. Tie Wire: Annealed or Electro-Galvanized , minimum 16 gage.
2. Chairs, Bolsters, Bar Supports, Spacers: Sized and shaped for adequate support of reinforcement during concrete placement.
3. Provide plastic components for placement within 3 inches of weathering surfaces.

2.2 SYNTHETIC FIBER-REINFORCING MATERIALS

A. Fibers:

1. 100 percent virgin polypropylene, multifilament fibers containing no reprocessed olefin materials and specifically manufactured for use as concrete secondary reinforcement.

2. Comply with ASTM C-1116-10a. Type III.
3. Fiber manufacturer must document evidence of 5 year satisfactory performance history.

2.3 CONCRETE MATERIALS

A. Portland Cement:
1. Comply with ASTM C 150 or ASTM C595-93.
2. Use only one brand of cement throughout the project.
3. Regional Materials: Regionally extracted and fabricated aggregates.

2.4 AGGREGATES

A. Fine and course aggregates conforming to ASTM C33 and as herein specified.

B. Coarse aggregate gradations shall meet the requirements of ASTM C 33, Size 67.

C. Fine aggregate shall meet the fine aggregate gradation requirements of ASTM C 33.

2.5 WATER

A. Fresh, clean, and potable mixing water free from oil, acid, organic matter or other deleterious substances.

2.6 ADMIXTURES

A. Air Entraining Admixture:
1. Conforming to ASTM C 260.
2. Air entraining agent will result in an entrained air content of 4% +/- 1%.

B. Silica-fume (micro silica):
1. Dry, densified dry, or slurry. Mix in accordance with ASTM C94.

C. Superplasticizers:
1. Meet requirements of ASTM C 494, Type F or G.
2. Superplasticizers:
   a. A synthesized sulfonated complex polymer type superplasticizer containing no chlorides or other corrosive chemicals, or alkalines.
   b. Add to concrete mix at manufacturer's recommended dosage to allow placement with concrete temperatures up to 90 degrees F.
   c. Provide performance on project by trial mixes or reduce temperature to below 80 degrees F by other means.
   d. Manufacturer and product:
      1) BASF, MasterRheobuild 1000. www.basf-admixtures.com; 800.228.3318

2) W. R. Grace & Co., Cambridge, MA, Daracem 100. www.na.graceconstruction.com; 877.423.6491
3) Euclid Chemical Co., Cleveland, OH, Eucon Plastol 6400 or EUCON 537; www.euclidchemical.com ; 800.321.7628

D. Water Reducing Admixture:
1. ASTM C494, Type A or D, may be used at Contractor's option, subject to approval of mix design.

E. Calcium Chloride:
1. Conforming to ASTM D 98, in predissolved flake or pellet form. Use only upon written authorization of the COTR and only in shotcrete that is protected from weather and is not used to retain or hold water.

F. Waterproofing Additive: Integral waterproofing intended for mixing into concrete to close concrete pores and inhibit reinforcement corrosion with no decrease in concrete strength or chemical resistance.
1. Potable Water Contact Approval: NSF certification for use on structures holding potable water, based on testing in accordance with NSF 61.
2. Manufacturers:
a. Xypex C-Series; Xypex Chemical Corporation : www.xypex.com; 800.961.4477
b. Aquafin-IC ADMIX; Aquafin Inc. ; www.aquafin.net; 410.392.2324
c. Substitutions: See Section 01 6000 - Product Requirements.

G. Fly ash and pozzolanic admixtures:
1. Conforming to ASTM C 618 for Class C pozzolan. The following limitations to ASTM C 618 shall apply:
a. Loss on ignition maximum 3.0%
b. Fineness (percent retained #325 mesh) maximum 20%.
c. Calcium oxide content maximum 10%.
d. Sulfur Trioxide content maximum 0.75%.

H. Corrosion Inhibitor
1. Calcium nitrite 30% plus or minus 2% by weight in aqueous solution.
2. Conform to ASTM C494, Type C.
3. Manufacturer and product:
a. W.R. Grace and Co., DCI or DCI-S; www.na.graceconstruction.com; 877.423.6491

b. BASF, MasterLife CI 30; 800.228.3318

2.7 CONCRETE MIX DESIGN

A. General:

1. Prepare the concrete mix design in accordance with ASTM C1116-91

B. Design Mix:

1. Prepare the design mix for each type and strength of shotcrete by either laboratory trial batch or field experience methods as specified in ACI 301 and ACI 211.1.
2. Submit recommended mix proportions in accordance Part One of this section.
3. Select proportions on the basis of compressive strength tests of specimens continuously moist cured until testing at 28 days as required by ASTM C1116-91.

C. Design Strength and Admixtures:

1. Shotcrete Within Water Pools (to 600mm (24-inches) above waterline):
   a. Compressive strength at 28 days 5000psi (34 Mpa). 400 kg/m3 (675 lb/cyd) total cement content with maximum water/cement ratio of 0.40.
   b. Maximum slump = 50mm (2-inches).
   c. Maximum aggregate size = 12mm (1/2-inch).
   d. Silica-fume: 40 kg per m3 (68 lb/cyd).
   e. Xypex C-Series waterproofing: 3.5 kg/m3 (6 lbs/cyd.)
   f. Synthetic fiber-reinforcement: 0.9 kg/m3 (1.5 lb/cyd) (walls only).
   g. Water reducers and retarders to suit mix design.
   h. Superplasticiser as required.
   i. Corrosion inhibitor: 12-litres per m3 (3-gals per cubic yard).
2. Non-water contact Shotcrete:
   a. Compressive strength at 28 days 4000psi (30 Mpa). 400 kg/m3 (675 lb/cyd) total cement content with maximum water/cement ratio of 0.40.
   b. Maximum slump = 50mm (2-inches).
   c. Maximum aggregate size = 12mm (1/2-inch).
   d. Silica-fume: 40 kg per m3 (68 lb/cyd).
   e. Water reducers and retarders to suit mix design.
   f. Superplasticiser as required.

D. Field trial mix:

1. After completion of mix design work and prior to concreting operations, establish, based upon the design mixes, field proportions for concrete to be used in the Work. Manufacture the field trial concrete utilizing the equipment which will be used on the job.
2. The field trial concrete batch shall be 2-m3 (2-cubic yards) minimum per test. Adjust design mixes as required to provide a dense, homogeneous, durable concrete with good workability and finishing qualities.
3. Obtain six standard test cylinders from each field trial mix and test as in mix design.
4. Notify COTR in advance of any field trial mix work and no field trial mix shall be made without representatives of the COTR and the accepted testing laboratory being present.

2.8 FLOWABLE FILL - LIGHTWEIGHT CONTROLLED LOW STRENGTH MATERIAL (CSLM)

A. General:
   1. Provide Flowable Fill in locations indicated on the Drawings (whether called out as as CDF or CSLM or Flowable Fill) and where necessary to fill void space below or within shotcrete forms and slabs.
   2. Upon completion of the Work, there shall be no void spaces within any rock formations under water. Fill all such voids with Flowable Fill (CDF or CSLM).

2.9 CURING MATERIALS

A. Moisture-Retaining Cover: ASTM C 171; regular curing paper, white curing paper, clear polyethylene, white polyethylene, or white burlap-polyethylene sheet.

B. Moisture- Absorptive Cover: AASHTO M 182, Class 2, burlap cloth made from jute or kenaf, washed to prevent concrete staining, weighing approximately 9 oz./sq. yd. when dry.

C. Liquid Curing Compound: ASTM C 309, Type 1, clear or translucent. 350 g/l Low VOC or water based.
   1. Acceptable Products:
      a. W.R. Meadows, 3100. www.wrmeadows.com; 800.342.5976
      b. Symons (Dayton Superior), Resi-Chem Clear; 847.298.3200
      c. Substitutions: See Section 01 6000 - Product Requirements.

2.10 INTEGRAL CONCRETE COLORANTS

A. General:
   1. Conform to ASTM C979.

2. Compatibility with Concrete Mix:
    a. Assure compatibility of selected pigments with proposed concrete mix design and admixtures.
    b. All exposed shotcrete will be integrally colored in addition to the surface applied coloring.

B. Color Selection:
1. Provide color admixtures to match existing rockform.

C. Manufacturer's Recommendations:
1. Conform to all manufacturers' recommendations for mixing, finishing, and curing colored concrete.

D. Approved Manufacturers:
1. Davis Colors; www.daviscolors.com; 800.356.4848
2. Scofield 'Chromix' Color Admixtures; www.scofield.com; 800.800.9900.
3. Substitutions: See Section 01 6000 - Product Requirements.

2.11 STAINS

A. General:
1. Non-fading, non-toxic, penetrating concrete stains.
2. Range of finished colors capable of achieving the effects to match existing rockform.
3. Colors guaranteed for a minimum of ten years with no more than 25% fade.
4. Verify that proposed stains are appropriate for the conditions which will affect the exhibit: local microclimate, chlorinated water, or other bleaching or corrosive environments.

2.12 OTHER ACCESSORIES

A. Sheet material between shotcrete and glazing:
1. Sheet neoprene.
    a. ASTM D-2000 type BC MIIL-R-3065 SC
    b. Color: Black
    c. Thickness: ¼”
    d. 60 durometer shore A+/-5
    e. Tensile strength 1300 Lbs., 200% elongation
2. Sheet closed cell polyethylene
    a. ASTM D 1622
    b. W.R. Meadows DECK-O-FOAM or equal

c. Thickness: ¼”

B. Compressible Filler:

1. Rubber, cork or expanded polyethylene.
2. Highly flexible.
3. Full width of expansion or control joint

C. Waterstops between shotcrete and cast-in-place concrete :

1. Greenstreak Lockstop, Synko-Flex waterstop SF302 by Henry or equal mastic waterstop.
2. Apply primer and install waterstops per manufacturer's instructions.
3. See drawing details.

PART 3 EXECUTION

3.1 EXAMINATION

A. Verify existing conditions before starting work.

B. Verify correct placement of reinforcement with sufficient clearances to permit complete encasement.

3.2 GENERAL

A. Structural Substrate:

1. The first shotcrete application shall be a structural substrate, capable of maintaining the intended shape, and supporting live and dead loads as specified or as required by codes.

B. Finish Coat:

1. The second shotcrete application shall produce the intended color and texture.
2. Provide sufficient thickness in the texture coat to assure its structural integrity and bonding to the structural substrate and to create the specified finishes.
3. Provide fine textured surfaces for all shotcrete surfaces in view of visitors and within 10 feet of visitor accessible areas.

3.3 PREPARATION OF SURFACES FOR SHOTCRETE

B. Shotcrete over Existing Concrete or shotcrete :

1. Remove all unsound material before applying Shotcrete. Chip or scarify any area to be repaired to remove offsets which would cause an abrupt change in thickness without suitable reinforcement.

2. Taper edges to leave no square shoulders at the perimeter of a cavity. Remove all loose material from areas receiving Shotcrete.
3. Wet the surface until it is damp, but without visible free water.
4. Verify that any shown or required waterproofing of existing concrete slabs or walls is complete and fully cured prior to placement of shotcrete.

C. Steel:

1. Remove rust, oil, scale, and previously applied paint from steel surfaces receiving Shotcrete. Comply with Specification SSPC-SP6 of the Steel Structures Painting Council.

3.4 FORMING SHOTCRETE STRUCTURES

A. Formwork Costs:

1. Include all forming costs in the contract price.
2. No extra will be paid for shotcrete forming which is required by the elevation and layout plans as drawn.

B. Formwork:

1. Provide forms of any rigid material such as wood, steel, earth, paperbacked reinforcing mesh, or expanded metal lath.
2. Adequately brace and secure formwork to prevent vibration or deflection during the application of shotcrete.
3. Design formwork to provide for the escape of compressed air and rebound during shotcreting.

C. Form coatings:

1. Use form-coating material on removable forms to prevent absorption of moisture and to prevent bond with the shotcrete.
2. Use a non staining material for surfaces exposed to view when construction is completed.
3. The form-coating material shall not interfere with subsequent bonding to the Shotcrete when this is required.

3.5 REINFORCING

A. General:

1. Install reinforcing which complies with all requirements of ACI 506R-90 and these drawings and specifications.
2. Clean reinforcement of loose rust, mill scale, earth, ice, and other materials, which reduce or destroy bond with concrete.

3. Accurately position, support and secure reinforcement against displacement by construction or concrete placement operations. Locate and support reinforcing by metal chairs, runners, bolsters, spacers and hangers, as required.
4. Notify COTR upon completion of reinforcing and prior to placing shotcrete.

B. Fibrous Concrete Reinforcement:

1. Add fibrous concrete reinforcement to concrete materials at the time concrete is batched in amounts in specified amounts in accordance with approved submittals for each type of concrete required.
2. Mix concrete in strict accordance with fiber reinforcement manufacturer's instructions and recommendations for uniform and complete distribution.

3.6 BATCHING AND MIXING CONCRETE

A. Mix Proportions:

1. Control by weight batching, or by volume batching meeting the requirements of ASTM C 685.

C. Ready Mixed Concrete:

1. Ready-mixed concrete shall comply with ASTM C94, except that it may be delivered to the Shotcrete equipment in the dry state if that equipment is capable of adding the water and mixing it satisfactorily with the dry ingredients, or with ASTM C685, in which case the ingredients are delivered dry and proportioned and mixed at the site.

3.7 PLACING SHOTCRETE

A. General:

1. Place shotcrete using suitable delivery equipment and procedures that will result in shotcrete in place meeting the requirements of this specification.

B. Placement Techniques:

1. Control thickness, method of support, air pressure, and/or water content of shotcrete to preclude sagging or sloughing off.
2. Discontinue shotcreting or provide suitable means to screen the nozzle stream if wind or air currents cause separation of the nozzle stream during placement.
3. Broom or scarify the surface of freshly placed shotcrete to which, after hardening, additional layers of Shotcrete are to be bonded. Dampen surface just prior to application of succeeding layers.

4. First, fill with sound material all corners and any area where rebound cannot escape or be blown free. Complete the corners between the web and the flanges of structural steel before application to the flat areas.
5. Provide a supply of clean, dry air adequate for maintaining sufficient nozzle velocity for all parts of the work and, if required, for simultaneous operation of a suitable blow pipe for clearing away rebound.

C. Placement Around Reinforcement:

1. Hold the nozzle at such distance and angle to place material behind reinforcement before any material is allowed to accumulate on its face. In the dry-mix process additional water may be added to the mix when encasing reinforcement to facilitate a smooth flow of material behind the bars.
2. Do not place shotcrete through more than one layer of reinforcing steel rods or mesh in one application unless demonstrated by preconstruction tests that steel is properly encased. Test to ascertain if any voids or sand pockets have developed around or behind reinforcement by probing with an awl or other pointed tool after the shotcrete has achieved its initial set; by removal of randomly selected bars; or by coring or other suitable means.

D. Cover of Reinforcement:

1. Provide the following minimum cover over reinforcement:
   a. For linings or coatings: 18mm (3/4-inch) for fine aggregate and 36mm (1-1/2-inch) for coarse aggregate.
   b. For principal reinforcement in beams, girders, and columns: 50-mm (2-inch).
   c. For reinforcement in submerged conditions (exhibit pools): 75mm (3-inch). Note this is a critical minimum and non-compliance requires removal and replacement of the areas not in compliance and corrections and repairs of all other affected elements. If removal is required all work is at contractor's cost and at no cost to Owner or design team.
   d. For reinforcement in slabs and walls: 18mm (3/4-inch) for fine aggregate and 36mm (1-1/2-inch) for coarse aggregate.
   e. Minus tolerance on cover shall be 10mm (3/8-inch) except that it shall not be greater than one-third of the specified cover.

E. Line and Thickness Control:

1. Use adequate ground wires or other accepted means to establish the thickness, surface planes, and finish lines of the shotcrete. Maintain specified tolerances by keeping ground wires secure and taut.

F. Placement Precautions:

1. Do not place shotcrete if drying or stiffening of the mix takes place at any time prior to delivery to the nozzle.
2. Do not use rebound or previously expended material in the shotcrete mix.
3. Remove all overspray or rebound prior to final set and before placement of shotcrete material on such adjacent surfaces.

3.8 JOINTS

A. Construction Joints:

1. Install construction joints in accordance with the contract documents and reviewed shop drawings.
2. Taper construction joints to a shallow edge form, about 25mm (1-inch) thick, except where the joint will be subjected to compressive stress. In this case, use non tapered joints and take special care to avoid or remove trapped rebound at the joint.
3. Thoroughly clean and wet entire joint prior to the application of additional shotcrete.
4. Make joints perpendicular to the main reinforcement. Continue reinforcement across joints.

B. Aesthetic Placement of Joints:

1. Position construction and expansion joints to conform to the locations of cracks and joints in the simulated rock and earth forms as shown in drawings.
2. Joint sealant for expansion/contraction joints must be pick-proof at animal areas.

3.9 PREPARATION OF SURFACES FOR TEXTURE COAT

A. Repair of Surface Defects:

1. Remove and replace shotcrete which lacks uniformity, exhibits segregation, honeycombing, or lamination, or which contains any dry patches, slugs, voids, or sand pockets.
2. Repair defective areas by a method acceptable to the COTR.
3. Repair core holes in accordance with Chapter 9 of ACI 301. Do not fill core holes with shotcrete.
4. Replace any shotcrete which subsides after placement.

3.11 FINISHES

A. Structural Substrate:

1. Provide natural gun finish on all shotcrete which does not receive texture coat.
2. Provide Broom Finish on all base layers which are to receive texture coat.
3. Do not scrape or cut to remove high spots until the shotcrete has become stiff enough to withstand pull of the cutting device.

B. Texture Coat :

1. The Shotcrete Contractor will provide an artist(s) to perform all texturing, shaping and coloring of the shotcrete.
2. Finished product of the texture coat or finish shall match existing adjacent.
3. Provide texture coat with integral colorant to provide a base color for finish stains. Color as approved by the COTR.

3.12 CURING AND PROTECTION

A. Initial Curing:

1. Immediately after finishing keep shotcrete continuously moist for at least 24 hours. Use one of the following materials or methods:
   a. Ponding or continuous sprinkling.
   b. Absorptive mat or burlap fabric, sand, or other covering kept continuously wet.
   c. Continuous steam (not exceeding 65 C (150 F)) or vapor mist bath.
   d. Curing compounds and application:
      1) Comply with ASTM C 309.
      2) On natural gun or flash finishes, use twice the normal application rate recommended by the manufacturer.
   e. Do not use curing compounds on the following surfaces:
      1) Texture coat.
      2) Structural substrate which is to receive texture coat.
      3) Any surface against which additional shotcrete, color stains, or cementitious finishing materials are to be bonded.
   f. Employ positive measures, such as sandblasting, to remove over-sprayed curing compounds completely prior to the application of such additional materials.

B. Final Curing:

1. General:

a. Provide additional curing immediately following the initial curing and before the shotcrete has dried. Continue the method used in initial curing.
b. Formed Surfaces:
   1) If forms are removed during curing period, immediately use one of the curing materials or methods listed for initial curing. Continue such curing for the remainder of the curing period.
c. Duration of Curing:
   1) Continue curing for the first seven (7) days after shotcreting, or for first 3 days if high-early-strength cement is used, or until specified strength is obtained. During the curing period, maintain shotcrete above 5C (40F) and in a moist condition as specified for initial curing.
   2) Prevent rapid drying at the end of the curing period.

3.14 CLEANING

A. See Division 1 - Construction Waste Management and Disposal for additional requirements.

3.15 PROTECTION

A. Protect installed shotcrete from subsequent construction operations.

END OF SECTION

SECTION 055000 - METAL FABRICATIONS

PART 1 - GENERAL

1.1 SUMMARY

A. Section Includes:

1. Miscellaneous steel framing and supports.

2. Metal training wall assemblies

B. Products furnished, but not installed, under this Section include the following:

1. Loose steel lintels.

1.2 ACTION SUBMITTALS

A. Product Data: For all products.

B. Shop Drawings: Show fabrication and installation details. Include plans, elevations, sections, and details of metal fabrications and their connections. Show anchorage and accessory items.

PART 2 - PRODUCTS

2.1 PERFORMANCE REQUIREMENTS

A. Thermal Movements: Allow for thermal movements from ambient and surface temperature changes acting on exterior metal fabrications by preventing buckling, opening of joints, overstressing of components, failure of connections, and other detrimental effects.

1. Temperature Change: 100 deg F, ambient.

2.2 METALS

A. Metal Surfaces, General: Provide materials with smooth, flat surfaces unless otherwise indicated. For metal fabrications exposed to view in the completed Work, provide materials without seam marks, roller marks, rolled trade names, or blemishes.

B. Recycled Content of Steel Products: Postconsumer recycled content plus one-half of preconsumer recycled content not less than 25 percent.

C. Steel Plates, Shapes, and Bars: ASTM A 36/A 36M.

D. Steel Tubing: ASTM A 500/A 500M, cold-formed steel tubing.

E. Stainless-Steel Bars and Shapes: ASTM A 276, Type 304L. Fy = 35 ksi minimum.

F. Slotted Channel Framing: Cold-formed metal box channels (struts) complying with MFMA-4.

1. Size of Channels: 1-5/8 by 1-5/8 inches.
2. Material: Galvanized steel, ASTM A 653/A 653M, structural steel, Grade 33, with G90 coating; 0.079-inch nominal thickness.

2.3 FASTENERS

A. General: Unless otherwise indicated, provide Type 304 stainless-steel fasteners at storefront framing and zinc-plated fasteners with coating complying with ASTM B 633 or ASTM F 1941, Class Fe/Zn 5, at exterior walls. Select fasteners for type, grade, and class required.

1. Provide stainless-steel fasteners for fastening aluminum.
2. Provide stainless-steel fasteners for fastening stainless steel.

B. Post-Installed Anchors: Torque-controlled expansion anchors or chemical anchors.

1. Material for Interior Locations: Carbon-steel components zinc plated to comply with ASTM B 633 or ASTM F 1941, Class Fe/Zn 5, unless otherwise indicated.

C. Slotted-Channel Inserts: Cold-formed, hot-dip galvanized-steel box channels (struts) complying with MFMA-4, 1-5/8 by 7/8 inches by length indicated with anchor straps or studs not less than 3 inches long at not more than 8 inches o.c. Provide with temporary filler and tee-head bolts, complete with washers and nuts, all zinc-plated to comply with ASTM B 633, Class Fe/Zn 5, as needed for fastening to inserts.

2.4 MISCELLANEOUS MATERIALS

A. Low-Emitting Materials: Paints and coatings shall comply with the testing and product requirements of the California Department of Public Health's (formerly, the California Department of Health Services') "Standard Method for the Testing and Evaluation of Volatile Organic Chemical Emissions from Indoor Sources Using Environmental Chambers."

B. Shop Primers: Provide primers that comply with Section 099000 "Painting."

C. Universal Shop Primer: Fast-curing, lead- and chromate-free, universal modified-alkyd primer complying with MPI#79 and compatible with topcoat.

1. Use primer containing pigments that make it easily distinguishable from zinc-rich primer.

D. Galvanizing Repair Paint: High-zinc-dust-content paint complying with SSPC-Paint 20 and compatible with paints specified to be used over it.

E. Nonshrink, Nonmetallic Grout: Factory-packaged, nonstaining, noncorrosive, nongaseous grout complying with ASTM C 1107/C 1107M. Provide grout specifically recommended by manufacturer for interior and exterior applications.

F. Concrete: Comply with requirements in Section 033053 "Miscellaneous Cast-in-Place Concrete" for normal-weight, concrete with a minimum 7-day compressive strength of 4000 psi.

2.5 FABRICATION, GENERAL

A. Shop Assembly: Preassemble items in the shop to greatest extent possible. Use connections that maintain structural value of joined pieces.

B. Cut, drill, and punch metals cleanly and accurately. Remove burrs and ease edges. Remove sharp or rough areas on exposed surfaces.

C. Weld corners and seams continuously to comply with the following:

1. Use materials and methods that minimize distortion and develop strength and corrosion resistance of base metals.
2. Obtain fusion without undercut or overlap.
3. Remove welding flux immediately.
4. At exposed connections, finish exposed welds and surfaces smooth and blended.

D. Form exposed connections with hairline joints, flush and smooth, using concealed fasteners or welds where possible. Locate joints where least conspicuous.

E. Fabricate seams and other connections that are exposed to weather in a manner to exclude water. Provide weep holes where water may accumulate.

2.6 MISCELLANEOUS FRAMING AND SUPPORTS

A. General: Provide steel framing and supports not specified in other Sections as needed to complete the Work.

B. Fabricate units from steel shapes, plates, and bars of welded construction unless otherwise indicated. Fabricate to sizes, shapes, and profiles indicated and as necessary to receive adjacent construction.

2.7 MISCELLANEOUS STEEL TRIM

A. Unless otherwise indicated, fabricate units from steel shapes, plates, and bars of profiles shown with continuously welded joints and smooth exposed edges. Miter corners and use concealed field splices where possible.

B. Provide cutouts, fittings, and anchorages as needed to coordinate assembly and installation with other work.

C. Galvanize exterior miscellaneous steel trim.

D. Prime miscellaneous steel trim with zinc-rich primer.

2.8 FINISHES, GENERAL

A. Finish metal fabrications after assembly.

2.9 STEEL AND IRON FINISHES

A. Galvanizing: Hot-dip galvanize items as indicated to comply with ASTM A 153/A 153M for steel and iron hardware and with ASTM A 123/A 123M for other steel and iron products.

B. Shop prime iron and steel items unless they are to be embedded in concrete, sprayed-on fireproofing, or masonry, or unless otherwise indicated.

1. Shop prime with primers specified in Section 099000 "Painting".
2. Do not prime stainless steel.

C. Preparation for Shop Priming: Prepare surfaces to comply with requirements indicated below:

1. Exterior Items: SSPC-SP 6/NACE No. 3, "Commercial Blast Cleaning."
2. Items Indicated to Receive Zinc-Rich Primer: SSPC-SP 6/NACE No. 3, "Commercial Blast Cleaning."
3. Items Indicated to Receive Primers Specified in Section 099600 "High-Performance Coatings": SSPC-SP 6/NACE No. 3, "Commercial Blast Cleaning."
4. Other Steel Items: SSPC-SP 3, "Power Tool Cleaning."
5. Galvanized-Steel Items: SSPC-SP 16, "Brush-off Blast Cleaning of Coated and Uncoated Galvanized Steel, Stainless Steels, and Non-Ferrous Metals."

PART 3 - EXECUTION

3.1 INSTALLATION, GENERAL

A. Cutting, Fitting, and Placement: Perform cutting, drilling, and fitting required for installing metal fabrications. Set metal fabrications accurately in location, alignment, and elevation; with edges and surfaces level, plumb, true, and free of rack; and measured from established lines and levels.

B. Fit exposed connections accurately together to form hairline joints. Weld connections that are not to be left as exposed joints but cannot be shop welded because of shipping size limitations. Do not weld, cut, or abrade surfaces of exterior units that have been hot-dipped galvanized after fabrication and are for bolted or screwed field connections.

C. Field Welding: Comply with the following requirements:

1. Use materials and methods that minimize distortion and develop strength and corrosion resistance of base metals.
2. Obtain fusion without undercut or overlap.

3. Remove welding flux immediately.
4. At exposed connections, finish exposed welds and surfaces smooth and blended so no roughness shows after finishing and contour of welded surface matches that of adjacent surface.

D. Fastening to In-Place Construction: Provide anchorage devices and fasteners where metal fabrications are required to be fastened to in-place construction.

E. Provide temporary bracing or anchors in formwork for items that are to be built into concrete, masonry, or similar construction.

3.2 ADJUSTING AND CLEANING

A. Touchup Painting: Immediately after erection, clean field welds, bolted connections, and abraded areas. Paint uncoated and abraded areas with the same material as used for shop painting to comply with SSPC-PA 1 for touching up shop-painted surfaces.

B. Galvanized Surfaces: Clean field welds, bolted connections, and abraded areas and repair galvanizing to comply with ASTM A 780/A 780M.

END OF SECTION 055000

SECTION 055050 - ANIMAL ENCLOSURES

PART 1 - GENERAL

1.1 RELATED DOCUMENTS

A. Drawings and general provisions of the Contract, including General and Special Conditions and Division 1 Specification Sections, apply to this Section.

1.2 SUMMARY

A. Description of Work: Work of this Section includes, but is not limited to, the following:

1. Custom stainless steel wire mesh partitions for animal enclosures.
2. Custom animal doors:

    a. Stainless steel wire mesh animal doors.

B. Products Furnished but Not Installed:

1. Provide templates for anchor and bolt installation specified in other Sections.
2. Furnish inserts and anchoring devices which are set in concrete or built into masonry for installation of metal fabrications.

1.3 RELATED WORK SPECIFIED ELSEWHERE

A. See Section 055000 METAL FABRICATIONS.

1.4 SUBMITIALS

A. Product Data: Submit manufacturer's specifications and installation instructions for products used in animal enclosures and doors.

B. Shop Drawings:

1. Submit Shop Drawings for fabrication and erection of animal enclosures and doors.
2. Include plans, elevations and details of sections and connections.
3. Show anchorage and accessory items.
4. Include hardware schedule for animal doors.

C. Samples:

1. Submit 600 mm (24 inch) square samples of each type of stainless steel wire mesh, in required configurations and finish.

D. Design Modifications: Submit for review proposed variations in details or substitutions in materials required to meet specified performance requirement or to coordinate Work

E. Operation and Maintenance Data:
   1. Include parts list and other information needed for continued use of system.
   2. Include copy of submittal in Project operation and maintenance manual.

1.5 SYSTEM REQUJREMENTS

A. Design Requirements:

   1. Use materials of sizes, thicknesses, and configurations indicated.
   2. Design modifications:

      a. May be proposed by manufacturer to satisfy performance requirements.
      b. Must conform to design and specified durability and strength.
      c. Must maintain profiles and alignments indicated.

B. Structural Requirements- Enclosures and Doors for Pandas: Engineer, fabricate, and install enclosures and doors for panda areas to withstand 454 kg (1000 pound) impact at any point.

C. Environmental Requirements: Doors shall operate satisfactorily under the following conditions.

   1. Temperatures: In accordance with normal temperature range for District of Columbia metropolitan area.
   2. Rainfall: Annual average and maximum expected hourly rate in accordance with normal rainfall for District of Columbia metropolitan area.

D. Visual Requirements: Use materials which are smooth and free of surface blemishes including pitting, seam marks, roller marks, rolled trade names, and roughness.

E. Interface With Other Systems:

   1. Coordinate and furnish anchorages, setting drawings, diagrams, templates, instructions and directions for installation of anchors, including concrete inserts, sleeves, anchor bolts and miscellaneous items having integral anchors, which will be embedded in concrete or masonry construction.
   2. Coordinate delivery of such items to Project site.

1.6 QUALITY ASSURANCE

A. Fabricator and Installer Qualifications:

   1. Experienced in design, engineering, fabrication, and installation of custom animal enclosures and shift doors for zoos and exotic animals.
   2. Not less than 5 years documented, successful experience with work comparable to Work.

B. Welding Standards:

1. Comply with applicable provisions of AWS D1.6 "Structural Welding Code-Stainless Steel."
2. Welder qualifications: AWS certified for type of welding required.

C. Product Options: Information on Drawings and in Specifications establishes requirements for system configurations and performance characteristics.

1. System configurations are indicated by dimensions, arrangements, alignment, and profiles of components and assemblies as they relate to one another, and to adjoining construction.
2. Performance characteristics are indicated by criteria subject to verification by one or more methods including previously-demonstrated in-service performance on similar projects.

1.7 FABRICATED SAMPLES

A. Schedule:

1. Submit fabricated samples in a timely manner so that full production of the Work will comply with scheduled completion.
2. Failure to submit fabricated samples in a timely manner will not be grounds for extension of Contract Time under this Contract; nor will arbitrary substitutions be considered solely to expedite completion.

B. Prior to going into full production of Work, and after acceptance of samples, provide fabricated samples of the following:

1. Typical stainless steel wire mesh panel with stainless steel framing.

C. Size:

1. Wire mesh panel with framing: Not less than 1200 mm (4 feet) square.

D. Materials:

1. Complete fabricated samples with materials and fabrication methods to be used in final Work.
2. Show finish and workmanship expected of materials to be incorporated in Work

E. COTR's Review: COTR will review fabricated samples for visual acceptance of materials and workmanship.

F. Approved fabricated samples will be returned to Contractor. Properly maintained fabricated samples may be incorporated into completed Work.

1.8 PROJECT CONDITIONS

A. Field verify dimensions of supporting structure and other adjoining elements before fabrication where possible.

PART 2 - PRODUCTS

2.1 ACCEPTABLE PRODUCTS AND MANUFACTURERS

A. Acceptable Products and Manufacturers:

1. Other components:

a. Basis of design manufacturer: Design is based on custom systems and products by LGL Animal Care Products, to establish standard of quality.
b. Equivalent systems and products by the following manufacturers may be acceptable provided they comply with requirements of Contract Documents.
c. Smithsonian National Zoological Park approved equal.

2.2 MATERIALS

A. Stainless Steel: Provide Type 304, complying with referenced ASTM standards.

1. Plate, sheet and strip: ASTM A666.
2. Bars and shapes: ASTM A276.
3. Tubing: ASTM A269

B. Stainless Steel Wire Mesh: Provide woven wire stainless steel mesh, of the following diameters, configurations, and weave and crimp styles.

1. Mesh for use in giant panda areas:
a. 6 mm diameter wire, 51 mm x 51 mm centers (1/4 inch diameter wire, 2 inch x 2 inch centers)
b. Plain weave, lock crimp.

C. Grout: Non-shrink grout; factory-packaged, non-staining, non-corrosive, non-gaseous grout complying with ASTM Cl107; specifically recommended by manufacturer for both interior and exterior applications.

2.3 ACCESSORIES

A. Fasteners and Anchors:

1. General:

a. Provide Type 304 stainless-steel fasteners.
b. Select fasteners for type, grade, and class required for components being fastened and conditions of installation.

2. Stainless-steel bolts and nuts: Regular hexagon-head annealed stainless-steel bolts, nuts and, where indicated, flat washers; ASTM F593 for bolts and ASTM F594 for nuts, Alloy Group 1.
3. Anchor bolts: Stainless steel.

4. Lag bolts: ASME B18.2.1; Stainless steel.
5. Machine screws: ASME B18.6.3; Stainless steel.

6. Expansion anchors:

   a. Anchor bolt assembly with capability to sustain, without failure, load equal to six times load imposed when installed in unit masonry and four times load imposed when installed in concrete, as determined by testing according to ASTM E488, conducted by a qualified independent testing agency.
   b. Material: Alloy Group 1 stainless-steel bolts complying with ASTM F593, and nuts complying with ASTM F594.

B. Welding Rods and Bare Electrodes: Select according to AWS specifications for each metal alloy welded.

2.4 SHOP FINISHING

A. Stainless Steel:

1. General: Passivate and rinse surfaces. Remove embedded foreign matter and leave surfaces chemically clean.
2. Stainless steel:

   a. Sheet: NAAMM No. 2B, bright mill finish.
   b. Other items: As-fabricated mill finish.

2.5 FABRICATION- GENERAL

A. Fabricate items to dimensions, details, and configurations indicated on Drawings.

B. Assembly:

1. Pre-assemble items in shop to greatest extent possible.
2. Disassemble units as necessary for shipping and handling limitations.
3. Clearly mark units for re-assembly and coordinated installation.

C. Test each door assembly at factory for proper operation before shipment.

D. Fabricate Work to dimensions indicated or accepted on Shop Drawings.

E. Forming:

1. Form exposed Work true to line and level with accurate angles and surfaces and straight sharp edges.
2. Ease exposed edges to radius indicated, approximately 0.75 mm (1/32 inch) unless otherwise
3. Form bent-metal comers to smallest radius possible without causing grain separation or otherwise impairing Work.

4. Form exposed connections with hairline joints, flush and smooth, using concealed fasteners wherever possible.

F. Welding:

1. Weld comers and seams continuously, complying with AWS recommendations.
2. At exposed connections, grind exposed welds smooth and flush to match and blend with adjoining surfaces.

G. Anchors and Fasteners:

1. Provide for required anchorage, coordinated with supporting structure.
2. Fabricate and space anchoring devices to provide adequate support for intended use.
3. Cut, reinforce, drill and tap metal fabrications as indicated to receive hardware and similar items.
4. Use exposed fasteners of type indicated or, if not indicated, Phillips flathead (counter-sunk) screws or bolts.

2.6 WIRE MESH PARTITIONS AND ANIMAL ENCLOSURES

A. Stainless Steel Wire Mesh Partitions and Animal Enclosures:

1. Fabricate from structural stainless steel shapes, plates and bars, of welded construction using mitered joints for field connection, unless otherwise indicated.
2. Cut, drill and tap units to receive hardware and similar items.
3. Stainless steel wire mesh:

   a. Provide mesh of diameter, configuration, and weave and crimp style as required for each location, as specified above.
   b. Provide continuous weld where wire mesh attaches to framing members.

PART 3 - EXECUTION

3.1 EXAMINATION

A. Examine substrates and adjoining construction, and conditions under which Work is to be installed. Do not proceed with Work until unsatisfactory conditions are corrected.

3.2 INSTALLATION

A. Install components and systems in accordance with manufacturer's instructions and final Shop Drawings.

B. Cutting, Fitting and Placement:

1. Cut, drill and fit fabrications as required.

2. Set Work accurately in location, alignment and elevation, plumb, level, true and free of rack, measured from established lines and levels.
3. Fit exposed connections accurately together to form tight hairline joints.

C. Fastening:

1. Secure fabrications to in-place construction by using threaded stainless steel fasteners and anchors.
2. Anchor securely as required for intended use and to comply with performance requirements.
3. Do not use powder driven anchors.

D. Welding:

1. Comply with AWS Code for procedures of manual shielded metal-arc welding, appearance and quality of welds made, and methods used in correcting welds.
2. Grind exposed joints smooth.

E. Adjust framing prior to anchoring to ensure matching alignment at abutting joints.

1. Anchor brackets and flanges to concrete and masonry with bolts and expansion shields.
2. Provide openings in mesh as required for passage of piping and similar items and equipment.

F. Upon completion, test operation of doors to demonstrate satisfactory operation acceptable to COTR.

G. Immediately after installation, clean field welds, bolted connections and abraded areas.

H. Clean surfaces and lubricate joints and bearings in accordance with manufacturer's instructions.

I. Protect equipment from deterioration or damage until final completion.

END OF SECTION 055050

SECTION 055300 - METAL MESH

PART 1 - GENERAL

1.1 RELATED DOCUMENTS

A. Drawings and general provisions of the Contract, including General and Special Conditions and Division 1 Specification Sections, apply to this Section.

1.2 SUMMARY

A. Description of Work: Work of this Section includes, but is not limited to, the following:
   1. Custom stainless steel wire mesh partitions.

B. Products Furnished but Not Installed:
   1. Provide templates for anchor and bolt installation specified in other Sections.
   2. Furnish inserts and anchoring devices which are set in concrete or built into masonry for installation of metal fabrications.

1.3 RELATED WORK SPECIFIED ELSEWHERE

A. See Section 05500 METAL FABRICATIONS.

1.4 SUBMITTALS

A. Shop Drawings:
   1. Submit Shop Drawings for fabrication and erection of animal enclosure/partition.
   2. Include plans, elevations and details of sections and connections.
   3. Show anchorage and accessory items.

B. Samples:
   1. Submit 24 inch square samples of each type of stainless steel wire mesh, in required configurations and finish.

C. Design Modifications: Submit for review proposed variations in details or substitutions in materials required to meet specified performance requirement or to coordinate Work.

1.5 SYSTEM REQUIREMENTS

A. Design Requirements:
   1. Use materials of sizes, thicknesses, and configurations indicated.
   2. Design modifications:
      a. Must conform to design and specified durability and strength.
      b. Must maintain profiles and alignments indicated.

B. Structural Requirements - Enclosures for Pandas: Engineer, fabricate, and install enclosures for panda areas to withstand 454 kg (1000 pound) impact at any point.

C. Visual Requirements: Use materials which are smooth and free of surface blemishes including pitting, seam marks, roller marks, rolled trade names and roughness.

D. Interface With Other Systems:
   1. Coordinate and furnish anchorages, setting drawings, diagrams, templates, instructions and directions for installation of anchors, including concrete inserts, sleeves, anchor bolts and miscellaneous items having integral anchors, which will be embedded in concrete or masonry construction.
   2. Coordinate delivery of such items to Project site.

1.6 QUALITY ASSURANCE

A. Welding Standards:
   1. Comply with applicable provisions of AWS D1.6 "Structural Welding CodeBStainless Steel."
   2. Welder qualifications: AWS certified for type of welding required.

B. Product Options: Information on Drawings and in Specifications establishes requirements for system configurations and performance characteristics.
   1. System configurations are indicated by dimensions, arrangements, alignment, and profiles of components and assemblies as they relate to one another, and to adjoining construction.

1.7 FABRICATED SAMPLES

A. Schedule:
   1. Submit fabricated samples in a timely manner so that full production of the Work will comply with scheduled completion.
   2. Failure to submit fabricated samples in a timely manner will not be grounds for extension of Contract Time under this Contract; nor will arbitrary substitutions be considered solely to expedite completion.

B. Prior to going into full production of Work, and after acceptance of samples, provide fabricated samples of the following:
   1. Typical stainless steel wire mesh panel with stainless steel framing.

C. Size:
   1. Wire mesh panel with framing: Not less than 1200 mm (4 feet) square.

D. Materials:
   1. Complete fabricated samples with materials and fabrication methods to be used in final Work.
   2. Show finish and workmanship expected of materials to be incorporated in Work.

E. COTR's Review: COTR will review fabricated samples for visual acceptance of materials and workmanship.

F. Approved fabricated samples will be returned to Contractor. Properly maintained fabricated samples may be incorporated into completed Work.

1.8 PROJECT CONDITIONS

A. Field verify dimensions of supporting structure and other adjoining elements before fabrication where possible.

PART 2 - PRODUCTS

2.1 ACCEPTABLE PRODUCTS AND MANUFACTURERS

A. Acceptable Products and Manufacturers:
   1. Other components:
      a. Basis of design manufacturer: Design is based on custom systems and products by LGL Animal Care Products, to establish standard of quality.
      b. Equivalent systems and products by the following manufacturers may be acceptable provided they comply with requirements of Contract Documents.
         1) Smithsonian National Zoological Park approved equal.

2.2 MATERIALS

A. Stainless Steel: Provide Type 304, complying with referenced ASTM standards.
   1. Plate, sheet and strip: ASTM A666.
   2. Bars and shapes: ASTM A276.
   3. Tubing: ASTM A269.

B. Stainless Steel Wire Mesh: Provide woven wire stainless steel mesh, of the following diameters, configurations, and weave and crimp styles.
   1. Mesh for use in giant panda areas:
      a. 1/4 inch diameter wire, 2 inch x 2 inch centers
      b. Plain weave, lock crimp.

2.3 ACCESSORIES

A. Fasteners and Anchors:
   1. General:
      a. Provide Type 304 stainless-steel fasteners.
      b. Select fasteners for type, grade, and class required for components being fastened and conditions of installation.
   2. Stainless-steel bolts and nuts: Regular hexagon-head annealed stainless-steel bolts, nuts and, where indicated, flat washers; ASTM F593 for bolts and ASTM F594 for nuts, Alloy Group 1.
   3. Anchor bolts: Stainless steel.
   4. Lag bolts: ASME B18.2.1; Stainless steel.
   5. Machine screws: ASME B18.6.3; Stainless steel.
   6. Cast-in-place anchors in concrete:
      a. Anchors capable of sustaining, without failure, load equal to not less than four times load imposed, as determined by testing according to ASTM E488, conducted by a qualified independent testing agency.
      b. Threaded or wedge type; galvanized ferrous castings, either ASTM A47 malleable iron or ASTM A27 cast steel. Provide bolts, washers, and shims as required for complete installation, hot-dip galvanized per ASTM A153.

7. Expansion anchors:
   a. Anchor bolt and sleeve assembly with capability to sustain, without failure, load equal to six times load imposed when installed in unit masonry and four times load imposed when installed in concrete, as determined by testing according to ASTM E488, conducted by a qualified independent testing agency.
   b. Material: Alloy Group 1 stainless-steel bolts complying with ASTM F593, and nuts complying with ASTM F594.

B. Welding Rods and Bare Electrodes: Select according to AWS specifications for each metal alloy welded.

2.4 SHOP FINISHING

A. Stainless Steel:
   1. General: Passivate and rinse surfaces. Remove embedded foreign matter and leave surfaces chemically clean.
   2. Stainless steel:
      a. Sheet: NAAMM No. 2B, bright mill finish.
      b. Other items: As-fabricated mill finish.

2.5 FABRICATION - GENERAL

A. Fabricate items to dimensions, details, and configurations indicated on Drawings.

B. Assembly:
   1. Pre-assemble items in shop to greatest extent possible.
   2. Disassemble units as necessary for shipping and handling limitations.
   3. Clearly mark units for re-assembly and coordinated installation.

C. Fabricate Work to dimensions indicated or accepted on Shop Drawings.

D. Welding:
   1. Weld corners and seams continuously, complying with AWS recommendations.
   2. At exposed connections, grind exposed welds smooth and flush to match and blend with adjoining surfaces.

E. Anchors and Fasteners:
   1. Provide for required anchorage, coordinated with supporting structure.
   2. Fabricate and space anchoring devices to provide adequate support for intended use.
   3. Cut, reinforce, drill and tap metal fabrications as indicated to receive hardware and similar items.
   4. Use exposed fasteners of type indicated or, if not indicated, Phillips flathead (counter-sunk) screws or bolts.

2.6 WIRE MESH PARTITIONS AND ANIMAL ENCLOSURES

A. Stainless Steel Wire Mesh Partitions and Animal Enclosures.:
   1. Fabricate from structural stainless steel shapes, plates and bars, of welded construction using mitered joints for field connection, unless otherwise indicated.
   2. Cut, drill and tap units to receive hardware and similar items.

3. Stainless steel wire mesh:
   a. Provide mesh of diameter, configuration, and weave and crimp style as required for each location, as specified above.
   b. Provide continuous weld where wire mesh attaches to framing members.

PART 3 - EXECUTION

3.1 EXAMINATION

A. Examine substrates and adjoining construction, and conditions under which Work is to be installed. Do not proceed with Work until unsatisfactory conditions are corrected.

3.2 INSTALLATION

A. Install components and systems in accordance with manufacturer's instructions and final Shop Drawings.

B. Cutting, Fitting and Placement:
   1. Cut, drill and fit fabrications as required.
   2. Set Work accurately in location, alignment and elevation, plumb, level, true and free of rack, measured from established lines and levels.
   3. Fit exposed connections accurately together to form tight hairline joints.

C. Fastening:
   1. Secure fabrications to in-place construction by using threaded stainless steel fasteners and anchors.
   2. Anchor securely as required for intended use and to comply with performance rqeuirements.
   3. Do not use powder driven anchors.

D. Welding:
   1. Comply with AWS Code for procedures of manual shielded metal-arc welding, appearance and quality of welds made, and methods used in correcting welds.
   2. Grind exposed joints smooth.

E. Adjust framing prior to anchoring to ensure matching alignment at abutting joints.
   1. Anchor brackets and flanges to concrete and masonry with bolts and expansion shields.
   2. Provide openings in mesh as required for passage of piping and similar items and equipment.

F. Immediately after installation, clean field welds, bolted connections and abraded areas.

G. Clean surfaces and lubricate joints and bearings in accordance with manufacturer's instructions.

H. Protect equipment from deterioration or damage until final completion.

END OF SECTION 05505

SECTION 061000 - ROUGH CARPENTRY

PART 1 - GENERAL

1.1 RELATED DOCUMENTS

A. Drawings and general provisions of the Contract, including General and Supplementary Conditions and Division 01 Specification Sections, apply to this Section.

1.2 SUMMARY

A. Section Includes:

1. Framing with dimension lumber.
2. Rooftop equipment bases and support curbs.
3. Wood blocking and nailers.

B. Refer to Sheet S001 for structural requirements.

1.3 DEFINITIONS

A. Exposed Framing: Framing not concealed by other construction.

B. Dimension Lumber: Lumber of 2 inches nominal or greater but less than 5 inches nominal in least dimension.

C. Timber: Lumber of 5 inches nominal or greater in least dimension.

D. Lumber grading agencies, and the abbreviations used to reference them, include the following:

1. NeLMA: Northeastern Lumber Manufacturers' Association.
2. NLGA: National Lumber Grades Authority.
3. RIS: Redwood Inspection Service.
4. SPIB: The Southern Pine Inspection Bureau.
5. WCLIB: West Coast Lumber Inspection Bureau.
6. WWPA: Western Wood Products Association.

1.4 ACTION SUBMITTALS

A. Product Data: For each type of process and factory-fabricated product. Indicate component materials and dimensions and include construction and application details.

B. Fastener Patterns: Full-size templates for fasteners in exposed framing.

1.5 INFORMATIONAL SUBMITTALS

A. Material Certificates: For dimension lumber specified to comply with minimum allowable unit stresses. Indicate species and grade selected for each use and design values approved by the ALSC Board of Review.

B. Evaluation Reports: For the following, from ICC-ES:
   1. Fire-retardant-treated wood.
   2. Shear panels.
   3. Power-driven fasteners.
   4. Powder-actuated fasteners.
   5. Expansion anchors.
   6. Metal framing anchors.

1.6 QUALITY ASSURANCE

A. Testing Agency Qualifications: For testing agency providing classification marking for fire-retardant treated material, an inspection agency acceptable to authorities having jurisdiction that periodically performs inspections to verify that the material bearing the classification marking is representative of the material tested.

1.7 DELIVERY, STORAGE, AND HANDLING

A. Stack lumber flat with spacers beneath and between each bundle to provide air circulation. Protect lumber from weather by covering with waterproof sheeting, securely anchored. Provide for air circulation around stacks and under coverings.

PART 2 - PRODUCTS

2.1 WOOD PRODUCTS, GENERAL

A. Certified Wood: Materials shall be produced from wood obtained from forests certified by an FSC-accredited certification body to comply with FSC STD-01-001, "FSC Principles and Criteria for Forest Stewardship.

B. Lumber: DOC PS 20 and applicable rules of grading agencies indicated. If no grading agency is indicated, provide lumber that complies with the applicable rules of any rules-writing agency certified by the ALSC Board of Review. Provide lumber graded by an agency certified by the ALSC Board of Review to inspect and grade lumber under the rules indicated.

   1. Factory mark each piece of lumber with grade stamp of grading agency.
   2. For exposed lumber indicated to receive a stained or natural finish, mark grade stamp on end or back of each piece.
   3. Where nominal sizes are indicated, provide actual sizes required by DOC PS 20 for moisture content specified. Where actual sizes are indicated, they are minimum dressed sizes for dry lumber.
   4. Provide dressed lumber, S4S, unless otherwise indicated.

C. Maximum Moisture Content of Lumber: 19 percent unless otherwise indicated.

2.2 DIMENSION LUMBER FRAMING

A. Joists, Rafters, and Other Framing Not Listed Above: Refer to design notes on S001.

2.3 MISCELLANEOUS LUMBER

A. General: Provide miscellaneous lumber indicated and lumber for support or attachment of other construction, including the following:

1. Blocking.
2. Nailers.
3. Rooftop equipment bases and support curbs.
4. Cants.
5. Furring.
6. Grounds.
7. Utility shelving.

B. For items of dimension lumber size, provide Construction or No. 2 grade lumber and the following species:

1. Mixed southern pine; SPIB.

C. For concealed boards, provide lumber with 19 percent maximum moisture content and the following species and grades:

1. Mixed southern pine; No. 2 grade; SPIB.

D. For blocking not used for attachment of other construction, Utility, Stud, or No. 3 grade lumber of any species may be used provided that it is cut and selected to eliminate defects that will interfere with its attachment and purpose.

E. For blocking and nailers used for attachment of other construction, select and cut lumber to eliminate knots and other defects that will interfere with attachment of other work.

F. For furring strips for installing plywood or hardboard paneling, select boards with no knots capable of producing bent-over nails and damage to paneling.

2.4 FASTENERS

A. General: Provide fasteners of size and type indicated that comply with requirements specified in this article for material and manufacture.

1. Where rough carpentry is exposed to weather, in ground contact, pressure-preservative treated, or in area of high relative humidity, provide fasteners of Type 304 stainless steel.

B. Nails, Brads, and Staples: ASTM F 1667.

C. Power-Driven Fasteners: NES NER-272.

D. Wood Screws: ASME B18.6.1.

E. Lag Bolts: ASME B18.2.1.

F. Bolts: Steel bolts complying with ASTM A 307, Grade A; with ASTM A 563 hex nuts and, where indicated, flat washers.

G. Expansion Anchors: Anchor bolt and sleeve assembly of material indicated below with capability to sustain, without failure, a load equal to six times the load imposed when installed in unit masonry assemblies and equal to four times the load imposed when installed in concrete as determined by testing per ASTM E 488 conducted by a qualified independent testing and inspecting agency.

1. Material: Carbon-steel components, zinc plated to comply with ASTM B 633, Class Fe/Zn 5.
2. Material: Stainless steel with bolts and nuts complying with ASTM F 593 and ASTM F 594, Alloy Group 1 or 2.

2.5 MISCELLANEOUS MATERIALS

A. Sill-Sealer Gaskets: Glass-fiber-resilient insulation, fabricated in strip form, for use as a sill sealer; 1-inch nominal thickness, compressible to 1/32 inch; selected from manufacturer's standard widths to suit width of sill members indicated.

B. Sill-Sealer Gaskets: Closed-cell neoprene foam, 1/4 inch thick, selected from manufacturer's standard widths to suit width of sill members indicated.

C. Flexible Flashing: Composite, self-adhesive, flashing product consisting of a pliable, butyl rubber or rubberized-asphalt compound, bonded to a high-density polyethylene film, aluminum foil, or spunbonded polyolefin to produce an overall thickness of not less than 0.025 inch.

D. Water-Repellent Preservative: NWWDA-tested and -accepted formulation containing 3-iodo-2-propynyl butyl carbamate, combined with an insecticide containing chloropyrifos as its active ingredient.

PART 3 - EXECUTION

3.1 INSTALLATION, GENERAL

A. Set rough carpentry to required levels and lines, with members plumb, true to line, cut, and fitted. Fit rough carpentry to other construction; scribe and cope as needed for accurate fit. Locate nailers, blocking, and similar supports to comply with requirements for attaching other construction.

B. Framing Standard: Comply with AF&PA's WCD 1, "Details for Conventional Wood Frame Construction," unless otherwise indicated.

C. Metal Framing Anchors: Install metal framing anchors to comply with manufacturer's written instructions. Install fasteners through each fastener hole.

D. Install sill sealer gasket to form continuous seal between sill plates and foundation walls.

E. Do not splice structural members between supports unless otherwise indicated.

F. Provide blocking and framing as indicated and as required to support facing materials, fixtures, specialty items, and trim.

1. Provide metal clips for fastening gypsum board or lath at corners and intersections where framing or blocking does not provide a surface for fastening edges of panels. Space clips not more than 16 inches o.c.

G. Provide fire blocking in furred spaces, stud spaces, and other concealed cavities as indicated and as follows:

1. Fire block furred spaces of walls, at each floor level, at ceiling, and at not more than 96 inches o.c. with solid wood blocking or noncombustible materials accurately fitted to close furred spaces.
2. Fire block concealed spaces of wood-framed walls and partitions at each floor level, at ceiling line of top story, and at not more than 96 inches o.c. Where fire blocking is not inherent in framing system used, provide closely fitted solid wood blocks of same width as framing members and 2-inch nominal- thickness.
3. Fire block concealed spaces between floor sleepers with same material as sleepers to limit concealed spaces to not more than 100 sq. ft. and to solidly fill space below partitions.
4. Fire block concealed spaces behind combustible cornices and exterior trim at not more than 20 feet o.c.

H. Sort and select lumber so that natural characteristics will not interfere with installation or with fastening other materials to lumber. Do not use materials with defects that interfere with function of member or pieces that are too small to use with minimum number of joints or optimum joint arrangement.

I. Comply with AWPA M4 for applying field treatment to cut surfaces of preservative-treated lumber.

1. Use inorganic boron for items that are continuously protected from liquid water.
2. Use copper naphthenate for items not continuously protected from liquid water.

J. Securely attach rough carpentry work to substrate by anchoring and fastening as indicated, complying with the following:

1. NES NER-272 for power-driven fasteners.
2. Table 2304.9.1, "Fastening Schedule," in ICC's International Building Code.
3. Table R602.3(1), "Fastener Schedule for Structural Members," and Table R602.3(2), "Alternate Attachments," in ICC's International Residential Code for One- and Two-Family Dwellings.

K. Use steel common nails unless otherwise indicated. Select fasteners of size that will not fully penetrate members where opposite side will be exposed to view or will receive finish materials. Make tight connections between members. Install fasteners without splitting wood. Drive nails snug but do not countersink nail heads unless otherwise indicated.

L. For exposed work, arrange fasteners in straight rows parallel with edges of members, with fasteners evenly spaced, and with adjacent rows staggered.

1. Comply with approved fastener patterns where applicable. Before fastening, mark fastener locations, using a template made of sheet metal, plastic, or cardboard.
2. Use finishing nails unless otherwise indicated. Countersink nail heads and fill holes with wood filler.
3. Use common nails unless otherwise indicated. Drive nails snug but do not countersink nail heads.

3.2 WOOD BLOCKING, AND NAILER INSTALLATION

A. Install where indicated and where required for attaching other work. Form to shapes indicated and cut as required for true line and level of attached work. Coordinate locations with other work involved.

B. Attach items to substrates to support applied loading. Recess bolts and nuts flush with surfaces unless otherwise indicated.

C. Where wood-preservative-treated lumber is installed adjacent to metal decking, install continuous flexible flashing separator between wood and metal decking.

D. Provide permanent grounds of dressed, pressure-preservative-treated, key-beveled lumber not less than 1-1/2 inches wide and of thickness required to bring face of ground to exact thickness of finish material. Remove temporary grounds when no longer required.

3.3 PROTECTION

A. Protect wood that has been treated with inorganic boron (SBX) from weather. If, despite protection, inorganic boron-treated wood becomes wet, apply EPA-registered borate treatment. Apply borate solution by spraying to comply with EPA-registered label.

B. Protect rough carpentry from weather. If, despite protection, rough carpentry becomes sufficiently wet that moisture content exceeds that specified, apply EPA-registered borate treatment. Apply borate solution by spraying to comply with EPA-registered label.

END OF SECTION 061000

SECTION 075423 - THERMOPLASTIC POLYOLEFIN (TPO) ROOFING

PART 1 - GENERAL

1.1 RELATED DOCUMENTS

A. Drawings and general provisions of the Contract, including General and Supplementary Conditions and Division 01 Specification Sections, apply to this Section.

1.2 SUMMARY

A. Section Includes:

1. Patch and repair of adhered thermoplastic polyolefin (TPO) roofing system.

B. Related Requirements:

1. Section 061000 "Rough Carpentry" for wood nailers, curbs, and blocking; and for wood-based, structural-use roof deck panels.
2. Section 079200 "Joint Sealants" for joint sealants, joint fillers, and joint preparation.

1.3 DEFINITIONS

A. Roofing Terminology: Definitions in ASTM D 1079 and glossary in NRCA's "The NRCA Roofing and Waterproofing Manual" apply to work of this Section.

1.4 PREINSTALLATION MEETINGS

A. Pre-Installation Conference:

1. Meet with Owner, Architect, Owner's insurer if applicable, testing and inspecting agency representative, roofing Installer, roofing system manufacturer's representative, deck Installer, and installers whose work interfaces with or affects roofing, including installers of roof accessories and roof-mounted equipment.
2. Review methods and procedures related to roofing installation, including manufacturer's written instructions.
3. Review and finalize construction schedule, and verify availability of materials, Installer's personnel, equipment, and facilities needed to make progress and avoid delays.
4. Review deck substrate requirements for conditions and finishes, including flatness and fastening.
5. Review structural loading limitations of roof deck during and after roofing.
6. Review base flashings, special roofing details, roof drainage, roof penetrations, equipment curbs, and condition of other construction that affects roofing system.
7. Review governing regulations and requirements for insurance and certificates if applicable.

8. Review temporary protection requirements for roofing system during and after installation.
9. Review roof observation and repair procedures after roofing installation.

1.5 ACTION SUBMITTALS

A. Product Data: For each type of product.

B. Shop Drawings: For roofing system. Include plans, elevations, sections, details, and attachments to other work, including:

1. Base flashings and membrane terminations.

C. Samples for Verification: For the following products:

1. Sheet roofing, of color required.

1.6 INFORMATIONAL SUBMITTALS

A. Qualification Data: For Installer and manufacturer.

B. Manufacturer Certificates: Signed by roofing manufacturer certifying that roofing system complies with requirements specified in "Performance Requirements" Article.

1. Submit evidence of compliance with performance requirements.

C. Product Test Reports: For components of roofing system, tests performed by manufacturer and witnessed by a qualified testing agency.

D. Research/Evaluation Reports: For components of roofing system, from ICC-ES.

E. Field quality-control reports.

F. Sample Warranties: For manufacturer's special warranties.

1.7 CLOSEOUT SUBMITTALS

A. Maintenance Data: For roofing system to include in maintenance manuals.

1.8 QUALITY ASSURANCE

A. Installer Qualifications: A qualified firm that is approved, authorized, or licensed by roofing system manufacturer to install manufacturer's product and that is eligible to receive manufacturer's special warranty.

1.9 DELIVERY, STORAGE, AND HANDLING

A. Deliver roofing materials to Project site in original containers with seals unbroken and labeled with manufacturer's name, product brand name and type, date of manufacture, approval or listing agency markings, and directions for storing and mixing with other components.

B. Store liquid materials in their original undamaged containers in a clean, dry, protected location and within the temperature range required by roofing system manufacturer. Protect stored liquid material from direct sunlight.

1. Discard and legally dispose of liquid material that cannot be applied within its stated shelf life.

C. Protect roof insulation materials from physical damage and from deterioration by sunlight, moisture, soiling, and other sources. Store in a dry location. Comply with insulation manufacturer's written instructions for handling, storing, and protecting during installation.

D. Handle and store roofing materials, and place equipment in a manner to avoid permanent deflection of deck.

1.10 FIELD CONDITIONS

A. Weather Limitations: Proceed with installation only when existing and forecasted weather conditions permit roofing system to be installed according to manufacturer's written instructions and warranty requirements.

1.11 WARRANTY

A. Special Warranty: Manufacturer agrees to repair or replace components of roofing system that fail in materials or workmanship within specified warranty period.

1. Special warranty includes roofing, base flashings, fasteners, roofing accessories, and other components of roofing system.
2. Warranty Period: 5 years from date of Substantial Completion.

PART 2 - PRODUCTS

2.1 PERFORMANCE REQUIREMENTS

A. General Performance: Installed roofing and base flashings shall withstand specified uplift pressures, thermally induced movement, and exposure to weather without failure due to defective manufacture, fabrication, installation, or other defects in construction. Roofing and base flashings shall remain watertight.

1. Accelerated Weathering: Roofing system shall withstand 2000 hours of exposure when tested according to ASTM G 152, ASTM G 154, or ASTM G 155.

2. Impact Resistance: Roofing system shall resist impact damage when tested according to ASTM D 3746 or ASTM D 4272.

B. Material Compatibility: Roofing materials shall be compatible with one another and adjacent materials under conditions of service and application required, as demonstrated by roofing manufacturer based on testing and field experience.

C. Roofing System Design: Tested by a qualified testing agency to resist the following uplift pressures:

1. Corner Uplift Pressure: 25 lbf/sq. ft..
2. Perimeter Uplift Pressure: 25 lbf/sq. ft..
3. Field-of-Roof Uplift Pressure: 25 lbf/sq. ft..

D. Energy Star Listing: Roofing system shall be listed on the DOE's ENERGY STAR "Roof Products Qualified Product List" for low-slope roof products.

E. Fire-Resistance Ratings: Comply with fire-resistance-rated assembly designs indicated. Identify products with appropriate markings of applicable testing agency.

2.2 TPO ROOFING

A. Fabric-Reinforced TPO Sheet: ASTM D 6878, internally fabric- or scrim-reinforced, uniform, flexible TPO sheet.

1. Thickness: To match existing or 60 mils, nominal.
2. Exposed Face Color: To match existing or White.

2.3 AUXILIARY ROOFING MATERIALS

A. General: Auxiliary materials recommended by roofing system manufacturer for intended use and compatible with roofing.

1. Liquid-type auxiliary materials shall comply with VOC limits of authorities having jurisdiction.
2. Adhesives and sealants that are not on the exterior side of weather barrier shall comply with the following limits for VOC content:

a. Plastic Foam Adhesives: 50 g/L.
b. Gypsum Board and Panel Adhesives: 50 g/L.
c. Multipurpose Construction Adhesives: 70 g/L.
d. Fiberglass Adhesives: 80 g/L.
e. Single-Ply Roof Membrane Adhesives: 250 g/L.
f. Single-Ply Roof Membrane Sealants: 450 g/L.
g. Nonmembrane Roof Sealants: 300 g/L.
h. Sealant Primers for Nonporous Substrates: 250 g/L.
i. Sealant Primers for Porous Substrates: 775 g/L.
j. Other Adhesives and Sealants: 250 g/L.

B. Sheet Flashing: Manufacturer's standard unreinforced TPO sheet flashing, 55 mils thick, minimum, of same color as TPO sheet.

C. Bonding Adhesive: Manufacturer's standard, water based.

D. Slip Sheet: Manufacturer's standard, of thickness required for application.

E. Fasteners: Factory-coated steel fasteners and metal or plastic plates complying with corrosion-resistance provisions in FM Global 4470, designed for fastening roofing to substrate, and acceptable to roofing system manufacturer.

F. Miscellaneous Accessories: Provide pourable sealers, preformed cone and vent sheet flashings, preformed inside and outside corner sheet flashings, T-joint covers, lap sealants, termination reglets, and other accessories.

PART 3 - EXECUTION

3.1 EXAMINATION

A. Examine substrates, areas, and conditions, with Installer present, for compliance with requirements and other conditions affecting performance of the Work:

1. Verify that roof openings and penetrations are in place, curbs are set and braced, and roof-drain bodies are securely clamped in place.
2. Verify that wood blocking, curbs, and nailers are securely anchored to roof deck at penetrations and terminations and that nailers match thicknesses of insulation.

B. Proceed with installation only after unsatisfactory conditions have been corrected.

3.2 PREPARATION

A. Clean substrate of dust, debris, moisture, and other substances detrimental to roofing installation according to roofing system manufacturer's written instructions. Remove sharp projections.

B. Prevent materials from entering and clogging roof drains and conductors and from spilling or migrating onto surfaces of other construction. Remove roof-drain plugs when no work is taking place or when rain is forecast.

3.3 ROOFING INSTALLATION, GENERAL

A. Install roofing system according to roofing system manufacturer's written instructions.

B. Complete terminations and base flashings and provide temporary seals to prevent water from entering completed sections of roofing system at the end of the workday or when rain is forecast. Remove and discard temporary seals before beginning work on adjoining roofing.

C. Install roofing and auxiliary materials to tie in to existing roofing to maintain weathertightness of transition and to not void warranty for existing roofing system.

3.4 ADHERED ROOFING INSTALLATION

A. Adhere roofing over area to receive roofing according to roofing system manufacturer's written instructions. Unroll roofing and allow to relax before retaining.

B. Start installation of roofing in presence of roofing system manufacturer's technical personnel.

C. Accurately align roofing, and maintain uniform side and end laps of minimum dimensions required by manufacturer. Stagger end laps.

D. Bonding Adhesive: Apply to substrate and underside of roofing at rate required by manufacturer, and allow to partially dry before installing roofing. Do not apply to splice area of roofing.

E. In addition to adhering, mechanically fasten roofing securely at terminations, penetrations, and perimeter of roofing.

F. Apply roofing with side laps shingled with slope of roof deck where possible.

G. Seams: Clean seam areas, overlap roofing, and hot-air weld side and end laps of roofing and sheet flashings according to manufacturer's written instructions, to ensure a watertight seam installation.

1. Test lap edges with probe to verify seam weld continuity. Apply lap sealant to seal cut edges of sheet.
2. Verify field strength of seams a minimum of twice daily, and repair seam sample areas.
3. Repair tears, voids, and lapped seams in roofing that do not comply with requirements.

H. Spread sealant bed over deck-drain flange at roof drains, and securely seal roofing in place with clamping ring.

3.5 FIELD QUALITY CONTROL

A. Testing Agency: Engage a qualified testing agency to inspect substrate conditions, surface preparation, membrane application, flashings, protection, and drainage components, and to furnish reports to Architect.

B. Flood Testing: Flood test each roofing area for leaks, according to recommendations in ASTM D 5957, after completing roofing and flashing but before overlying construction is placed. Install temporary containment assemblies, plug or dam drains, and flood with potable water.

1. Flood to an average depth of 2-1/2 inches with a minimum depth of 1 inch and not exceeding a depth of 4 inches. Maintain 2 inches of clearance from top of base flashing.
2. Flood each area for 24 hours.

3. After flood testing, repair leaks, repeat flood tests, and make further repairs until roofing and flashing installations are watertight.

C. Final Roof Inspection: Arrange for roofing system manufacturer's technical personnel to inspect roofing installation on completion.

D. Repair or remove and replace components of roofing system where inspections indicate that they do not comply with specified requirements.

E. Additional testing and inspecting, at Contractor's expense, will be performed to determine if replaced or additional work complies with specified requirements.

3.6 PROTECTING AND CLEANING

A. Protect roofing system from damage and wear during remainder of construction period. When remaining construction does not affect or endanger roofing, inspect roofing for deterioration and damage, describing its nature and extent in a written report, with copies to Architect and Owner.

B. Correct deficiencies in or remove roofing system that does not comply with requirements, repair substrates, and repair or reinstall roofing system to a condition free of damage and deterioration at time of Substantial Completion and according to warranty requirements.

C. Clean overspray and spillage from adjacent construction using cleaning agents and procedures recommended by manufacturer of affected construction.

END OF SECTION 075423

SECTION 076200 - SHEET METAL FLASHING AND TRIM

1.1 RELATED DOCUMENTS

A. Drawings and general provisions of the Contract, including General and Supplementary Conditions and Division 01 Specification Sections, apply to this Section.

1.2 SUMMARY

A. Section Includes:

1. Manufactured through-wall flashing.

B. Related Requirements:

1. Section 061000 "Rough Carpentry" for wood nailers, curbs, and blocking.

1.3 SECTION REQUIREMENTS

A. Submittals: Product Data, Shop Drawings, and Samples.

B. Comply with SMACNA's "Architectural Sheet Metal Manual." Conform to dimensions and profiles shown unless more stringent requirements are indicated.

C. Coordinate installation of sheet metal flashing and trim with interfacing and adjoining construction to provide a leakproof, secure, and noncorrosive installation.

PART 2 - PRODUCTS

2.1 SHEET METAL

A. General:Protect mechanical and other finishes on exposed surfaces from damage by applying astrippable, temporary protective film before shipping.

B. Stainless-Steel Sheet: ASTM A 240/A 240M, Type 304, with No. 2D finish; not less than 0.016 inch (0.4 mm) thick.

2.2 ACCESSORIES

A. Felt Underlayment: ASTM D 226, Type II (No. 30), asphalt-saturated organic felts.

B. Self-Adhering Sheet Underlayment, High Temperature: Butyl or SBS-modified asphalt; slip-resisting-polyethylene surfaced; with release paper backing; cold applied. Stable after testing at 240 deg F (116 deg C) and passes after testing at minus 20 deg F (29 deg C); ASTM D 1970.

C. Slip Sheet: Building paper, 3-lb/100 sq. ft. (0.16-kg/sq. m) minimum, rosin sized.

D. Fasteners: Wood screws, annular-threaded nails, self-tapping screws, self-locking rivets and bolts, and other suitable fasteners.

1. Exposed Fasteners: Heads matching color of sheet metal roofing using plastic caps or factory-applied coating.
2. Fasteners for Stainless-Steel Sheet: Series 300 stainless steel.

E. Solder for Stainless Steel: ASTM B 32, Grade Sn60, with acid flux of type recommended by stainless-steel sheet manufacturer.

F. Solder for Zinc-Tin Alloy-Coated Stainless Steel: ASTM B 32, 100 percent tin.

G. Butyl Sealant: ASTM C 1311, solvent-release butyl rubber sealant.

H. Bituminous Coating: Cold-applied asphalt emulsion complying with ASTM D 1187.

2.3 FABRICATION

A. Fabricate sheet metal flashing and trim to comply with recommendations in SMACNA's "Architectural Sheet Metal Manual" that apply to the design, dimensions, metal, and other characteristics of the item indicated.

B. Expansion Provisions: Where lapped expansion provisions cannot be used, form expansion joints of intermeshing hooked flanges, not less than 1 inch (25 mm) deep, filled with butyl sealant concealed within joints.

C. Fabrication Tolerances: Fabricate sheet metal flashing and trim that is capable of installation to tolerances specified in MCA's "Guide Specification for Residential Metal Roofing."

PART 3 - EXECUTION

3.1 INSTALLATION

A. Comply with SMACNA's "Architectural Sheet Metal Manual." Allow for thermal expansion; set true to line and level. Install Work with laps, joints, and seams permanently watertight and weatherproof; conceal fasteners where possible.

B. Sealed Joints: Form nonexpansion, but movable, joints in metal to accommodate elastomeric sealant to comply with SMACNA standards.

C. Fabricate nonmoving seams in sheet metal with flat-lock seams.

D. Separate dissimilar metals with a bituminous coating or polymer-modified, bituminous sheet underlayment.

END OF SECTION 076200

SECTION 078413 - PENETRATION FIRESTOPPING

PART 1 - GENERAL

1.01 RELATED DOCUMENTS

A. Drawings and General Provision of Contract, including General and Special Conditions and Division 1 Specification Section, apply to work of this section.

1.02 SUMMARY

A. Firestopping is defined as the process of furnishing and installing a material, or combination of materials, in various constructions, to maintain an effective barrier against the spread of flame, smoke and gases and to maintain the integrity of fire-rated construction.

1.03 DEFINITIONS

A. COTR: Contracting Officer Technical Representative

B. FM: FM Global (Factory Mutual)

C. FPE: Fire Protection Engineer

D. Furnish: To supply the stated equipment or materials

E. Install: To set in position and connect or adjust for use

F. NFPA: National Fire Protection Association

G. NICET: National Institute for Certification in Engineering Technologies

H. OSHEM: Office of Safety Health and Environmental Management

I. Provide: To furnish and install the stated equipment or materials

J. UL: Underwriters Laboratories

1.04 SYSTEM DESCRIPTION

A. Firestopping shall be provided in the following locations:

1. Duct, cable, conduit, piping and their supports that penetrate through floor slabs, fire-rated partitions, fire walls, and exterior walls where rated. Firestopping shall be provided for all new penetrations; penetrations left open by demolition/removal of duct, cable, conduit, and pipe; damaged fire stopping, and existing abandoned penetrations in the contract area. Unless otherwise specified or shown on the drawings, the Contractor shall assume that all floor slabs are two-hour, fire-rated. Locations of fire walls or partitions are indicated on the drawings.

2. Penetrations of vertical shafts. Assume 2-Hr barrier unless noted otherwise.

3. Around openings and penetrations through fire-rated ceiling assemblies.

4. Joint systems for floor-to-floor, wall-to-wall, floor-to-wall, and head of wall applications.

B. Other locations shown specifically on the drawings or where called for in other sections of the specifications.

1.05 PERFORMANCE REQUIREMENTS

A. Materials or combinations of materials used for fire stopping shall be noncombustible and comply with the following as a minimum:

1. Flame Spread: 25 or less, as measured by ASTM E-84

2. Smoke Developed: 100 or less, as measured by ASTM E-84

B. Fire stopping shall be asbestos free and shall be non-toxic to humans during installation and fire conditions

C. Examination Of Work By The Contractor

1. It shall be the responsibility of the prime contractor to provide firestopping for the entire project. The Contractor shall examine area to receive fire stopping prior to beginning work or to submitting the data required under 1.08, Submittals.

2. Data to be submitted shall be based on the findings of the Contractor's examination.

1.06 SUBMITTALS:

A. Submit the following for approval by the COTR and the OSHEM Fire Protection Engineer. Submit applicable data for each condition specified.

1. Certificates of conformance or compliance, accompanied by classification by a nationally recognized testing lab or by other supporting evidence satisfactory to the COTR and the OSHEM Fire Protection Engineer, that the material or combination of materials used, meet the requirements specified for flame spread, smoke developed, and fire resistance.

2. Manufacturer's catalog data for all materials and prefabricated devices, including descriptions sufficient to identify them on the job, and instructions for installation.

3. Completed construction details (shop drawings) showing proposed material, reinforcement, anchorage, fastenings and method of installation. Clearly show which product will be used for each application. Fire stopping materials of different manufacturers shall not be intermixed. Do not submit multiple products for the same application. Details for fire stopping of penetrations and joint systems shall show compliance with the appropriate UL Design Number. Drawings shall accurately reflect job conditions pursuant to paragraph 1.07 C, Examination of the Work by Contractor.

4. Provide as-built drawings showing all penetration locations on floor plans. Identification key shall provide the rating and construction of the assembly penetrated, and the fire stopping assembly used at each location.

1.07 QUALITY ASSURANCE

A. Manufacturers Qualifications: The publications listed below form a part of this specification to the extent referenced. The publications are referred to in the text by the basic designation only.

1. American Society for Testing and Materials (ASTM) Publications:

a) E-84 Standard Test Method for Surface Burning Characteristics of Building Materials

b) E119 Standard Test Method For Fire Tests of Building Construction and Materials

c) E814 Test Method of Fire Tests of Through-Penetration Fire stops

d) E1966 Fire Resistive Joint Systems

e) EB99 Cyclic Movement And Measuring The Min & Max Joint Widths of Arch Joint Systems

2. Underwriters Laboratories (UL) Publications:

a) UL-1479 Fire Tests of Through-Penetration Fire Stops

b) UL-2079 Tests for Fire Resistance of Building Joint Systems

c) FRD Fire Resistance Directory

B. Installer's Qualifications. Provide data to shown that the firm has at least two years experience in the installation or application of systems similar in complexity to those required for this project. In addition, provide data to show that the firm is licensed by the manufacturer and has successfully completed at least 5 comparable scale projects using the manufacturer's systems.

C. Pre-Installation Conference

1. Conduct a pre-installation conference with all sub-contractor representatives to verify project requirements, substrate conditions, manufacturer's installation instructions, and manufacturer's warranty requirements.

1.08 DELIVERY, STORAGE, AND HANDLING

A. Deliver products to project site in original, unopened packages with intact and legible manufacturers' labels identifying product and manufacturer, date of manufacture, and shelf life if applicable.

B. Store materials inside, under cover, above ground, and kept dry and protected from physical damage until ready for use. Remove from site and discard wet or damaged materials.

1.09 COORDINATION

A. Coordinate installation of all penetration firestopping systems with mechanical, electrical, fire protection, and other trades so that installation is complete and to minimize rework due to the addition of penetrants or other modifications.

1.10 WARRANTY

A. Provide a written warranty by the manufacturer against defects in manufacturing and materials and by the installer against defects in workmanship.

PART 2 - PRODUCTS

2.01 GENERAL

A. All firestopping used throughout the project shall be the products of a single manufacturer.

2.02 MANUFACTURERS

A. Hilti

B. 3M

C. Specfied Technologies, Inc

D. Nelson

E. Any approved manufacturer

2.03 FIRE RESISTANCE RATING

A. Firestop systems shall be UL Fire Resistance listed or FM P7825a approved with "F" rating at least equal to fire-rating of fire wall or floor in which penetrated openings are to be protected, except that "F" rating may be 3 hours in through-penetrations of 4 hour fire rated wall or floor. Firestop systems shall also have "T" rating where required.

2.04 THROUGH-PENETRATIONS

a) Firestopping materials for through-penetrations shall provide "F" and "T" fire resistance ratings in accordance with ASTM E 814 or UL 1479.

2.05 CONSTRUCTION JOINTS AND GAPS

A. Construction joints and gaps shall be provided with firestopping materials and systems that have been tested per ASTM E 119, ASTM E 1966 or UL 2079 to meet the required fire resistance rating. Systems installed at construction joints shall meet the cycling requirements of ASTM E 1399 or UL 2079.

PART 3 - EXECUTION

3.01 SURFACE PREPARATION:

A. Prior to application, remove from surfaces all dirt, grease, oil, loose materials, rust, or other substances that may affect proper fitting or required fire resistance of the fire stopping material for cast-in-place firestop devices, formwork or metal deck to receive device prior to concrete placement

and shall be sound and capable of supporting device. Prepare surface as recommended by the manufacturer.

3.02 INSTALLATION:

A. Install in accordance with approved construction drawings (shop drawings), approved manufacturer's literature, installation instructions, UL Design Number or UL Report, and the following requirements:

B. Fire stopping materials shall completely fill the void space regardless of geometric configuration, subject to tolerances established by the manufacturer when intumescent materials are used.

C. Apply fire stopping materials at penetrations of insulated pipes and ducts, prior to application of the insulation. If insulation is already in place, remove it at the penetration prior to application of the fire stopping materials, except where intumescent materials are used and removal is not necessary per manufacturer's instructions. Removed insulation shall be replaced with a material having equal thermal insulation characteristics and equal fire stopping characteristics.

D. Fire stopping for filling voids in floors, in which the smallest dimension is 101 mm (4 inches) or more, shall support the same load as the floor is designed or shall be protected by a permanent barrier to prevent loading or traffic on the fire stopped area.

E. To provide a two-hour enclosure of chases where walls or floors are penetrated by plastic drain, waste, and vent pipes, encase the pipe in an 456 mm (18-inch) steel sleeve that penetrates the chase at a 45 degree downward angle. As an alternate, providing intumescent fire stopping systems listed for the plastic piping installation shall be acceptable.

F. Cable tray penetrations shall be protected by either UL-listed through penetration fire stop devices or through penetration fire stop systems that are re-enterable. Where penetrating cables in a cable tray are removed, replaced, or added, restoration shall be accomplished in an approved manner; the allowable number of penetrating items shall not be exceeded; only permitted penetrations shall be installed; and adequate clearances shall be maintained among penetrations, between penetrations, and the sides of the opening.

G. Damaged, disrupted, or removed fire stopping shall be replaced with new.

H. Firestopping shall not be applied in conjunction with fire dampers, smoke dampers, or combination fire/smoke dampers unless specifically required by the damper manufacturer installation instructions.

3.03 INSPECTION

A. Approved installation instructions shall be present at each work area prior to the beginning of work and a test installation shall be produced for quality check by the COTR and OSHEM Fire Protection Engineer. The test installation shall be subject to inspection and/or test for conformance with contract requirements. Periodic quality checks shall be performed at the discretion of the COTR, and should installation prove to be substandard, all fire stopping installed up to that time, not meeting approved standards, shall be replaced at no additional cost to the Government.

B. Area of work shall remain available for inspection by the COTR or his designated representative before and after application of fire stopping.

C. Notification: Notify the COTR or his designated representative at least 24 hours prior to installation of fire stopping in each area to allow opportunity for inspection.

D. The contractor shall submit written reports indicating locations of and types of penetrations and types of fire stopping used at each location; type shall be recorded by UL listed printed numbers. Contractor records shall be maintained on site and provided to the COTR upon arrival for inspections.

3.04 ACCEPTANCE OF WORK

A. Acceptance of Work: As work is completed, remove materials, litter, and debris. All work shall be inspected and accepted by the Contracting Officer and OSHEM Fire Protection Engineer before materials and equipment are moved to the next scheduled work area.

B. Labeling: Upon completion, affix label to or adjacent to each fire stopped penetration or joint assembly in fire-rated assemblies indicating material and proper replacement, if later disturbed. Suggested label is as follows:

ATTENTION

THIS IS A **FIRE-RATED ASSEMBLY**

BEFORE BREACHING

CONTACT BUILDING MANAGER AND PROJECT COTR

Hr Rating: _____ Installed by:

Install Date: _____ Company: _____

UL Design #:_____ Employee: _____

END OF SECTION 078413

SECTION 079200 - JOINT SEALANTS

PART 1 - GENERAL

1.1 RELATED DOCUMENTS

A. The Contract Documents in their entirety, including the Drawings, Specifications/Project Manual, Construction Contract Clauses, and any other documents issued as part of the Contract, apply to this Section.

1.2 SUMMARY

A. Section Includes:
   1. Silicone joint sealants.
   2. Urethane joint sealants.

1.3 SUBMITTALS

A. Product Data: For each joint-sealant product indicated.

B. Samples for Initial Selection: Manufacturer's color charts consisting of strips of cured sealants showing the full range of colors available for each product exposed to view.

C. Samples for Verification: For each kind and color of joint sealant required, provide Samples with joint sealants in 1/2-inch- wide joints formed between two 6-inch- long strips of material matching the appearance of exposed surfaces adjacent to joint sealants.

D. Joint-Sealant Schedule: Include the following information:
   1. Joint-sealant application, joint location, and designation.
   2. Joint-sealant manufacturer and product name.
   3. Joint-sealant formulation.
   4. Joint-sealant color.

E. Qualification Data: For qualified Installer.

F. Product Certificates: For each kind of joint sealant and accessory, from manufacturer.

G. Sealant, Waterproofing, and Restoration Institute (SWRI) Validation Certificate: For each sealant specified to be validated by SWRI's Sealant Validation Program.

H. Preconstruction Field-Adhesion Test Reports: Indicate which sealants and joint preparation methods resulted in optimum adhesion to joint substrates based on testing specified in "Preconstruction Testing" Article.

I. Field-Adhesion Test Reports: For each sealant application tested.

J. Warranties: Sample of special warranties.

1.4 QUALITY ASSURANCE

A. Installer Qualifications: Manufacturer's authorized representative who is trained and approved for installation of units required for this Project.

B. Source Limitations: Obtain each kind of joint sealant from single source from single manufacturer.

C. Mockups: Install sealant in mockups of assemblies specified in other Sections that are indicated to receive joint sealants specified in this Section. Use materials and installation methods specified in this Section.

D. Preinstallation Conference: Conduct conference at Project site.

1.5 PROJECT CONDITIONS

A. Do not proceed with installation of joint sealants under the following conditions:
   1. When ambient and substrate temperature conditions are outside limits permitted by joint-sealant manufacturer or are below 40 deg F.
   2. When joint substrates are wet.
   3. Where joint widths are less than those allowed by joint-sealant manufacturer for applications indicated.
   4. Where contaminants capable of interfering with adhesion have not yet been removed from joint substrates.

1.6 WARRANTY

A. Special Installer's Warranty: Manufacturer's standard form in which Installer agrees to repair or replace joint sealants that do not comply with performance and other requirements specified in this Section within specified warranty period.
   1. Warranty Period: Two years from date of Substantial Completion.

B. Special Manufacturer's Warranty: Manufacturer's standard form in which joint-sealant manufacturer agrees to furnish joint sealants to repair or replace those that do not comply with performance and other requirements specified in this Section within specified warranty period.
   1. Warranty Period:
      a. Silicone joint sealants: 20 years from date of Substantial Completion.
      b. Urethane joint sealants: Five years from date of Substantial Completion.

C. Special warranties specified in this article exclude deterioration or failure of joint sealants from the following:
   1. Movement of the structure caused by structural settlement or errors attributable to design or construction resulting in stresses on the sealant exceeding sealant manufacturer's written specifications for sealant elongation and compression.
   2. Disintegration of joint substrates from natural causes exceeding design specifications.
   3. Mechanical damage caused by individuals, tools, or other outside agents.
   4. Changes in sealant appearance caused by accumulation of dirt or other atmospheric contaminants.

PART 2 - PRODUCTS

2.1 MATERIALS, GENERAL

A. Compatibility: Provide joint sealants, backings, and other related materials that are compatible with one another and with joint substrates under conditions of service and application, as demonstrated by joint-sealant manufacturer, based on testing and field experience.

B. VOC Content of Interior Sealants: Provide sealants and sealant primers for use inside the weatherproofing system that comply with the following limits for VOC content when calculated according to 40 CFR 59, Part 59, Subpart D (EPA Method 24):
   1. Architectural Sealants: 250 g/L.
   2. Sealant Primers for Nonporous Substrates: 250 g/L.
   3. Sealant Primers for Porous Substrates: 775 g/L.

C. Liquid-Applied Joint Sealants: Comply with ASTM C 920 and other requirements indicated for each liquid-applied joint sealant specified, including those referencing ASTM C 920 classifications for type, grade, class, and uses related to exposure and joint substrates.

D. Stain-Test-Response Characteristics: Where sealants are specified to be nonstaining to porous substrates, provide products that have undergone testing according to ASTM C 1248 and have not stained porous joint substrates indicated for Project.

E. Colors of Exposed Joint Sealants: As selected by COTR from manufacturer's full range. Multiple sealant colors will be required.

2.2 SILICONE JOINT SEALANTS

A. Single-Component, Nonsag, Neutral-Curing Silicone Joint Sealant:
   1. ASTM C 920, Type S, Grade NS, Class 50, for Use NT.
   2. Sealant shall have a current validation certificate from the Sealant, Waterproofing and Restoration Institute (SWRI).
   3. Products: Subject to compliance with requirements, provide one of the following:
      a. Dow Corning Corporation; 791.
      b. Momentive Performance Materials, Inc.; SilPruf SCS2000.
      c. Pecora Corporation; 864.
      d. Tremco Incorporated; Spectrem 3.
      e. Smithsonian National Zoological Park approved equal.
   4. Locations: Exterior joints and interior joints in vertical surfaces and in horizontal non-traffic surfaces.

2.3 URETHANE JOINT SEALANTS

A. Multicomponent, Pourable, Urethane Joint Sealant:
   1. ASTM C 920, Type M, Grade P, Class 25, for Use T.
   2. Products: Subject to compliance with requirements, provide one of the following:
      a. BASF Building Systems; Sonolastic SL 2 Sealant
      b. Pecora Corporation; Urexpan NR-200.
      c. Tremco Incorporated; THC 900/901.
      d. Smithsonian National Zoological Park approved equal.

3. Locations: Typical exterior and interior horizontal traffic joints.

2.4 JOINT SEALANT BACKING

A. General: Provide sealant backings of material that are nonstaining; are compatible with joint substrates, sealants, primers, and other joint fillers; and are approved for applications indicated by sealant manufacturer based on field experience and laboratory testing.

B. Cylindrical Sealant Backings: ASTM C 1330, Type C (closed-cell material with a surface skin), and of size and density to control sealant depth and otherwise contribute to producing optimum sealant performance.

C. Bond-Breaker Tape: Polyethylene tape or other plastic tape recommended by sealant manufacturer for preventing sealant from adhering to rigid, inflexible joint-filler materials or joint surfaces at back of joint. Provide self-adhesive tape where applicable.

2.5 MISCELLANEOUS MATERIALS

A. Primer: Material recommended by joint-sealant manufacturer where required for adhesion of sealant to joint substrates indicated, as determined from preconstruction joint-sealant-substrate tests and field tests.

B. Cleaners for Nonporous Surfaces: Chemical cleaners acceptable to manufacturers of sealants and sealant backing materials, free of oily residues or other substances capable of staining or harming joint substrates and adjacent nonporous surfaces in any way, and formulated to promote optimum adhesion of sealants to joint substrates.

C. Masking Tape: Nonstaining, nonabsorbent material compatible with joint sealants and surfaces adjacent to joints.

PART 3 - EXECUTION

3.1 EXAMINATION

A. Examine joints indicated to receive joint sealants, with Installer present, for compliance with requirements for joint configuration, installation tolerances, and other conditions affecting joint-sealant performance.

B. Proceed with installation only after unsatisfactory conditions have been corrected.

3.2 PREPARATION

A. Surface Cleaning of Joints: Clean out joints immediately before installing joint sealants to comply with joint-sealant manufacturer's written instructions and the following requirements:
   1. Remove all foreign material from joint substrates that could interfere with adhesion of joint sealant, including dust, paints (except for permanent, protective coatings tested and approved for sealant adhesion and compatibility by sealant manufacturer), old joint sealants, oil, grease, waterproofing, water repellents, water, surface dirt, and frost.
   2. Clean porous joint substrate surfaces by brushing, grinding, mechanical abrading, or a combination of these methods to produce a clean, sound substrate capable of developing optimum bond with joint sealants. Remove loose particles remaining after cleaning

operations above by vacuuming or blowing out joints with oil-free compressed air. Porous joint substrates include the following:
   a. Concrete.
   b. Masonry.
3. Remove laitance and form-release agents from concrete.
4. Clean nonporous joint substrate surfaces with chemical cleaners or other means that do not stain, harm substrates, or leave residues capable of interfering with adhesion of joint sealants. Nonporous joint substrates include the following:
   a. Metal.
   b. Glass.

B. Joint Priming: Prime joint substrates where recommended by joint-sealant manufacturer or as indicated by preconstruction joint-sealant-substrate tests or prior experience. Apply primer to comply with joint-sealant manufacturer's written instructions. Confine primers to areas of joint-sealant bond; do not allow spillage or migration onto adjoining surfaces.

C. Masking Tape: Use masking tape where required to prevent contact of sealant or primer with adjoining surfaces that otherwise would be permanently stained or damaged by such contact or by cleaning methods required to remove sealant smears. Remove tape immediately after tooling without disturbing joint seal.

3.3 INSTALLATION OF JOINT SEALANTS

A. General: Comply with joint-sealant manufacturer's written installation instructions for products and applications indicated, unless more stringent requirements apply.

B. Sealant Installation Standard: Comply with recommendations in ASTM C 1193 for use of joint sealants as applicable to materials, applications, and conditions indicated.

C. Install sealant backings of kind indicated to support sealants during application and at position required to produce cross-sectional shapes and depths of installed sealants relative to joint widths that allow optimum sealant movement capability.
   1. Do not leave gaps between ends of sealant backings.
   2. Do not stretch, twist, puncture, or tear sealant backings.
   3. Remove absorbent sealant backings that have become wet before sealant application and replace them with dry materials.

D. Install bond-breaker tape behind sealants where sealant backings are not used between sealants and backs of joints.

E. Install sealants using proven techniques that comply with the following and at the same time backings are installed:
   1. Place sealants so they directly contact and fully wet joint substrates.
   2. Completely fill recesses in each joint configuration.
   3. Produce uniform, cross-sectional shapes and depths relative to joint widths that allow optimum sealant movement capability.

F. Tooling of Nonsag Sealants: Immediately after sealant application and before skinning or curing begins, tool sealants according to requirements specified in subparagraphs below to form

smooth, uniform beads of configuration indicated; to eliminate air pockets; and to ensure contact and adhesion of sealant with sides of joint.

1. Remove excess sealant from surfaces adjacent to joints.
2. Use tooling agents that are approved in writing by sealant manufacturer and that do not discolor sealants or adjacent surfaces.
3. Provide concave joint profile per Figure 8A in ASTM C 1193, unless otherwise indicated.
4. Provide flush joint profile where indicated per Figure 8B in ASTM C 1193.

3.4 FIELD QUALITY CONTROL

A. Field-Adhesion Testing: Field test joint-sealant adhesion to joint substrates as follows:
   1. Extent of Testing: Test completed and cured sealant joints as follows:
      a. Perform 5 tests for each kind of sealant and joint substrate.
   2. Test Method: Test joint sealants according to Method A, Field-Applied Sealant Joint Hand Pull Tab, in Appendix X1 in ASTM C 1193 or Method A, Tail Procedure, in ASTM C 1521.
      a. For joints with dissimilar substrates, verify adhesion to each substrate separately; extend cut along one side, verifying adhesion to opposite side. Repeat procedure for opposite side.
   3. Inspect tested joints and report on the following:
      a. Whether sealants filled joint cavities and are free of voids.
      b. Whether sealant dimensions and configurations comply with specified requirements.
      c. Whether sealants in joints connected to pulled-out portion failed to adhere to joint substrates or tore cohesively. Include data on pull distance used to test each kind of product and joint substrate. Compare these results to determine if adhesion passes sealant manufacturer's field-adhesion hand-pull test criteria.
   4. Record test results in a field-adhesion-test log. Include dates when sealants were installed, names of persons who installed sealants, test dates, test locations, whether joints were primed, adhesion results and percent elongations, sealant fill, sealant configuration, and sealant dimensions.
   5. Repair sealants pulled from test area by applying new sealants following same procedures used originally to seal joints. Ensure that original sealant surfaces are clean and that new sealant contacts original sealant.

B. Evaluation of Field-Adhesion Test Results: Sealants not evidencing adhesive failure from testing or noncompliance with other indicated requirements will be considered satisfactory. Remove sealants that fail to adhere to joint substrates during testing or to comply with other requirements. Retest failed applications until test results prove sealants comply with indicated requirements.

3.5 CLEANING

A. Clean off excess sealant or sealant smears adjacent to joints as the Work progresses by methods and with cleaning materials approved in writing by manufacturers of joint sealants and of products in which joints occur.

3.6 PROTECTION

A. Protect joint sealants during and after curing period from contact with contaminating substances and from damage resulting from construction operations or other causes so sealants are without deterioration or damage at time of Substantial Completion. If, despite such protection, damage or deterioration occurs, cut out and remove damaged or deteriorated joint sealants immediately so installations with repaired areas are indistinguishable from original work.

END OF SECTION 079200

SECTION 084413 - ALUMINUM-FRAMED STOREFRONTS

PART 1 - GENERAL

1.1 SUMMARY

A. Description of Work: Work of this Section includes, but is not limited to, the following:

1. Interior storefront framing.
2. Interior manual-slider entrance doors and door-frame units.
3. Aluminum sheet metal Work including aluminum trim and miscellaneous closures.
4. Glass and glazing.
5. Sealants, joint fillers and gaskets.
6. Insulation, flashing, weeps, and vents.
7. Perimeter and integral anchors, reinforcing, inserts, bearings, expansion devices, and fasteners.
8. Finishing.
9. System design and engineering.

1.2 RELATED WORK SPECIFIED ELSEWHERE

A. See Division 07 Section JOINT SEALANTS for perimeter joint fillers and sealants.

B. See Division 08 Section GLASS AND GLAZING.

1.3 PREINSTALLATION MEETINGS

A. Preinstallation Conference: Conduct conference at Project site.

1.4 ACTION SUBMITTALS

A. Combined Submittal: Submit items required in this Section as a combined submittal with requirements of Section 088000 GLASS AND GLAZING.

B. Professional Certification: Provide Shop Drawings and engineering calculations signed and sealed by a Registered Professional Engineer, licensed in Project jurisdiction.

C. Product Data: For each type of product.

1. Include construction details, material descriptions, dimensions of individual components and profiles, and finishes.

D. Shop Drawings: For aluminum-framed entrances and storefronts. Signed and sealed by a qualified professional engineer licensed to practice in the district where the work is being installed. Include plans, elevations, sections, full-size details, and attachments to other work.

1. Include details of provisions for assembly expansion and contraction and for draining moisture occurring within the assembly to the exterior.
2. Include full-size isometric details of each vertical-to-horizontal intersection of aluminum-framed entrances and storefronts, showing the following:

    a. Joinery, including concealed welds.
    b. Anchorage.
    c. Expansion provisions.
    d. Glazing.
    e. Flashing and drainage.

3. Show hardware details, methods of operation and integration with sliders, locations and mounting heights.

4. Include analysis data signed and sealed by the qualified engineer responsible for their preparation.

E. Samples:
1. Storefront components:
    a. Submit samples for finish showing full range of color, texture and finish expected in completed Work.
    b. Prepare samples on specified alloy, temper and thickness of metal required for Work.
    c. Sample sets: Minimum three samples in each set.
    d. Samples size: Minimum 300 mm (12 inch) long for extrusions and 300 mm (12 inch) square for sheet or plate.

F. Design Modifications: Submit for review any proposed variations in details or substitutions in materials required to meet specified performance requirements under full design loading.

1.5 INFORMATIONAL SUBMITTALS

A. Design Modifications: Submit for review for any proposed variations in details or substitutions in materials required to meet specified performance requirements and to coordinate Work.

B. Qualification Data: Submit installer and manufacturer qualifications verifying years of experience; include list of completed projects having similar scope of work identified by name, location, date, reference names and phone numbers.

C. Test Reports: For aluminum-framed storefronts, submit certified test reports performed by a recognized testing laboratory verifying that systems submitted for use on this Project have been previously tested and meet or exceed specified performance requirements.

D. Quality-Control Program: Developed specifically for Project, including fabrication and installation, according to recommendations in ASTM C 1401. Include periodic quality-control reports.

E. Warranties: Submit signed and dated warranties.

1.6 CLOSEOUT SUBMITTALS

A. Maintenance Data: For aluminum-framed entrances and storefronts to include in maintenance manuals.
   1. Submit instructions which describe materials, devices and procedures to be followed in cleaning and maintaining systems.
   2. Include manufacturer's brochures describing the actual materials used in Work, including metal alloys, finishes, glass, sealants, gaskets and other major components.

1.7 QUALITY ASSURANCE

A. Installer/Manufacturer Qualifications:
   1. Minimum 5 years documented, successful experience with work comparable to Work of this Project.
   2. Employ only experienced tradesmen with minimum 5 years successful experience in fabrication and installation of work.
   3. System design and engineering: Performed under direct supervision of a Registered Professional Engineer, licensed in Project jurisdiction.

B. Single Subcontract Responsibility: Retain a single firm or company to design, fabricate and install Work of this Section and related Sections so as to establish undivided responsibility for entire storefront system.

C. Regulatory Requirements: Conform to applicable requirements of authorities having jurisdiction over Project.

D. Product Options: Information on Drawings and in Specifications establishes requirements for aesthetic effects and performance characteristics of assemblies. Aesthetic effects are indicated by dimensions, arrangements, alignment, and profiles of components and assemblies as they relate to sightlines, to one another, and to adjoining construction.

   1. Do not change intended aesthetic effects, as judged solely by COTR, except with COTR's approval. If changes are proposed, submit comprehensive explanatory data to COTR for review.

E. Reference Standards: Except as may be modified by governing authorities or these Specifications, comply with applicable provisions and recommendations of the following:
   1. AAMA "Aluminum Curtain Wall Design Guide Manual".
   2. AAMA "Voluntary Specifications for Aluminum Prime Windows & Sliding Glass Door"
   3. NAAMA "Metal Finishes Manual"

1.8 MOCKUPS

A. Mockups: Build mockups to verify selections made under Sample submittals and to demonstrate aesthetic effects and set quality standards for fabrication and installation.

   1. Build mockup of typical wall area as shown on Drawings.
   2. Testing shall be performed on mockups according to requirements in "Field Quality Control" Article.

3. Approval of mockups does not constitute approval of deviations from the Contract Documents contained in mockups unless Architect specifically approves such deviations in writing.
4. Subject to compliance with requirements, approved mockups may become part of the completed Work if undisturbed at time of Substantial Completion.

1.9 DELIVERY STORAGE AND HANDLING

A. Deliver fabricated units and component parts to site identified in accordance with erection diagrams prepared by manufacturer.

B. Store in a dry ventilated space, off the ground and protect materials from soiling, rusting, and damage.

1.10 PROJECT CONDITIONS

A. Verify dimensions of supporting structure at site by accurate field measurements so that Work will be accurately designed, fabricated and fitted to structure.

1.11 SEQUENCING AND SCHEDULING

A. Coordinate storefront Work with contiguous Work and provide components at proper time and sequence to avoid delays in overall Work.

1.12 WARRANTY

A. Special Warranty: Manufacturer agrees to repair or replace components of aluminum-framed entrances and storefronts that do not comply with requirements or that fail in materials or workmanship within specified warranty period.

1. Failures include, but are not limited to, the following:

   a. Structural failures including, but not limited to, excessive deflection.
   b. Noise or vibration created by wind and thermal and structural movements.
   c. Deterioration of metals, metal finishes, and other materials beyond normal weathering.
   d. Water penetration through fixed glazing and framing areas.
   e. Failure of operating components.

2. Warranty Period: **10** years from date of Substantial Completion.

B. Special Finish Warranty: Standard form in which manufacturer agrees to repair finishes or replace aluminum that shows evidence of deterioration of factory-applied finishes within specified warranty period.

1. Deterioration includes, but is not limited to, the following:

a. Color fading more than 5 Hunter units when tested according to ASTM D 2244.
b. Chalking in excess of a No. 8 rating when tested according to ASTM D 4214.
c. Cracking, checking, peeling, or failure of paint to adhere to bare metal.

2. Warranty Period: **10** years from date of Substantial Completion.

PART 2 - PRODUCTS

2.1 PERFORMANCE REQUIREMENTS

A. Delegated Design: Engage a qualified professional engineer, as defined in Section 014000 "Quality Requirements," to design aluminum-framed storefronts.

B. General Performance: Comply with performance requirements specified, as determined by testing of glazed aluminum curtain walls representing those indicated for this Project without failure due to defective manufacture, fabrication, installation, or other defects in construction.
1. Glazed aluminum curtain walls shall withstand movements of supporting structure including, but not limited to, story drift, twist, column shortening, long-term creep, and deflection from uniformly distributed and concentrated live loads. Failure also includes the following.
   a. Thermal stresses transferring to building structure.
   b. Glass breakage.
   c. Loosening or weakening of fasteners, attachments, and other components.
   d. Failure of operating units.

C. Structural Loads:

1. General: comply with specified criteria, unless more stringent criteria is required by local authorities having jurisdiction.
2. Design loads:
   a. Design, fabricate and install component parts so that completed systems, including glass, will withstand uniform positive and negative design wind pressures in accordance with ASTM E 330, times design factor of safety.

3. Design wind pressures: Calculate in accordance with IBC 2018 and ASCE/SEI 7-2016, base calculations on wind speed of 54 m/sec (120 mph) in accordance with requirements of local authorities having jurisdiction.
   a. Exposure category: C.
4. Concentrated loads - 450kg (1000 lbs) at any point of span on metal support members.

D. Glass Statistical Factor (Safety Factor): Refer to Section 088000 GLAZING.

E. Uniform Load: A static air design load of 40 psf (1915 Pa) shall be applied in the positive and negative direction in accordance with ASTM E 330. There shall be no deflection in excess of L/175 of the span of any framing member at design load. At structural test load equal to 1.5 times the specified design load, no glass breakage or permanent set in the framing members in excess of 0.2% of their clear spans shall occur.

F. Seismic: When tested to AAMA 501.6, system must meet design displacement (elastic) of 0.010 x the story height and ultimate displacement (inelastic) of 1.5 x the design displacement.

G. Deflection of Framing Members: At design wind pressure, as follows:
   1. Limit deflection of each component part (other than glass) perpendicular to glass plane to the following values, of clear span (L) of component part, except for more stringent requirements specified herein. Measure deflection from gages located on framing members.
      a. For spans up to 4.1 m (13'-6"): L/175, with maximum of 3/4 inch (19 mm) for members supporting individual lites, whichever is less.
   2. Limit deflections of members parallel to glass plane, when carrying full dead load, to 3 mm (1/8 inch) or 25% of glass bite design dimension, whichever is less, between member and top of fixed component immediately below.
   3. Limit deflection of glass-supporting members to 1/300 of glass length for distance glass is supported.
   4. Base deflection calculations upon combination of maximum direct loadings, internal stresses and erection tolerances.
   5. When tested at 150 percent of positive and negative wind-load design pressures, systems, including anchorage, do not evidence material failures, structural distress, and permanent deformation of main framing members exceeding 0.2 percent of span.

H. Windborne-Debris Impact Resistance: Pass missile-impact and cyclic-pressure tests when tested according to ASTM E 1886 and testing information in ASTM E 1996 for Wind Zone 2.

   1. Large-Missile Test: For glazed openings located within 30 feet (9.1 m) of grade.

I. Design factor of safety:
   1. Design and fabricate structural components including members, glazing stops or gaskets, weldments, connection adhesives and sealants used as adhesives with factor of safety not less than 1.5 (i.e. failure of any structural components shall not occur at less than 1.5 times maximum "Design Wind Pressure" in accordance with ASTM E330).

J. Building movements:
   1. Design systems to withstand building movements, including thermal movements, loading deflections, shrinkage and similar movements.

K. Air Leakage and Water Penetration Performance Requirements:
   1. Design, fabricate and install systems, including joints between systems and other Work, to effectively prevent leakage of either water or air into building, both under specified test conditions and under and combination of specified performance requirements.
   2. Water penetration:
      a. Definition: Appearance of uncontrolled water, other than condensation, on indoor face of any part of wall.
      b. Design system of gutters and weeps to drain water to exterior face of wall.
         Design system so no uncontrolled water penetration occurs when water is tested in accordance with ASTM E331 with air pressure differentials of 20 percent of inward design wind pressure, but not less than 430 Pa.

L. Environmental Product Declaration (EPD): Shall have a Type III Product-Specific EPD created from a Product Category Rule

M. Material Ingredient Reporting: Shall have a complete list of chemical ingredients to at least 100ppm (0.01%) that covers 100% of the product, acceptable documentation includes:

1. Manufacturer's inventory with Chemical Abstract Service Registration Number (CASRN or CAS#).
2. Material Transparency Summary (MTS).

N. Condensation Resistance: When tested to AAMA Specification 1503, the condensation resistance factor shall not be less than 66frame and 60glass (clear)

O. Thermal-Break or Thermally-Improved System Requirements:
1. Provide system tested to demonstrate resistance to thermal conductance and condensation, and tested to show adequate strength and security of glass retention.
2. Provide aluminum components with integrally concealed low conductance and condensation, and tested to show adequate strength and security of glass retention.
3. Provide aluminum components with integrally concealed low conductance thermal barrier, located between exterior materials and window members exposed on interior, eliminating direct metal to metal contact.
4. If poured polyurethane thermal break systems are used, fabricate with mechanical interlock to prevent shrink back.

H. Thermal Movements: Allow for thermal movements resulting from ambient and surface temperature changes:

1 .Design, fabricate and install components to withstand thermal expansion and contraction forces resulting from an ambient temperature range of minus 21 degree C (-5 degree F) to 43 degree C (110 degree F) and surface temperature range of minus 15 degree C (5 degree F) to 85 degree C (185 degree F) without causing buckling, undue stress on glass, failure of joint seals, undue stress on structural elements, damaging loads on fasteners, reduction of performance or other detrimental effects.
2. Design operable doors to function normally over this temperature range.

2.2 MANUFACTURERS

A. Basis-of-Design Product: Subject to compliance with requirements, provide Kawneer North America; an Alcoa company; **2 ½" x 7 ½"** 1600 System 1 with outside glazed pressure plates, or a comparable product by one of the following:
1. Vistawall
2. Wausau.
3. Smithsonian National Zoological Park approved equal.

B. Source Limitations: Obtain all components of aluminum-framed storefront system, including framing sliding door and accessories, from single manufacturer.

2.3 FRAMING

A. Framing Members: Manufacturer's extruded- or formed-aluminum framing members of thickness required and reinforced as required to support imposed loads.

1. Construction: Thermally broken.
2. Glazing System: 4 sided capture.

3. Glazing Plane: Front.
4. Finish: Color anodic finish.
5. Fabrication Method: Field-fabricated stick system.

B. Backer Plates: Manufacturer's standard, continuous backer plates for framing members, if not integral, where framing abuts adjacent construction.

C. Brackets and Reinforcements: Manufacturer's standard high-strength aluminum with nonstaining, nonferrous shims for aligning system components.

D. Pressure Plate: Pressure plate shall be aluminum and fastened to the mullion with stainless steel screws.

E. Perimeter Anchors: When steel anchors are used, provide insulation between steel material and aluminum material to prevent galvanic action.

F. Materials:

1. Aluminum: Alloy and temper recommended by manufacturer for type of use and finish indicated.

a. Sheet and Plate: ASTM B 209 (ASTM B 209M).
b. Extruded Bars, Rods, Profiles, and Tubes: ASTM B 221 (ASTM B 221M).
c. Extruded Structural Pipe and Tubes: ASTM B 429/B 429M.
d. Structural Profiles: ASTM B 308/B 308M.

G. Glazing: See Section 088000 GLASS AND GLAZING

2.4 OPERABLE UNIT

A. Basis-of-Design Product: Subject to compliance with requirements, provide Kawneer North America; an Alcoa company; 8225TL Thermal Window with 1” thick glazing, or equal.

2.5 GLAZING

A. Glazing: Comply with Section 088000 "Glazing."

B. Glazing Gaskets: Manufacturer's standard sealed-corner pressure-glazing system of black, resilient elastomeric glazing gaskets, setting blocks, and shims or spacers.

C. Glazing Sealants: As recommended by manufacturer.

2.6 ACCESSORIES

A. Fasteners and Accessories: Manufacturer's standard corrosion-resistant, nonstaining, nonbleeding fasteners and accessories compatible with adjacent materials.

1. Use self-locking devices where fasteners are subject to loosening or turning out from thermal and structural movements, wind loads, or vibration.

2. Reinforce members as required to receive fastener threads.
3. Use exposed fasteners with countersunk Phillips screw heads, finished to match framing system.

B. Anchors: Three-way adjustable anchors with minimum adjustment of 1 inch (25.4 mm) that accommodate fabrication and installation tolerances in material and finish compatible with adjoining materials and recommended by manufacturer.

1. Concrete and Masonry Inserts: Hot-dip galvanized cast-iron, malleable-iron, or steel inserts complying with ASTM A 123/A 123M or ASTM A 153/A 153M requirements.

2. T anchors provided by Kawneer(or equal) at each mullion, top and bottom.

C. Concealed Flashing: Manufacturer's standard corrosion-resistant, nonstaining, nonbleeding flashing compatible with adjacent materials.

D. Exposed Flashing: Stainless Steel sheet ASTM A 240/A 240 M, Type 316, dead soft, fully annealed, with embossed surface.
1. Cleats:
a. Same metal and gage as flashing/sheet metal being anchored.
b. Size: 50mm (2 inches) wides, punched for two anchors.

E. Bituminous Paint: Cold-applied asphalt-mastic paint complying with SSPC-Paint 12 requirements except containing no asbestos, formulated for 30-mil (0.762-mm) thickness per coat.

2.7 FABRICATION

A. Form or extrude aluminum shapes before finishing.

B. Weld in concealed locations to greatest extent possible to minimize distortion or discoloration of finish. Remove weld spatter and welding oxides from exposed surfaces by descaling or grinding.

C. Fabricate components that, when assembled, have the following characteristics:

1. Profiles that are sharp, straight, and free of defects or deformations.
2. Accurately fitted joints with ends coped or mitered.
3. Physical and thermal isolation of glazing from framing members.
4. Accommodations for thermal and mechanical movements of glazing and framing to maintain required glazing edge clearances.
5. Fasteners, anchors, and connection devices that are concealed from view to greatest extent possible.

D. Mechanically Glazed Framing Members: Fabricate for flush glazing without projecting stops.

Storefront Framing: Fabricate components for assembly using shear-block system.

F. Entrance Door Frames: Reinforce as required to support loads imposed by door operation and for installing entrance door hardware.

G. Entrance Doors: Reinforce doors as required for installing entrance door hardware.

1. Provide sliding-type weather stripping retained in adjustable strip and mortised into door edge.

H. Entrance Door Hardware Installation: Factory install entrance door hardware to the greatest extent possible. Cut, drill, and tap for factory-installed entrance door hardware before applying finishes.

I. After fabrication, clearly mark components to identify their locations in Project according to Shop Drawings.

2.8 ALUMINUM FINISHES

A Color Anodic Finish: AAMA 611, AA-M12C22A42/A44, Class I, 0.018 mm or thicker.

1. Color: Dark bronze
2. Color: As selected by COTR from full range of industry colors and color densities.

2.9 SOURCE QUALITY CONTROL

A. Structural Sealant: Perform quality-control procedures complying with ASTM C 1401 recommendations including, but not limited to, assembly material qualification procedures, sealant testing, and assembly fabrication reviews and checks.

PART 3 - EXECUTION

3.1 EXAMINATION

A. Examine areas, with Installer present, for compliance with requirements for installation tolerances and other conditions affecting performance of the Work.

B. Proceed with installation only after unsatisfactory conditions have been corrected.

3.2 PREPARATION

A. Prepare surfaces that are in contact with structural sealant according to sealant manufacturer's written instructions to ensure compatibility and adhesion. Preparation includes, but is not limited to, cleaning and priming surfaces.

3.3 INSTALLATION

A. General:

1. Comply with manufacturer's written instructions.
2. Do not install damaged components.
3. Fit joints to produce hairline joints free of burrs and distortion.
4. Rigidly secure nonmovement joints.

5. Install anchors with separators and isolators to prevent metal corrosion and electrolytic deterioration and to prevent impeding movement of moving joints.
6. Seal perimeter and other joints watertight unless otherwise indicated.

B. Metal Protection:

1. Where aluminum is in contact with dissimilar metals, protect against galvanic action by painting contact surfaces with materials recommended by manufacturer for this purpose or by installing nonconductive spacers.
2. Where aluminum is in contact with concrete or masonry, protect against corrosion by painting contact surfaces with bituminous paint.

C. Set continuous sill members and flashing in full sealant bed as specified in Section 079200 "Joint Sealants" to produce weathertight installation.

D. Install components plumb and true in alignment with established lines and grades.

E. Install operable units level and plumb, securely anchored, and without distortion. Adjust weather-stripping contact and hardware movement to produce proper operation.

F. Install glazing as specified in Section 088000 "Glazing."

G. Install weatherseal sealant according to Section 079200 "Joint Sealants" and according to sealant manufacturer's written instructions to produce weatherproof joints. Install joint filler behind sealant as recommended by sealant manufacturer.

H. Entrance Doors: Install doors to produce smooth operation and tight fit at contact points.

1. Install to produce weathertight enclosure and tight fit at weather stripping.
2. Field-Installed Entrance Door Hardware: Install surface-mounted entrance door hardware according to entrance door hardware manufacturers' written instructions using concealed fasteners to greatest extent possible.

3.4 ERECTION TOLERANCES

A. Erection Tolerances: Install aluminum-framed entrances and storefronts to comply with the following maximum tolerances:

1. Plumb: 1/8 inch in 10 feet (3.2 mm in 3 m); 1/4 inch in 40 feet (6.35 mm in 12.2 m).
2. Level: 1/8 inch in 20 feet (3.2 mm in 6 m); 1/4 inch in 40 feet (6.35 mm in 12.2 m).
3. Alignment:

    a. Where surfaces abut in line or are separated by reveal or protruding element up to 1/2 inch (12.7 mm) wide, limit offset from true alignment to 1/16 inch (1.6 mm).
    b. Where surfaces are separated by reveal or protruding element from 1/2 to 1 inch (12.7 to 25.4 mm) wide, limit offset from true alignment to 1/8 inch (3.2 mm).
    c. Where surfaces are separated by reveal or protruding element of 1 inch (25.4 mm) wide or more, limit offset from true alignment to 1/4 inch (6 mm).

4. Location: Limit variation from plane to 1/8 inch in 12 feet (3.2 mm in 3.6 m); 1/2 inch (12.7 mm) over total length.

3.5 FIELD QUALITY CONTROL

A. Testing Agency: Engage a qualified testing agency to perform tests and inspections.

B. Field Quality-Control Testing: Perform the following test on mockups.

1. Water-Spray Test: Before installation of interior finishes has begun, areas designated by Architect shall be tested according to AAMA 501.2 and shall not evidence water penetration.

a. Perform a minimum of three tests in areas as directed by COTR.

.

D. Prepare test and inspection reports.

END OF SECTION 084413

SECTION 088000 - GLAZING

PART 1 - GENERAL

1.1 SUMMARY

A. Section includes:

1. Glass for storefront framing.
2. Glazing sealants and accessories.

B. Related Requirements:
1. See Division 08 Section ALUMINUM-FRAMED STOREFRONTS for storefront assemblies, and glazing sealants used in structural-sealant glazed storefront walls.

1.2 DEFINITIONS

A. Glass Manufacturers: Firms that produce primary glass, fabricated glass, or both, as defined in referenced glazing publications.

B. Glass Thicknesses: Indicated by thickness designations in millimeters according to ASTM C 1036.

C. IBC: International Building Code.

1.3 COORDINATION

A. Coordinate glazing channel dimensions to provide necessary bite on glass, minimum edge and face clearances, and adequate sealant thicknesses, with reasonable tolerances.

1.4 PREINSTALLATION MEETINGS

A. Preinstallation Conference: Conduct conference at Project site.

1. Review and finalize construction schedule and verify availability of materials, Installer's personnel, equipment, and facilities needed to make progress and avoid delays.
2. Review temporary protection requirements for glazing during and after installation.

1.5 ACTION SUBMITTALS

A. Combined Submittal: Submit items required in this Section as a combined submittal with requirements of Section 084413 ALUMINUM-FRAMED STOREFRONTS.

B. Product Data: Submit manufacturer's specifications and installation instructions for each type of glass required.

C. Glass Samples:
   1. For each type of the following products; 300 mm (12 inches) square.
      a. Laminated glass.
   2. Samples shall be typical production run quality and, as applicable, shall be complete with required laminating films.

D. Glazing Schedule: List glass types and thicknesses for each size opening and location. Use same designations indicated on Drawings.

E. Delegated-Design Submittal: For glass indicated to comply with performance requirements and design criteria, including analysis data signed and sealed by the qualified professional engineer responsible for their preparation.

1.6 INFORMATIONAL SUBMITTALS

A. Qualification Data: Submit installer and manufacturer qualifications verifying years of experience; include list of completed projects having similar scope of work identified by name, location, date, reference names and phone numbers.

B. Certificates:
   1. Submit certificate from glass manufacturer stating that manufacturer has reviewed glazing details including use of sealants and gaskets and each product provided is recommended for application indicated, and that materials are compatible and will adhere to specified finish.
   2. Submit certificate for glass materials at "Hazardous Locations" showing compliance with requirements of CPSC 16 CFR, Part 1201.
   3. Submit certificate stating that glass units can withstand design loads.
   4. Submit glass manufacturer's review of Shop Drawings for storefront system, with recommendations and suggestions.

1.7 CLOSEOUT SUBMITTALS

A. Maintenance Data:
   1. Submit cleaning and maintenance data for materials provided.
   2. Include copy of submittal in Project information manual.

B. Warranties: Submit signed and dated warranties.

1.8 QUALITY ASSURANCE

A. Installer Qualifications: A qualified installer who employs glass installers for this Project who are certified under the National Glass Association's Certified Glass Installer Program.

B. Glass Testing Agency Qualifications: A qualified independent testing agency accredited according to the NFRC CAP 1 Certification Agency Program.

C. Sealant Testing Agency Qualifications: An independent testing agency qualified according to ASTM C 1021 to conduct the testing indicated.

1.9 PRECONSTRUCTION TESTING

A. Preconstruction Adhesion and Compatibility Testing: Test each glass product, tape sealant, gasket, glazing accessory, and glass-framing member for adhesion to and compatibility with elastomeric glazing sealants.

1. Testing is not required if data are submitted based on previous testing of current sealant products and glazing materials matching those submitted.
2. Use ASTM C 1087 to determine whether priming and other specific joint-preparation techniques are required to obtain rapid, optimum adhesion of glazing sealants to glass, tape sealants, gaskets, and glazing channel substrates.
3. Test no fewer than eight samples of each type of material, including joint substrates, shims, sealant backings, secondary seals, and miscellaneous materials.
4. Schedule enough time for testing and analyzing results to prevent delaying the Work.
5. For materials failing tests, submit sealant manufacturer's written instructions for corrective measures including the use of specially formulated primers.

1.10 DELIVERY, STORAGE, AND HANDLING

A. Protect glazing materials according to manufacturer's written instructions. Prevent damage to glass and glazing materials from condensation, temperature changes, direct exposure to sun, or other causes.

1.11 FIELD CONDITIONS

A. Environmental Limitations: Do not proceed with glazing when ambient and substrate temperature conditions are outside limits permitted by glazing material manufacturers and when glazing channel substrates are wet from rain, frost, condensation, or other causes.

1. Do not install glazing sealants when ambient and substrate temperature conditions are outside limits permitted by sealant manufacturer or are below 40 deg F (4.4 deg C).

1.12 WARRANTY

A. Manufacturer's Special Warranty for Laminated Glass: Manufacturer agrees to replace laminated-glass units that deteriorate within specified warranty period. Deterioration of laminated glass is defined as defects developed from normal use that are not attributed to glass breakage or to maintaining and cleaning laminated glass contrary to manufacturer's written instructions. Defects include edge separation, delamination materially obstructing vision through glass, and blemishes exceeding those allowed by referenced laminated-glass standard.

1. Warranty Period: **10** years from date of Substantial Completion.

PART 2 - PRODUCTS

2.1 MANUFACTURERS

A. Basis-of-Design Product: Subject to compliance with requirements, provide product indicated on Drawings or comparable product by one of the following:

1. Saint Gobain Glass Exprover, N.A.(Global Security Glazing)
2. Smithsonian National Zoological Park approved equal.

B. Source Limitations for Glass: Obtain from single source from single manufacturer for each glass type.

C. Source Limitations for Glazing Accessories: Obtain from single source from single manufacturer for each product and installation method.

2.2 PERFORMANCE REQUIREMENTS

A. General: Installed glazing systems shall withstand normal thermal movement and wind and impact loads (where applicable) without failure, including loss or glass breakage attributable to the following: defective manufacture, fabrication, or installation; failure of sealants or gaskets to remain watertight and airtight; deterioration of glazing materials; or other defects in construction.

B. Delegated Design: Engage a qualified professional engineer, as defined in Section 014000 "Quality Requirements," to design glazing.

C. Structural Performance: Glazing shall withstand the following design loads within limits and under conditions indicated determined according to the IBC and ASTM E 1300.

1. Design Wind Pressures: Determine design wind pressures applicable to Project according to ASCE/SEI 7-2010, based on heights above grade indicated on Drawings.

   a. Wind Design Data: As indicated on Drawings.
   b. Basic Wind Speed: 120 **mph**.
   c. Importance Factor: **1.0**.
   d. Exposure Category: **C**.
2. Maximum Lateral Deflection: For glass supported on all four edges, limit center-of-glass deflection at design wind pressure to not more than 1/50 times the short-side length or 1 inch (25 mm), whichever is less.

2.3 GLASS PRODUCTS, GENERAL

A. Glazing Publications: Comply with published recommendations of glass product manufacturers and organizations below unless more stringent requirements are indicated. See these publications for glazing terms not otherwise defined in this Section or in referenced standards.

1. GANA Publications: "Laminated Glazing Reference Manual" and "Glazing Manual."

2. AAMA Publications: AAMA GDSG-1, "Glass Design for Sloped Glazing," and AAMA TIR A7, "Sloped Glazing Guidelines."
3. IGMA Publication for Sloped Glazing: IGMA TB-3001, "Guidelines for Sloped Glazing."
4. IGMA Publication for Insulating Glass: SIGMA TM-3000, "North American Glazing Guidelines for Sealed Insulating Glass Units for Commercial and Residential Use."

B. Safety Glazing Labeling: Where safety glazing is indicated, permanently mark glazing with certification label of the SGCC or another certification agency acceptable to authorities having jurisdiction. Label shall indicate manufacturer's name, type of glass, thickness, and safety glazing standard with which glass complies.

C. Thickness: Provide glass that complies with performance requirements and is not less than the thickness indicated.

D. Strength: Where annealed float glass is indicated, provide annealed float glass, heat-strengthened float glass, or fully tempered float glass as needed to comply with "Performance Requirements" Article. Where heat-strengthened float glass is indicated, provide heat-strengthened float glass or fully tempered float glass as needed to comply with "Performance Requirements" Article. Where fully tempered float glass is indicated, provide fully tempered float glass.

2.4 GLASS PRODUCTS

A. Fully Tempered Float Glass: ASTM C 1048, Kind FT (fully tempered), Condition A (uncoated) unless otherwise indicated, Type I, Class 1 (clear) as indicated, Quality-Q3,
1. Provide fully tempered glass certified by SGCC or other recognized certification agency, acceptable to authorities having jurisdiction, as complying with requirements of CPSC 16 CFR, Part 1201 for Category II materials.
2. Temper glass to increase flexural strength 4-5 times strength before treatment.
3. Treat glass in horizontal batch type reciprocating furnace, unless otherwise recommended by fabricator to fulfill performance requirements.
4. Roller wave distortions: Limit roller wave distortion to 0.003 inches peak to valley. Make roller distortion parallel to horizontal dimension of installed glass.
5. Wherever possible, locate tong marks along edge which will be concealed in the glazing system.
6. Permanently mark each unit of tempered glass with certification label acceptable to authorities having jurisdiction.
7. Locations: Provide as indicated and as required to comply with referenced standards.

B. Laminated Glazing Units (LGU): total thickness of 33mm consisting of two layers of 16mm glass with laminate layer in between.
1. Provide laminated glass complying with requirements of ASTM C 1172.
2. Provide laminated glass units certified by SGCC or other recognized certification agency, acceptable to authorities having jurisdiction, as complying with the requirements of CPSC 16 CFR, Part 1201 for Category II materials.
3. Use materials that have a proven record of no tendency to bubble, discolor, or lose physical and mechanical properties after fabrication and installation.

4. Construction: Laminate glass with polyvinyl butyral interlayer to comply with interlayer manufacturer's written instructions.
   a. Interlayer Thickness: Provide thickness not less than that indicated and as needed to comply with requirements.
   b. Interlayer Color: Clear unless otherwise indicated.
5. Fabrication:
   a. Laminate units at factory using manufacturer's standard heat-plus-pressure process.
   b. Exclude dirt and other foreign materials from lamination.
   c. Eliminate voids and delaminated surfaces from Work.
   d. Cut units to proper size at factory. Do not cut laminated glass at Project site.
   e. Cut and treat edges in accordance with glass manufacturer's recommendations.
   f. Arrange each course of laminate in order specified and label exterior (or interior) face of each completed unit.

2.5 GLAZING SEALANTS

A. General:

1. Compatibility: Compatible with one another and with other materials they contact, including glass products, seals of insulating-glass units, and glazing channel substrates, under conditions of service and application, as demonstrated by sealant manufacturer based on testing and field experience.
2. Suitability: Comply with sealant and glass manufacturers' written instructions for selecting glazing sealants suitable for applications indicated and for conditions existing at time of installation.
3. Field-applied sealants shall have a VOC content of not more than 250 g/L.
4. Sealants shall comply with the testing and product requirements of the California Department of Public Health's (formerly, the California Department of Health Services') "Standard Method for the Testing and Evaluation of Volatile Organic Chemical Emissions from Indoor Sources Using Environmental Chambers."
5. Colors of Exposed Glazing Sealants: As selected by COTR from manufacturer's full range.

B. Glazing Sealant: Neutral-curing silicone glazing sealant complying with ASTM C 920, Type S, Grade NS, Class 100/50, Use NT.

2.6 GLAZING TAPES

A. Back-Bedding Mastic Glazing Tapes: Preformed, butyl-based, 100 percent solids elastomeric tape; nonstaining and nonmigrating in contact with nonporous surfaces; with or without spacer rod as recommended in writing by tape and glass manufacturers for application indicated; and complying with ASTM C 1281 and AAMA 800 for products indicated below:

1. AAMA 804.3 tape, where indicated.
2. AAMA 806.3 tape, for glazing applications in which tape is subject to continuous pressure.
3. AAMA 807.3 tape, for glazing applications in which tape is not subject to continuous pressure.

B. Expanded Cellular Glazing Tapes: Closed-cell, PVC foam tapes; factory coated with adhesive on both surfaces; and complying with AAMA 800 for the following types:

1. AAMA 810.1, Type 1, for glazing applications in which tape acts as the primary sealant.
2. AAMA 810.1, Type 2, for glazing applications in which tape is used in combination with a full bead of liquid sealant.

2.7 MISCELLANEOUS GLAZING MATERIALS

A. General: Provide products of material, size, and shape complying with referenced glazing standard, with requirements of manufacturers of glass and other glazing materials for application indicated, and with a proven record of compatibility with surfaces contacted in installation.

B. Cleaners, Primers, and Sealers: Types recommended by sealant or gasket manufacturer.

C. Setting Blocks: Elastomeric material with a Shore, Type A durometer hardness of 85, plus or minus 5.

D. Spacers: Elastomeric blocks or continuous extrusions of hardness required by glass manufacturer to maintain glass lites in place for installation indicated.

E. Edge Blocks: Elastomeric material of hardness needed to limit glass lateral movement (side walking).

F. Cylindrical Glazing Sealant Backing: ASTM C 1330, Type O (open-cell material), of size and density to control glazing sealant depth and otherwise produce optimum glazing sealant performance.

2.8 FABRICATION OF GLAZING UNITS

A. Fabricate glazing units in sizes required to fit openings indicated for Project, with edge and face clearances, edge and surface conditions, and bite complying with written instructions of product manufacturer and referenced glazing publications, to comply with system performance requirements.

B. Clean-cut or flat-grind vertical edges of butt-glazed monolithic lites to produce square edges with slight chamfers at junctions of edges and faces.

C. Grind smooth and polish exposed glass edges and corners.

PART 3 - EXECUTION

3.1 EXAMINATION

A. Examine framing, glazing channels, and stops, with Installer present, for compliance with the following:

1. Manufacturing and installation tolerances, including those for size, squareness, and offsets at corners.
2. Presence and functioning of weep systems.
3. Minimum required face and edge clearances.
4. Effective sealing between joints of glass-framing members.

B. Proceed with installation only after unsatisfactory conditions have been corrected.

3.2 PREPARATION

A. Clean glazing channels and other framing members receiving glass immediately before glazing. Remove coatings not firmly bonded to substrates.

B. Examine glazing units to locate exterior and interior surfaces. Label or mark units as needed so that exterior and interior surfaces are readily identifiable. Do not use materials that leave visible marks in the completed Work.

3.3 GLAZING, GENERAL

A. Comply with combined written instructions of manufacturers of glass, sealants, gaskets, and other glazing materials, unless more stringent requirements are indicated, including those in referenced glazing publications.

B. Protect glass edges from damage during handling and installation. Remove damaged glass from Project site and legally dispose of off Project site. Damaged glass includes glass with edge damage or other imperfections that, when installed, could weaken glass, impair performance, or impair appearance.

C. Apply primers to joint surfaces where required for adhesion of sealants, as determined by preconstruction testing.

D. Install setting blocks in sill rabbets, sized and located to comply with referenced glazing publications, unless otherwise required by glass manufacturer. Set blocks in thin course of compatible sealant suitable for heel bead.

E. Do not exceed edge pressures stipulated by glass manufacturers for installing glass lites.

F. Provide spacers for glass lites where length plus width is larger than 50 inches (1270 mm).

1. Locate spacers directly opposite each other on both inside and outside faces of glass. Install correct size and spacing to preserve required face clearances, unless gaskets and glazing tapes are used that have demonstrated ability to maintain required face clearances and to comply with system performance requirements.
2. Provide 1/8-inch (3-mm) minimum bite of spacers on glass and use thickness equal to sealant width. With glazing tape, use thickness slightly less than final compressed thickness of tape.

G. Provide edge blocking where indicated or needed to prevent glass lites from moving sideways in glazing channel, as recommended in writing by glass manufacturer and according to requirements in referenced glazing publications.

H. Set glass lites in each series with uniform pattern, draw, bow, and similar characteristics.

I. Set glass lites with proper orientation so that coatings face exterior or interior as specified.

J. Where wedge-shaped gaskets are driven into one side of channel to pressurize sealant or gasket on opposite side, provide adequate anchorage so gasket cannot walk out when installation is subjected to movement.

K. Square cut wedge-shaped gaskets at corners and install gaskets in a manner recommended by gasket manufacturer to prevent corners from pulling away; seal corner joints and butt joints with sealant recommended by gasket manufacturer.

3.4 TAPE GLAZING

A. Position tapes on fixed stops so that, when compressed by glass, their exposed edges are flush with or protrude slightly above sightline of stops.

B. Install tapes continuously, but not necessarily in one continuous length. Do not stretch tapes to make them fit opening.

C. Cover vertical framing joints by applying tapes to heads and sills first, then to jambs. Cover horizontal framing joints by applying tapes to jambs, then to heads and sills.

D. Place joints in tapes at corners of opening with adjoining lengths butted together, not lapped. Seal joints in tapes with compatible sealant approved by tape manufacturer.

E. Do not remove release paper from tape until right before each glazing unit is installed.

F. Apply heel bead of elastomeric sealant.

G. Center glass lites in openings on setting blocks, and press firmly against tape by inserting dense compression gaskets formed and installed to lock in place against faces of removable stops. Start gasket applications at corners and work toward centers of openings.

H. Apply cap bead of elastomeric sealant over exposed edge of tape.

3.5 GASKET GLAZING (DRY)

A. Cut compression gaskets to lengths recommended by gasket manufacturer to fit openings exactly, with allowance for stretch during installation.

B. Insert soft compression gasket between glass and frame or fixed stop so it is securely in place with joints miter cut and bonded together at corners.

C. Installation with Drive-in Wedge Gaskets: Center glass lites in openings on setting blocks, and press firmly against soft compression gasket by inserting dense compression gaskets formed and installed to lock in place against faces of removable stops. Start gasket applications at corners and work toward centers of openings. Compress gaskets to produce a weathertight seal without developing bending stresses in glass. Seal gasket joints with sealant recommended by gasket manufacturer.

D. Installation with Pressure-Glazing Stops: Center glass lites in openings on setting blocks, and press firmly against soft compression gasket. Install dense compression gaskets and pressure-glazing stops, applying pressure uniformly to compression gaskets. Compress gaskets to produce a weathertight seal without developing bending stresses in glass. Seal gasket joints with sealant recommended by gasket manufacturer.

E. Install gaskets so they protrude past face of glazing stops.

3.6 SEALANT GLAZING (WET)

A. Install continuous spacers, or spacers combined with cylindrical sealant backing, between glass lites and glazing stops to maintain glass face clearances and to prevent sealant from extruding into glass channel and blocking weep systems until sealants cure. Secure spacers or spacers and backings in place and in position to control depth of installed sealant relative to edge clearance for optimum sealant performance.

B. Force sealants into glazing channels to eliminate voids and to ensure complete wetting or bond of sealant to glass and channel surfaces.

C. Tool exposed surfaces of sealants to provide a substantial wash away from glass.

3.7 CLEANING AND PROTECTION

A. Immediately after installation remove nonpermanent labels and clean surfaces.

B. Protect glass from contact with contaminating substances resulting from construction operations. Examine glass surfaces adjacent to or below exterior concrete and other masonry surfaces at frequent intervals during construction, but not less than once a month, for buildup of dirt, scum, alkaline deposits, or stains.

1. If, despite such protection, contaminating substances do come into contact with glass, remove substances immediately as recommended in writing by glass manufacturer. Remove and replace glass that cannot be cleaned without damage to coatings.

C. Remove and replace glass that is damaged during construction period.

D. Wash glass on both exposed surfaces not more than four days before date scheduled for inspections that establish date of Substantial Completion. Wash glass as recommended in writing by glass manufacturer.

3.8 LAMINATED-GLASS SCHEDULE

A. Glass Type LG-1: Clear laminated glass with two plies of ultraclear fully tempered float glass.
   1. Overall Unit Thickness: 33 mm (1 5/16 inch)
   2. Thickness of each glass ply: 16mm (5/8 inch)
   3. Interlayer thickness: 1.52mm (0.060 inch) or as required to meet performance requirements.
   4. Provide safety glazing label.
   5. Location: At exhibit storefront assemblies.

B. Glass Type LG-2: Clear laminated glass with two plies of ultraclear fully tempered float glass.
   1. Overall Unit Thickness: 25.5mm (1 inch)
   2. Thickness of each glass ply: 12mm (1/2 inch)
   3. Interlayer thickness: 1.52mm (0.060 inch) or as required to meet performance requirements.
   4. Heat soaked.
   5. Provide safety glazing label.
   6. Location: At Exhibit 1, training wall window

C. Glass Type LG-3: Opaque laminated glass with two plies of ultraclear fully tempered float glass and opaque PVB interlayer, color to be selected by COTR.
   1. Overall Unit Thickness: 33 mm (1 5/16 inch)
   2. Thickness of each glass ply: 16mm (5/8 inch)
   3. Interlayer thickness: 1.52mm (0.060 inch) or as required to meet performance requirements.
   4. Provide safety glazing label.
   5. Location: At Exhibit 1 storefront assemblies, shared with Research.

END OF SECTION 088000

SECTION 089116 - OPERABLE WALL LOUVERS

PART 1 - GENERAL

1.1 RELATED DOCUMENTS

A. Drawings and general provisions of the Contract, including General and Supplementary Conditions and Division 01 Specification Sections, apply to this Section.

1.2 SUMMARY

A. Section Includes:

1. Operable, extruded-aluminum louvers.

B. Related Requirements:

1. Division 5 for metal mesh animal barrier.

2. Division 23 for louvers that are a part of mechanical equipment.

1.3 DEFINITIONS

A. Louver Terminology: Definitions of terms for metal louvers contained in AMCA 501 apply to this Section unless otherwise defined in this Section or in referenced standards.

B. Horizontal Louver: Louver with horizontal blades (i.e., the axes of the blades are horizontal).

C. Drainable-Blade Louver: Louver with blades having gutters that collect water and drain it to channels in jambs and mullions, which carry it to bottom of unit and away from opening.

1.4 ACTION SUBMITTALS

A. Product Data: For each type of product indicated.

1. For louvers specified to bear AMCA seal, include printed catalog pages showing specified models with appropriate AMCA Certified Ratings Seals.

B. Shop Drawings: For louvers and accessories. Include plans, elevations, sections, details, and attachments to other work. Show frame profiles and blade profiles, angles, and spacing.

1. Show weep paths, gaskets, flashing, sealant, and other means of preventing water intrusion.
2. Show mullion profiles and locations.
3. Wiring Diagrams: For power, signal, and control wiring for motorized operable louvers.

C. Samples: For each type of metal finish required.

1.5 INFORMATIONAL SUBMITTALS

A. Product Test Reports: Based on evaluation of comprehensive tests performed according to AMCA 500-L by a qualified testing agency or by manufacturer and witnessed by a qualified testing agency, for each type of louver and showing compliance with performance requirements specified.

B. Windborne-debris-impact-resistance test reports.

1.6 QUALITY ASSURANCE

A. Welding Qualifications: Qualify procedures and personnel according to the following:

1. AWS D1.2/D1.2M, "Structural Welding Code - Aluminum."
2. AWS D1.3/D1.3M, "Structural Welding Code - Sheet Steel."
3. AWS D1.6/D1.6M, "Structural Welding Code - Stainless Steel."

1.7 FIELD CONDITIONS

A. Field Measurements: Verify actual dimensions of openings by field measurements before fabrication.

PART 2 - PRODUCTS

2.1 MANUFACTURERS

A. Source Limitations: Obtain louvers (fixed and operable) from single source from single manufacturer.

2.2 PERFORMANCE REQUIREMENTS

A. Structural Performance: Louvers shall withstand the effects of gravity loads and the following loads and stresses within limits and under conditions indicated without permanent deformation of louver components, noise or metal fatigue caused by louver-blade rattle or flutter, or permanent damage to fasteners and anchors. Wind pressures shall be considered to act normal to the face of the building.
   1. Wind Loads: Determine loads based on a uniform pressure of 20 lbf/sq. ft., acting inward or outward.

B. Windborne-Debris-Impact Resistance: Louvers located within 30 feet of grade shall pass basic-protection, large-missile testing requirements in ASTM E 1996 for Wind Zone 1 when tested according to ASTM E 1886. Test specimens shall be no smaller in width and length than louvers indicated for use on the Project.

C. Seismic Performance: Louvers, including attachments to other construction, shall withstand the effects of earthquake motions determined according to ASCE/SEI 7.

1. Design earthquake spectral response acceleration, short period (Sds) for Project:As indicated on drawings.
2. Component Importance Factor: As indicated on drawings.

D. Louver Performance Ratings: Provide louvers complying with requirements specified, as demonstrated by testing manufacturer's stock units identical to those provided, except for length and width according to AMCA 500-L.

E. Thermal Movements: Allow for thermal movements from ambient and surface temperature changes.

1. Temperature Change (Range): 120 deg F, ambient; 180 deg F, material surfaces.

F. SMACNA Standard: Comply with recommendations in SMACNA's "Architectural Sheet Metal Manual" for fabrication, construction details, and installation procedures.

G. UL and NEMA Compliance: Provide motors and related components for motor-operated louvers that are listed and labeled by UL and comply with applicable NEMA standards.

2.3 OPERABLE, EXTRUDED-ALUMINUM LOUVERS

A. Louver Construction and Operation: Provide operable louvers with extruded-aluminum frames and blades not less than 0.080-inch nominal thickness, and with operating mechanisms to suit louver sizes.

1. Motor operated with actuator per Division 23 - 23 0900.

B. Dual-Blade, Operable Louver - L-2: Fixed drainable blades and operable plain blades combined in single frame.

1. Manufacturers: Subject to compliance with requirements, provide products by the following:
2. Basis-of-Design Product: Subject to compliance with requirements, provide RUSKIN ELC445D Drainable Combination Louver or comparable product by one of the following:

a. Air Flow Company, Inc.
b. American Warming and Ventilating; a Mestek company.
c. Cesco Products; a division of Mestek, Inc.
d. Greenheck Fan Corporation.
e. Industrial Louvers, Inc.
f. Pottorff.
g. Ruskin Company; Tomkins PLC.
h. United Enertech.

3. Louver Depth: 4 inched.

4. Frame and Blade Nominal Thickness: Not less than 0.060" inch for fixed blades, 0.125" inch for adjustable blades and 0.8" for frames.
5. Mullion Type: Exposed.
6. Louver Performance Ratings:

    a. Free Area: Not less than 6.0 sq. ft. for 48-inch- wide by 48-inch- high louver.
    b. Point of Beginning Water Penetration: Not less than 974 fpm.
    c. Air Performance: To meet BOD product.
    d. Air Leakage: To meet BOD product.

7. AMCA Seal: Mark units with AMCA Certified Ratings Seal.

2.4 MATERIALS

A. Aluminum Extrusions: ASTM B 221, Alloy 6063-T5, T-52, or T6.

B. Aluminum Sheet: ASTM B 209, Alloy 3003 or 5005 with temper as required for forming, or as otherwise recommended by metal producer for required finish.

C. Fasteners: Use types and sizes to suit unit installation conditions.

1. Use Phillips flat-head screws for exposed fasteners unless otherwise indicated.
2. For fastening aluminum, use aluminum or 300 series stainless-steel fasteners.
3. For fastening galvanized steel, use hot-dip-galvanized steel or 300 series stainless-steel fasteners.
4. For fastening stainless steel, use 300 series stainless-steel fasteners.
5. For color-finished louvers, use fasteners with heads that match color of louvers.

D. Post-installed Fasteners for Concrete and Masonry: Torque-controlled expansion anchors, made from stainless-steel components, with capability to sustain, without failure, a load equal to 4 times the loads imposed for concrete, or 6 times the load imposed for masonry, as determined by testing according to ASTM E 488, conducted by a qualified independent testing agency.

E. Bituminous Paint: Cold-applied asphalt emulsion complying with ASTM D 1187.

2.5 FABRICATION

A. Factory assemble louvers to minimize field splicing and assembly. Disassemble units as necessary for shipping and handling limitations. Clearly mark units for reassembly and coordinated installation.

B. Vertical Assemblies: Where height of louver units exceeds fabrication and handling limitations, fabricate units to permit field-bolted assembly with close-fitting joints in jambs and mullions, reinforced with splice plates.

1. Continuous Vertical Assemblies: Fabricate units without interrupting blade-spacing pattern .

C. Fabricate frames, including integral sills, to fit in openings of sizes indicated, with allowances made for fabrication and installation tolerances, adjoining material tolerances, and perimeter sealant joints.

1. Frame Type: Channel unless otherwise indicated.

D. Include supports, anchorages, and accessories required for complete assembly.

E. Provide vertical mullions of type and at spacings indicated, but not more than is recommended by manufacturer, or 72 inches o.c., whichever is less.

F. Provide subsills made of same material as louvers for recessed louvers.

G. Join frame members to each other and to fixed louver blades with fillet welds concealed from view unless otherwise indicated or size of louver assembly makes bolted connections between frame members necessary.

2.6 ALUMINUM FINISHES

A. Finish louvers after assembly.

B. Color Anodic Finish: AAMA 611 or thicker.

1. Color: As selected by Architect from full range of industry colors and color densities.

PART 3 - EXECUTION

3.1 EXAMINATION

A. Examine substrates and openings, with Installer present, for compliance with requirements for installation tolerances and other conditions affecting performance of the Work.

B. Proceed with installation only after unsatisfactory conditions have been corrected.

3.2 PREPARATION

A. Coordinate setting drawings, diagrams, templates, instructions, and directions for installation of anchorages that are to be embedded in concrete or masonry construction. Coordinate delivery of such items to Project site.

3.3 INSTALLATION

A. Locate and place louvers level, plumb, and at indicated alignment with adjacent work.

B. Use concealed anchorages where possible. Provide brass or lead washers fitted to screws where required to protect metal surfaces and to make a weathertight connection.

C. Form closely fitted joints with exposed connections accurately located and secured.

D. Provide perimeter reveals and openings of uniform width for sealants and joint fillers, as indicated.

E. Protect unpainted galvanized and nonferrous-metal surfaces that are in contact with concrete, masonry, or dissimilar metals from corrosion and galvanic action by applying a heavy coating of bituminous paint or by separating surfaces with waterproof gaskets or nonmetallic flashing.

F. Install concealed gaskets, flashings, joint fillers, and insulation as louver installation progresses, where weathertight louver joints are required. Comply with Section 079200 "Joint Sealants" for sealants applied during louver installation.

3.4 ADJUSTING AND CLEANING

A. Test operable louvers and adjust as needed to produce fully functioning units that comply with requirements.

B. Clean exposed louver surfaces that are not protected by temporary covering, to remove fingerprints and soil during construction period. Do not let soil accumulate during construction period.

C. Before final inspection, clean exposed surfaces with water and a mild soap or detergent not harmful to finishes. Thoroughly rinse surfaces and dry.

D. Restore louvers damaged during installation and construction so no evidence remains of corrective work. If results of restoration are unsuccessful, as determined by Architect, remove damaged units and replace with new units.

1. Touch up minor abrasions in finishes with air-dried coating that matches color and gloss of, and is compatible with, factory-applied finish coating.

END OF SECTION 089116

SECTION 089119 - FIXED LOUVERS

PART 1 - GENERAL

1.1 RELATED DOCUMENTS

A. Drawings and general provisions of the Contract, including General and Supplementary Conditions and Division 01 Specification Sections, apply to this Section.

1.2 SUMMARY

A. Section Includes:

1. Fixed, extruded-aluminum louvers.

B. Related Requirements:

1. Division 5 for metal mesh animal barrier.
2. Division 23 for louvers that are a part of mechanical equipment.

1.3 DEFINITIONS

A. Louver Terminology: Definitions of terms for metal louvers contained in AMCA 501 apply to this Section unless otherwise defined in this Section or in referenced standards.

B. Vertical Louver: Louver with vertical blades (i.e., the axes of the blades are vertical).

C. Drainable-Blade Louver: Louver with blades having gutters that collect water and drain it to channels in jambs and mullions, which carry it to bottom of unit and away from opening.

1.4 ACTION SUBMITTALS

A. Product Data: For each type of product.

1. For louvers specified to bear AMCA seal, include printed catalog pages showing specified models with appropriate AMCA Certified Ratings Seals.

B. Shop Drawings: For louvers and accessories. Include plans, elevations, sections, details, and attachments to other work. Show frame profiles and blade profiles, angles, and spacing.

1. Show weep paths, gaskets, flashing, sealant, and other means of preventing water intrusion.
2. Show mullion profiles and locations.

C. Samples: For each type of metal finish required.

1.5 INFORMATIONAL SUBMITTALS

A. Product Test Reports: Based on evaluation of comprehensive tests performed according to AMCA 500-L by a qualified testing agency or by manufacturer and witnessed by a qualified testing agency, for each type of louver and showing compliance with performance requirements specified.

B. Windborne-debris-impact-resistance test reports.

1.6 QUALITY ASSURANCE

A. Welding Qualifications: Qualify procedures and personnel according to the following:

1. AWS D1.2/D1.2M, "Structural Welding Code - Aluminum."
2. AWS D1.3/D1.3M, "Structural Welding Code - Sheet Steel."
3. AWS D1.6/D1.6M, "Structural Welding Code - Stainless Steel."

1.7 FIELD CONDITIONS

A. Field Measurements: Verify actual dimensions of openings by field measurements before fabrication.

PART 2 - PRODUCTS

2.1 MANUFACTURERS

A. Source Limitations: Obtain louvers (fixed and operable) from single source from a single manufacturer.

2.2 PERFORMANCE REQUIREMENTS

A. Structural Performance: Louvers shall withstand the effects of gravity loads and the following loads and stresses within limits and under conditions indicated without permanent deformation of louver components, noise or metal fatigue caused by louver-blade rattle or flutter, or permanent damage to fasteners and anchors. Wind pressures shall be considered to act normal to the face of the building.
   1. Wind Loads: Determine loads based on a uniform pressure of 20 lbf/sq. ft., acting inward or outward.

B. Windborne-Debris-Impact Resistance: Louvers located within 30 feet of grade shall pass basic-protection, large-missile testing requirements in ASTM E 1996 for Wind Zone 1 when tested according to ASTM E 1886. Test specimens shall be no smaller in width and length than louvers indicated for use on Project.

C. Seismic Performance: Louvers, including attachments to other construction, shall withstand the effects of earthquake motions determined according to ASCE/SEI 7.

1. Design earthquake spectral response acceleration, short period (Sds) for Project:As indicated on drawings.
2. Component Importance Factor: As indicated on drawings.

D. Louver Performance Ratings: Provide louvers complying with requirements specified, as demonstrated by testing manufacturer's stock units identical to those provided, except for length and width according to AMCA 500-L.

E. Thermal Movements: Allow for thermal movements from ambient and surface temperature changes.

1. Temperature Change (Range): 120 deg F, ambient; 180 deg F, material surfaces.

F. SMACNA Standard: Comply with recommendations in SMACNA's "Architectural Sheet Metal Manual" for fabrication, construction details, and installation procedures.

2.3 FIXED, EXTRUDED-ALUMINUM LOUVERS

A. Horizontal, Drainable-Blade Louver Type A

1. Manufacturers: Subject to compliance with requirements, provide products by the following:
2. Basis-of-Design Product: Subject to compliance with requirements, provide **Ruskin, ELF211 Thin Line Stationary Louver** or comparable product by one of the following:

a. Basis of Design : Ruskin Company; Tomkins PLC.
b. Air Balance Inc.; a Mestek company.
c. Air Flow Company, Inc.
d. Airolite Company, LLC (The).
e. All-Lite Architectural Products.
f. American Warming and Ventilating; a Mestek company.
g. Architectural Louvers; Harray, LLC.
h. Arrow United Industries; a division of Mestek, Inc.
i. Carnes Company, Inc.
j. Cesco Products; a division of Mestek, Inc.
k. Construction Specialties, Inc.
l. Dowco Products Group; Safe Air of Illinois.
m. Greenheck Fan Corporation.
n. Industrial Louvers, Inc.
o. Louvers & Dampers; a division of Mestek, Inc.
p. Metal Form Manufacturing, Inc.
q. NCA Manufacturing, Inc.
r. Nystrom, Inc.
s. Pottorff.
t. Reliable Products, Inc.
u. United Enertech.

v. Vent Products Co., Inc.
w. Or approved equal.

3. Louver Depth: 2 inches.
4. Color : match others adjacent.
5. Frame and Blade Nominal Thickness: Not less than 0.060 inch for blades and frames.
6. Mullion Type: Exposed.
7. Louver Performance Ratings:

   a. Free Area: Minimum 42%.

8. AMCA Seal: Mark units with AMCA Certified Ratings Seal.

B. Horizontal, Drainable-Blade Louver Type B

1. Manufacturers: Subject to compliance with requirements, provide products by the following:
2. Basis-of-Design Product: Subject to compliance with requirements, provide **Ruskin, ELF375DXH Drainable Stationary Louver** or comparable product by one of the following:
   a. Architectural Louvers; Harray, LLC.
   b. Cesco Products; a division of Mestek, Inc.
   c. Louvers & Dampers; a division of Mestek, Inc.
   d. Or approved equal.

3. Louver Depth: 4 inches.

4. Color : match others adjacent.
5. Frame and Blade Nominal Thickness: Not less than 0.125 inch for blades and frames.
6. Mullion Type: Exposed.
7. Louver Performance Ratings:

   a. Free Area: Minimum 54%.

8. AMCA Seal: Mark units with AMCA Certified Ratings Seal.

2.4 LOUVER SCREENS

A. General: Provide screen at each exterior louver.

1. Screen Location for Fixed Louvers: Interior face.
2. Screening Type: Insect screening.

B. Secure screen frames to louver frames with stainless-steel machine screws, spaced a maximum of 6 inches from each corner and at 12 inches o.c.

C. Louver Screen Frames: Fabricate with mitered corners to louver sizes indicated.

1. Metal: Same type and form of metal as indicated for louver to which screens are attached. Reinforce extruded-aluminum screen frames at corners with clips.
2. Finish: Same finish as louver frames to which louver screens are attached.

3. Type: Rewirable frames with a driven spline or insert.

D. Louver Screening for Aluminum Louvers:
1. Insect Screening: Aluminum, 18-by-16 mesh, 0.012-inch wire.

2.5 MATERIALS

A. Aluminum Extrusions: ASTM B 221, Alloy 6063-T5, T-52, or T6.

B. Aluminum Sheet: ASTM B 209, Alloy 3003 or 5005 with temper as required for forming, or as otherwise recommended by metal producer for required finish.

C. Fasteners: Use types and sizes to suit unit installation conditions.

1. Use Phillips flat-head screws for exposed fasteners unless otherwise indicated.
2. For fastening aluminum, use aluminum or 300 series stainless-steel fasteners.
3. For fastening galvanized steel, use hot-dip-galvanized steel or 300 series stainless-steel fasteners.
4. For fastening stainless steel, use 300 series stainless-steel fasteners.
5. For color-finished louvers, use fasteners with heads that match color of louvers.

D. Postinstalled Fasteners for Concrete and Masonry: Torque-controlled expansion anchors, made from stainless-steel components, with capability to sustain, without failure, a load equal to 4 times the loads imposed, for concrete, or 6 times the load imposed for masonry, as determined by testing according to ASTM E 488, conducted by a qualified independent testing agency.

E. Bituminous Paint: Cold-applied asphalt emulsion complying with ASTM D 1187.

2.6 FABRICATION

A. Factory assemble louvers to minimize field splicing and assembly. Disassemble units as necessary for shipping and handling limitations. Clearly mark units for reassembly and coordinated installation.

B. Vertical Assemblies: Where height of louver units exceeds fabrication and handling limitations, fabricate units to permit field-bolted assembly with close-fitting joints in jambs and mullions, reinforced with splice plates.

1. Continuous Vertical Assemblies: Fabricate units without interrupting blade-spacing pattern.

C. Maintain equal louver blade spacing, including separation between blades and frames at head and sill, to produce uniform appearance. Notify architect if not possible.

D. Fabricate frames, including integral sills, to fit in openings of sizes indicated, with allowances made for fabrication and installation tolerances, adjoining material tolerances, and perimeter sealant joints.

1. Frame Type: Interior flange.

E. Include supports, anchorages, and accessories required for complete assembly.

F. Provide vertical mullions of type and at spacings indicated, but not more than is recommended by manufacturer, or 72 inches o.c., whichever is less.

G. Join frame members to each other and to fixed louver blades with fillet welds concealed from view unless otherwise indicated or size of louver assembly makes bolted connections between frame members necessary.

2.7 ALUMINUM FINISHES

A. Finish louvers after assembly.

B. Color Anodic Finish: AAMA 611, [AA-M12C22A32/A34, Class II, 0.010 mm] or thicker.
   1. Color: As selected by Architect from full range of industry colors and color densities.

PART 3 - EXECUTION

3.1 EXAMINATION

A. Examine substrates and openings, with Installer present, for compliance with requirements for installation tolerances and other conditions affecting performance of the Work.

B. Proceed with installation only after unsatisfactory conditions have been corrected.

3.2 PREPARATION

A. Coordinate setting drawings, diagrams, templates, instructions, and directions for installation of anchorages that are to be embedded in concrete or masonry construction. Coordinate delivery of such items to Project site.

3.3 INSTALLATION

A. Locate and place louvers level, plumb, and at indicated alignment with adjacent work.

B. Use concealed anchorages where possible. Provide brass or lead washers fitted to screws where required to protect metal surfaces and to make a weathertight connection.

C. Form closely fitted joints with exposed connections accurately located and secured.

D. Provide perimeter reveals and openings of uniform width for sealants and joint fillers, as indicated.

E. Protect unpainted galvanized and nonferrous-metal surfaces that are in contact with concrete, masonry, or dissimilar metals from corrosion and galvanic action by applying a heavy coating of bituminous paint or by separating surfaces with waterproof gaskets or nonmetallic flashing.

F. Install concealed gaskets, flashings, joint fillers, and insulation as louver installation progresses, where weathertight louver joints are required. Comply with Section 079200 "Joint Sealants" for sealants applied during louver installation.

3.4 ADJUSTING AND CLEANING

A. Clean exposed louver surfaces that are not protected by temporary covering, to remove fingerprints and soil during construction period. Do not let soil accumulate during construction period.

B. Before final inspection, clean exposed surfaces with water and a mild soap or detergent not harmful to finishes. Thoroughly rinse surfaces and dry.

C. Restore louvers damaged during installation and construction so no evidence remains of corrective work. If results of restoration are unsuccessful, as determined by Architect, remove damaged units and replace with new units.

1. Touch up minor abrasions in finishes with air-dried coating that matches color and gloss of, and is compatible with, factory-applied finish coating.

END OF SECTION 089119

SECTION 09 2216 - NON-STRUCTURAL METAL FRAMING

PART 1 - GENERAL

1.1 RELATED DOCUMENTS

A. The Contract Documents in their entirety, including the Drawings, Specifications, Construction Contract Clauses, and any other documents issued as part of the Contract, apply to this Section.

1.2 SUMMARY

A. Section Includes:
   1. Non-load-bearing steel framing systems for interior gypsum board assemblies.
   2. Suspension systems for interior ceilings, soffits, and grid systems.

1.3 ACTION SUBMITTALS

A. Product Data: For each type of product including installation instructions.

PART 2 - PRODUCTS

2.1 PERFORMANCE REQUIREMENTS

A. Fire-Test-Response Characteristics: For fire-resistance-rated assemblies that incorporate non-load-bearing steel framing, provide materials and construction identical to those tested in assembly indicated, according to ASTM E 119 by an independent testing agency.

2.2 FRAMING SYSTEMS

A. Recycled Content of Steel Products: Postconsumer recycled content plus one-half of preconsumer recycled content not less than 25 percent.

B. Framing Members, General: Comply with ASTM C 754 for conditions indicated.
   1. Steel Sheet Components: Comply with ASTM C 645 requirements for metal unless otherwise indicated.
   2. Protective Coating: ASTM A 653/A 653M, G60, hot-dip galvanized unless otherwise indicated.

C. Studs and Runners: ASTM C 645.
   1. Steel Studs and Runners:
      a. Minimum Base-Metal Thickness: 0.018 inch, except as otherwise indicated.
      b. Depth: 3-5/8" , 6" or as indicated on Drawings.

D. Slip-Type Head Joints: Where indicated, provide the following:

1. Single Long-Leg Runner System: ASTM C 645 top runner with 2-inch- deep flanges in thickness not less than indicated for studs, installed with studs friction fit into top runner and with continuous bridging located within 12 inches of the top of studs to provide lateral bracing.
2. Double-Runner System: ASTM C 645 top runners, inside runner with 2-inch- deep flanges in thickness not less than indicated for studs and fastened to studs, and outer runner sized to friction fit inside runner.
3. Deflection Track: Steel sheet top runner manufactured to prevent cracking of finishes applied to interior partition framing resulting from deflection of structure above; in thickness not less than indicated for studs and in width to accommodate depth of studs.
   a. Products: Subject to compliance with requirements, available products that may be incorporated into the Work include, but are not limited to, the following:
      1) Dietrich Metal Framing; SLP-TRK Slotted Deflection Track.
      2) MBA Building Supplies; FlatSteel Deflection Track or Slotted Deflecto Track.
      3) Steel Network Inc. (The); VertiClip SLD or VertiTrack VTD Series.
      4) Superior Metal Trim; Superior Flex Track System (SFT).

E. Flat Strap and Backing Plate: Steel sheet for blocking and bracing in length and width indicated.
   1. Minimum Base-Metal Thickness: As indicated on Drawings.

F. Hat-Shaped, Rigid Furring Channels: ASTM C 645.
   1. Minimum Base-Metal Thickness: 0.033 inch.
   2. Depth: As indicated on Drawings.

2.3 SUSPENSION SYSTEMS

A. Tie Wire: ASTM A 641/A 641M, Class 1 zinc coating, soft temper, 0.062-inch- diameter wire, or double strand of 0.048-inch- diameter wire.

B. Hanger Attachments to Concrete:
   1. Anchors: Fabricated from corrosion-resistant materials with holes or loops for attaching wire hangers and capable of sustaining, without failure, a load equal to 5 times that imposed by construction as determined by testing according to ASTM E 488 by an independent testing agency.
      a. Type: Postinstalled, expansion anchor.
   2. Powder-Actuated Fasteners: Suitable for application indicated, fabricated from corrosion-resistant materials with clips or other devices for attaching hangers of type indicated, and capable of sustaining, without failure, a load equal to 10 times that imposed by construction as determined by testing according to ASTM E 1190 by an independent testing agency.

C. Wire Hangers: ASTM A 641/A 641M, Class 1 zinc coating, soft temper, 0.16 inch in diameter.

D. Flat Hangers: Steel sheet, 1 by 3/16 inch by length indicated.

E. Carrying Channels: Cold-rolled, commercial-steel sheet with a base-metal thickness of 0.053 inch and minimum 1/2-inch- wide flanges.
   1. Depth: 2 inches.

2.4 AUXILIARY MATERIALS

A. General: Provide auxiliary materials that comply with referenced installation standards.

1. Fasteners for Metal Framing: Of type, material, size, corrosion resistance, holding power, and other properties required to fasten steel members to substrates.

PART 3 - EXECUTION

3.1 EXAMINATION

A. Examine areas and substrates, with Installer present, and including welded hollow-metal frames, cast-in anchors, and structural framing, for compliance with requirements and other conditions affecting performance of the Work.

B. Proceed with installation only after unsatisfactory conditions have been corrected.

3.2 INSTALLATION, GENERAL

A. Installation Standard: ASTM C 754.
   1. Gypsum Board Assemblies: Also comply with requirements in ASTM C 840 that apply to framing installation.

B. Install supplementary framing, and blocking to support fixtures, equipment services, heavy trim, grab bars, toilet accessories, furnishings, or similar construction.

C. Install bracing at terminations in assemblies.

D. Do not bridge building control and expansion joints with non-load-bearing steel framing members. Frame both sides of joints independently.

3.3 INSTALLING FRAMED ASSEMBLIES

A. Install framing system components according to spacings indicated, but not greater than spacings required by referenced installation standards for assembly types.
   1. Single-Layer Application: 24 inches o.c. unless otherwise indicated.

B. Where studs are installed directly against exterior masonry walls or dissimilar metals at exterior walls, install isolation strip between studs and exterior wall.

C. Install studs so flanges within framing system point in same direction.

D. Install tracks (runners) at floors and overhead supports. Extend framing full height to structural supports or substrates above suspended ceilings except where partitions are indicated to terminate at suspended ceilings. Continue framing around ducts penetrating partitions above ceiling.
   1. Slip-Type Head Joints: Where framing extends to overhead structural supports, install to produce joints at tops of framing systems that prevent axial loading of finished assemblies.
   2. Door Openings: Screw vertical studs at jambs to jamb anchor clips on door frames; install runner track section (for cripple studs) at head and secure to jamb studs.
      a. Install two studs at each jamb unless otherwise indicated.
      b. Install cripple studs at head adjacent to each jamb stud, with a minimum 1/2-inch clearance from jamb stud to allow for installation of control joint in finished assembly.
      c. Extend jamb studs through suspended ceilings and attach to underside of overhead structure.

3. Other Framed Openings: Frame openings other than door openings the same as required for door openings unless otherwise indicated. Install framing below sills of openings to match framing required above door heads.

3.4 Installation Tolerance: Install each framing member so fastening surfaces vary not more than 1/8 inch from the plane formed by faces of adjacent framing.

3.5 INSTALLING SUSPENSION SYSTEMS

A. Install suspension system components according to spacings indicated, but not greater than spacings required by referenced installation standards for assembly types.
   1. Hangers: 48 inches o.c.
   2. Carrying Channels (Main Runners): 48 inches o.c.
   3. Furring Channels (Furring Members): 24 inches o.c.

B. Isolate suspension systems from building structure where they abut or are penetrated by building structure to prevent transfer of loading imposed by structural movement.

C. Suspend hangers from building structure as follows:
   1. Install hangers plumb and free from contact with insulation or other objects within ceiling plenum that are not part of supporting structural or suspension system.
      a. Splay hangers only where required to miss obstructions and offset resulting horizontal forces by bracing, countersplaying, or other equally effective means.
   2. Where width of ducts and other construction within ceiling plenum produces hanger spacings that interfere with locations of hangers required to support standard suspension system members, install supplemental suspension members and hangers in the form of trapezes or equivalent devices.
      a. Size supplemental suspension members and hangers to support ceiling loads within performance limits established by referenced installation standards.
   3. Wire Hangers: Secure by looping and wire tying, either directly to structures or to inserts, eye screws, or other devices and fasteners that are secure and appropriate for substrate, and in a manner that will not cause hangers to deteriorate or otherwise fail.
   4. Flat Hangers: Secure to structure, including intermediate framing members, by attaching to inserts, eye screws, or other devices and fasteners that are secure and appropriate for structure and hanger, and in a manner that will not cause hangers to deteriorate or otherwise fail.
   5. Do not attach hangers to steel roof deck.
   6. Do not attach hangers to permanent metal forms. Furnish cast-in-place hanger inserts that extend through forms.
   7. Do not attach hangers to rolled-in hanger tabs of composite steel floor deck.
   8. Do not connect or suspend steel framing from ducts, pipes, or conduit.

D. Installation Tolerances: Install suspension systems that are level to within 1/8 inch in 12 feet measured lengthwise on each member that will receive finishes and transversely between parallel members that will receive finishes.

END OF SECTION 09 2216

SECTION 092900 - GYPSUM BOARD

PART 1 - GENERAL

1.1 RELATED DOCUMENTS

A. Drawings and general provisions of the Contract, including General and Supplementary Conditions and Division 01 Specification Sections, apply to this Section.

1.2 SUMMARY

A. Section Includes:

1. Interior gypsum board.

1.3 ACTION SUBMITTALS

A. Product Data: For each type of product.

1.4 DELIVERY, STORAGE AND HANDLING

A. Store materials inside under cover and keep them dry and protected against weather, condensation, direct sunlight, construction traffic, and other potential causes of damage. Stack panels flat and supported on risers on a flat platform to prevent sagging.

1.5 FIELD CONDITIONS

A. Environmental Limitations: Comply with ASTM C 840 requirements or gypsum board manufacturer's written recommendations, whichever are more stringent.

B. Do not install paper-faced gypsum panels until installation areas are enclosed and conditioned.

C. Do not install panels that are wet, those that are moisture damaged, and those that are mold damaged.

1. Indications that panels are wet or moisture damaged include, but are not limited to, discoloration, sagging, or irregular shape.
2. Indications that panels are mold damaged include, but are not limited to, fuzzy or splotchy surface contamination and discoloration.

PART 2 - PRODUCTS

2.1 PERFORMANCE REQUIREMENTS

A. Low-Emitting Materials: For ceiling and wall assemblies, provide materials and construction identical to those tested in assembly and complying with the testing and product requirements of the California Department of Health Services' "Standard Practice for the Testing of Volatile Organic Emissions from Various Sources Using Small-Scale Environmental Chambers."

2.2 GYPSUM BOARD, GENERAL

A. Size: Provide maximum lengths and widths available that will minimize joints in each area and that correspond with support system indicated.

2.3 INTERIOR GYPSUM BOARD

A. Manufacturers: Subject to compliance with requirements, provide products by one of the following:

1. American Gypsum.
2. CertainTeed Corp.
3. Georgia-Pacific Gypsum LLC.
4. National Gypsum Company.
5. USG Corporation.
6. or approved equal.

B. Moisture- and Mold-Resistant Gypsum Board: ASTM C 1396/C 1396M. With moisture- and mold-resistant core and paper surfaces.

1. Basis of Design Product: National Gypsum, Gold Bond e^2 CP Interior Extreme
2. Core: 1/2 inch, regular type with coated fiberglass mat on face and back.
3. Long Edges: Tapered.
4. Mold Resistance: ASTM D 3273, score of 10 as rated according to ASTM D 3274.

2.4 TRIM ACCESSORIES

A. Interior Trim: ASTM C 1047.

1. Material: Galvanized or aluminum-coated steel sheet or rolled zinc.
2. Shapes:
   a. LC-Bead: J-shaped; exposed long flange receives joint compound.
   b. L-Bead: L-shaped; exposed long flange receives joint compound.
   c. U-Bead: J-shaped; exposed short flange does not receive joint compound.
   d. Expansion (control) joint.

2.5 JOINT TREATMENT MATERIALS

A. General: Comply with ASTM C 475/C 475M.

B. Joint Tape:

1. Interior Gypsum Board: Paper.
2. Glass-Mat Gypsum Sheathing Board: 10-by-10 glass mesh.
3. Tile Backing Panels: As recommended by panel manufacturer.

C. Joint Compound for Interior Gypsum Board: For each coat use formulation that is compatible with other compounds applied on previous or for successive coats.

1. Prefilling: At open joints, rounded or beveled panel edges, and damaged surface areas, use setting-type taping compound.
2. Embedding and First Coat: For embedding tape and first coat on joints, fasteners, and trim flanges, use setting-type taping compound.

   a. Use setting-type compound for installing paper-faced metal trim accessories.

3. Fill Coat: For second coat, use setting-type, sandable topping compound.
4. Finish Coat: For third coat, use setting-type, sandable topping compound.
5. Skim Coat: For final coat of Level 5 finish, use setting-type, sandable topping compound .

2.6 AUXILIARY MATERIALS

A. General: Provide auxiliary materials that comply with referenced installation standards and manufacturer's written recommendations.

B. Steel Drill Screws: ASTM C 1002, unless otherwise indicated.

1. Use screws complying with ASTM C 954 for fastening panels to steel members from 0.033 to 0.112 inch thick.
2. For fastening cementitious backer units, use screws of type and size recommended by panel manufacturer.

PART 3 - EXECUTION

3.1 EXAMINATION

A. Examine areas and substrates including welded hollow-metal frames and framing, with Installer present, for compliance with requirements and other conditions affecting performance.

B. Examine panels before installation. Reject panels that are wet, moisture damaged, and mold damaged.

C. Proceed with installation only after unsatisfactory conditions have been corrected.

3.2 APPLYING AND FINISHING PANELS, GENERAL

A. Comply with ASTM C 840.

B. Install ceiling panels across framing to minimize the number of abutting end joints and to avoid abutting end joints in central area of each ceiling. Stagger abutting end joints of adjacent panels not less than one framing member.

C. Install panels with face side out. Butt panels together for a light contact at edges and ends with not more than 1/16 inch of open space between panels. Do not force into place.

D. Locate edge and end joints over supports, except in ceiling applications where intermediate supports or gypsum board back-blocking is provided behind end joints. Do not place tapered edges against cut edges or ends. Stagger vertical joints on opposite sides of partitions. Do not make joints other than control joints at corners of framed openings.

E. Form control and expansion joints with space between edges of adjoining gypsum panels.

F. Cover both faces of support framing with gypsum panels in concealed spaces (above ceilings, etc.), except in chases braced internally.

1. Unless concealed application is indicated or required for sound, fire, air, or smoke ratings, coverage may be accomplished with scraps of not less than 8 sq. ft. in area.
2. Fit gypsum panels around ducts, pipes, and conduits.
3. Where partitions intersect structural members projecting below underside of floor/roof slabs and decks, cut gypsum panels to fit profile formed by structural members; allow 1/4- to 3/8-inch- wide joints to install sealant.

G. Isolate perimeter of gypsum board applied to non-load-bearing partitions at structural abutments, except floors. Provide 1/4- to 1/2-inch- wide spaces at these locations and trim edges with edge trim where edges of panels are exposed. Seal joints between edges and abutting structural surfaces with acoustical sealant.

H. Attachment to Steel Framing: Attach panels so leading edge or end of each panel is attached to open (unsupported) edges of stud flanges first.

I. Install sound attenuation blankets before installing gypsum panels unless blankets are readily installed after panels have been installed on one side.

3.3 APPLYING INTERIOR GYPSUM BOARD

A. Install interior gypsum board in the following locations:

1. Moisture- and Mold-Resistant Type: On all surfaces.

B. Single-Layer Application:

1. On ceilings, apply gypsum panels before wall/partition board application to greatest extent possible and at right angles to framing unless otherwise indicated.
2. On partitions/walls, apply gypsum panels vertically (parallel to framing) unless otherwise indicated or required by fire-resistance-rated assembly, and minimize end joints.

a. Stagger abutting end joints not less than one framing member in alternate courses of panels.
b. At stairwells and other high walls, install panels horizontally unless otherwise indicated or required by fire-resistance-rated assembly.

3. On Z-furring members, apply gypsum panels vertically (parallel to framing) with no end joints. Locate edge joints over furring members.
4. Fastening Methods: Apply gypsum panels to supports with steel drill screws.

3.4 INSTALLING TRIM ACCESSORIES

A. General: For trim with back flanges intended for fasteners, attach to framing with same fasteners used for panels. Otherwise, attach trim according to manufacturer's written instructions.

B. Control Joints: Install control joints according to ASTM C 840 and in specific locations approved by Architect for visual effect.

C. Interior Trim: Install in the following locations:
1. LC-Bead: Use at exposed panel edges.
2. L-Bead: Use at exposed panel edges.
3. U-Bead: Use at exposed panel edges.

3.5 FINISHING GYPSUM BOARD

A. General: Treat gypsum board joints, interior angles, edge trim, control joints, penetrations, fastener heads, surface defects, and elsewhere as required to prepare gypsum board surfaces for decoration. Promptly remove residual joint compound from adjacent surfaces.

B. Prefill open joints, rounded or beveled edges, and damaged surface areas.

C. Apply joint tape over gypsum board joints, except for trim products specifically indicated as not intended to receive tape.

D. Gypsum Board Finish Levels: Finish panels to levels indicated below and according to ASTM C 840:

1. Level 1: Ceiling plenum areas, concealed areas, and where indicated.
2. Level 2: Panels that are substrate for tile.
3. Level 3: Not Applicable
4. Level 4: At panel surfaces that will be exposed to view unless otherwise indicated. Typical for this project.

a. Primer and its application to surfaces are specified in Section 099123 "Interior Painting."

5. Level 5: Where indicated on Drawings.

a. Primer and its application to surfaces are specified in Section 099123 "Interior Painting."

3.6 PROTECTION

A. Protect adjacent surfaces from drywall compound and promptly remove from floors and other non-drywall surfaces. Repair surfaces stained, marred, or otherwise damaged during drywall application.

B. Protect installed products from damage from weather, condensation, direct sunlight, construction, and other causes during remainder of the construction period.

C. Remove and replace panels that are wet, moisture damaged, and mold damaged.

1. Indications that panels are wet or moisture damaged include, but are not limited to, discoloration, sagging, or irregular shape.
2. Indications that panels are mold damaged include, but are not limited to, fuzzy or splotchy surface contamination and discoloration.

END OF SECTION 092900

SECTION 093013 - CERAMIC TILING

PART 1 - GENERAL

1.1 RELATED DOCUMENTS

A. Drawings and general provisions of the Contract, including General and Supplementary Conditions and Division 01 Specification Sections, apply to this Section.

1.2 SUMMARY

A. Section Includes:
   1. Quarry tile.

1.3 DEFINITIONS

A. General: Definitions in the ANSI A108 series of tile installation standards and in ANSI A137.1 apply to Work of this Section unless otherwise specified.

B. ANSI A108 Series: ANSI A108.01, ANSI A108.02, ANSI A108.1A, ANSI A108.1B, ANSI A108.1C, ANSI A108.4, ANSI A108.5, ANSI A108.6, ANSI A108.8, ANSI A108.9, ANSI A108.10, ANSI A108.11, ANSI A108.12, ANSI A108.13, ANSI A108.14, ANSI A108.15, ANSI A108.16, and ANSI A108.17, which are contained in its "Specifications for Installation of Ceramic Tile."

C. Module Size: Actual tile size plus joint width indicated.

D. Face Size: Actual tile size, excluding spacer lugs.

1.4 PREINSTALLATION MEETINGS

A. Preinstallation Conference: Conduct conference at Project site

   1. Review requirements in ANSI A108.01 for substrates and for preparation by other trades.

1.5 ACTION SUBMITTALS

A. Product Data: For each type of product.

B. Samples for Verification:

   1. Full-size units of each type and composition of tile and for each color and finish required.
   2. Full-size units of each type of trim and accessory for each color and finish required.

1.6 INFORMATIONAL SUBMITTALS

A. Qualification Data: For Installer.

B. Master Grade Certificates: For each shipment, type, and composition of tile, signed by tile manufacturer and Installer.

C. Product Certificates: For each type of product.

D. Product Test Reports: For tile-setting and -grouting products.

1.7 MAINTENANCE MATERIAL SUBMITTALS

A. Furnish extra materials that match and are from same production runs as products installed and that are packaged with protective covering for storage and identified with labels describing contents.

1. Tile and Trim Units: Furnish quantity of full-size units equal to 3 percent of amount installed for each type, composition, color, pattern, and size indicated.

2. Grout: Furnish quantity of grout equal to 3 percent of amount installed for each type, composition, and color indicated.

1.8 QUALITY ASSURANCE

A. Installer Qualifications:

1. Installer is a five-star member of the National Tile Contractors Association or a Trowel of Excellence member of the Tile Contractors' Association of America.
2. Installer's supervisor for Project holds the International Masonry Institute's Foreman Certification.
3. Installer employs Ceramic Tile Education Foundation Certified Installers or installers recognized by the U.S. Department of Labor as Journeyman Tile Layers.

1.9 DELIVERY, STORAGE, AND HANDLING

A. Deliver and store packaged materials in original containers with seals unbroken and labels intact until time of use. Comply with requirements in ANSI A137.1 for labeling tile packages.

B. Store tile and cementitious materials on elevated platforms, under cover, and in a dry location.

C. Store aggregates where grading and other required characteristics can be maintained and contamination can be avoided.

D. Store liquid materials in unopened containers and protected from freezing.

1.10 FIELD CONDITIONS

A. Environmental Limitations: Do not install tile until construction in spaces is complete and ambient temperature and humidity conditions are maintained at the levels indicated in referenced standards and manufacturer's written instructions.

PART 2 - PRODUCTS

2.1 MANUFACTURERS

A. Source Limitations for Tile: Obtain tile from single source or producer. Match existing on the floor.

1. Obtain tile of each type and color or finish from same production run and of consistent quality in appearance and physical properties for each contiguous area.

B. Source Limitations for Setting and Grouting Materials: Obtain ingredients of a uniform quality for each mortar, adhesive, and grout component from single manufacturer and each aggregate from single source or producer.

1. Obtain setting and grouting materials, except for unmodified Portland cement and aggregate, from single manufacturer.
2. Obtain waterproof membrane and crack isolation membrane, except for sheet products, from manufacturer of setting and grouting materials.

C. Source Limitations for Other Products: Obtain each of the following products specified in this Section from a single manufacturer:
1. Waterproof membrane.
2. Crack isolation membrane.
3. Metal edge strips.

2.2 PRODUCTS, GENERAL

A. ANSI Ceramic Tile Standard: Provide tile that complies with ANSI A137.1 for types, compositions, and other characteristics indicated.

1. Provide tile complying with Standard grade requirements[unless otherwise indicated].

B. ANSI Standards for Tile Installation Materials: Provide materials complying with ANSI A108.02, ANSI standards referenced in other Part 2 articles, ANSI standards referenced by TCNA installation methods specified in tile installation schedules, and other requirements specified.

C. Factory Blending: For tile exhibiting color variations within ranges, blend tile in factory and package so tile units taken from one package show same range in colors as those taken from other packages and match approved Samples.

D. Mounting: For factory-mounted tile, provide back- or edge-mounted tile assemblies as standard with manufacturer unless otherwise indicated.

2.3 TILE PRODUCTS

A. Ceramic Tile Type CT-1: Unglazed square-edged quarry tile.
   1. Vitreous body, frostproof, unglazed, non-slip, v-backed, ground four sides after firing.
   2. Size: 102 mm x 203 mm (4 inch x 8 inch), nominal facial dimensions.
   3. Product and manufacturer:
      a. Terrain, Color 48 Moroccan Brown, Blend 45, by Summitville Tiles, Inc.; to match size and color range of tile in public area of existing Panda House.
      b. No known equal.

2.4 SETTING MATERIALS

B. Factory-Blended Thin-Set Mortar Mixes:
   1. Description:
      a. Factory blended mortar mixes consisting of portland cement, sand and additives, complying with ANSI 118.4.
      b. Provide with latex additive in lieu of water.
   2. Acceptable products and manufacturers:
      a. Hydroment Tile-Mate by Bostik.
      b. Laticrete 272 by Laticrete International, Inc.
      c. Kerabond by Mapei.
      d. Full Set or Full Set Plus Premium by TEC.
      e. Smithsonian National Zoological Park approved equal.

C. Liquid Latex Additives:
   1. General:
      a. Acrylic or SBR latex additives to be mixed with mortar or grout in lieu of all or part of water.
      b. Grout and latex additive shall be products of same manufacturer.
   2. Acceptable products and manufacturers:
      a. For thin-set mortar mixes:
         1) Hydroment 425 by Bostik.
         2) Laticrete 3701 or 333 by Laticrete International, Inc.
         3) Keralastic by Mapei.
         4) Full Bond by TEC Specialty Products Inc.
         5) Smithsonian National Zoological Park approved equal.
      b. For grout:
         1) Hydroment 425 by Bostik.
         2) Laticrete 1776 by Laticrete International, Inc.
         3) Acrylic Grout Additive 869 by TEC Specialty Products Inc.
         4) Smithsonian National Zoological Park approved equal.

2.5 GROUT MATERIALS

D. Epoxy Grout for Floor Tile:
   1. Description: Factory blended epoxy grout complying with ANSI A118.3; resistant to acids, alkalis, oils and food wastes.
   2. Color: To match existing, Mepei #47 Charcoal.
   3. Acceptable products and manufacturers:
      a. U-Poxy/AARXII by Bostik.
      b. Latapoxy SP-100 by Laticrete International, Inc.
      c. Kerapoxy by Mapei Corporation.
      d. Smithsonian National Zoological Park approved equal.

2.6 MISCELLANEOUS MATERIALS

A. Tile Cleaner: A neutral cleaner capable of removing soil and residue without harming tile and grout surfaces, specifically approved for materials and installations indicated by tile and grout manufacturers.

B. Floor Sealer: Manufacturer's standard product for sealing grout joints and that does not change color or appearance of grout.

2.7 MIXING MORTARS AND GROUT

A. Mix mortars and grouts to comply with referenced standards and mortar and grout manufacturers' written instructions.

B. Add materials, water, and additives in accurate proportions.

C. Obtain and use type of mixing equipment, mixer speeds, mixing containers, mixing time, and other procedures to produce mortars and grouts of uniform quality with optimum performance characteristics for installations indicated.

PART 3 - EXECUTION

3.1 EXAMINATION

A. Examine substrates, areas, and conditions where tile will be installed, with Installer present, for compliance with requirements for installation tolerances and other conditions affecting performance of the Work.

   1. Verify that substrates for setting tile are firm; dry; clean; free of coatings that are incompatible with tile-setting materials, including curing compounds and other substances that contain soap, wax, oil, or silicone; and comply with flatness tolerances required by ANSI A108.01 for installations indicated.
   2. Verify that concrete substrates for tile floors installed with thinset mortar comply with surface finish requirements in ANSI A108.01 for installations indicated.

a. Verify that surfaces that received a steel trowel finish have been mechanically scarified.
b. Verify that protrusions, bumps, and ridges have been removed by sanding or grinding.

3. Verify that installation of grounds, anchors, recessed frames, electrical and mechanical units of work, and similar items located in or behind tile has been completed.
4. Verify that joints and cracks in tile substrates are coordinated with tile joint locations; if not coordinated, adjust joint locations in consultation with Architect.

B. Proceed with installation only after unsatisfactory conditions have been corrected.

3.2 PREPARATION

A. Fill cracks, holes, and depressions in concrete substrates for tile floors installed with thinset mortar with trowelable leveling and patching compound specifically recommended by tile-setting material manufacturer.

B. Where indicated, prepare substrates to receive waterproofing by applying a reinforced mortar bed that complies with ANSI A108.1A and is sloped 1/4 inch per foot (1:50) toward drains.

C. Blending: For tile exhibiting color variations, verify that tile has been factory blended and packaged so tile units taken from one package show same range of colors as those taken from other packages and match approved Samples. If not factory blended, either return to manufacturer or blend tiles at Project site before installing.

3.3 CERAMIC TILE INSTALLATION

A. Comply with TCNA's "Handbook for Ceramic, Glass, and Stone Tile Installation" for TCNA installation methods specified in tile installation schedules. Comply with parts of the ANSI A108 series "Specifications for Installation of Ceramic Tile" that are referenced in TCNA installation methods, specified in tile installation schedules, and apply to types of setting and grouting materials used.

1. For the following installations, follow procedures in the ANSI A108 series of tile installation standards for providing 95 percent mortar coverage:

a. Exterior tile floors.
b. Tile floors in wet areas.
c. Tile floors consisting of tiles 8 by 8 inches (200 by 200 mm) or larger.
d. Tile floors consisting of rib-backed tiles.

B. Extend tile work into recesses and under or behind equipment and fixtures to form complete covering without interruptions unless otherwise indicated. Terminate work neatly at obstructions, edges, and corners without disrupting pattern or joint alignments.

C. Accurately form intersections and returns. Perform cutting and drilling of tile without marring visible surfaces. Carefully grind cut edges of tile abutting trim, finish, or built-in items for

straight aligned joints. Fit tile closely to electrical outlets, piping, fixtures, and other penetrations so plates, collars, or covers overlap tile.

D. Provide manufacturer's standard trim shapes where necessary to eliminate exposed tile edges.

E. Where accent tile differs in thickness from field tile, vary setting-bed thickness so that tiles are flush.

F. Jointing Pattern: Lay tile in grid pattern unless otherwise indicated. Lay out tile work and center tile fields in both directions in each space or on each wall area. Lay out tile work to minimize the use of pieces that are less than half of a tile. Provide uniform joint widths unless otherwise indicated.

1. For tile mounted in sheets, make joints between tile sheets same width as joints within tile sheets so joints between sheets are not apparent in finished work.
2. Where adjoining tiles on floor, base, walls, or trim are specified or indicated to be same size, align joints.
3. Where tiles are specified or indicated to be whole integer multiples of adjoining tiles on floor, base, walls, or trim, align joints unless otherwise indicated.

G. Joint Widths: Unless otherwise indicated, install tile with the following joint widths:
1. Quarry Tile: To match existing joint widths.

H. Floor Sealer: Apply floor sealer to cementitious grout joints in tile floors according to floor-sealer manufacturer's written instructions. As soon as floor sealer has penetrated grout joints, remove excess sealer and sealer from tile faces by wiping with soft cloth.

3.4 ADJUSTING AND CLEANING

A. Remove and replace tile that is damaged or that does not match adjoining tile. Provide new matching units, installed as specified and in a manner to eliminate evidence of replacement.

B. Cleaning: On completion of placement and grouting, clean all ceramic tile surfaces so they are free of foreign matter.

1. Remove grout residue from tile as soon as possible.
2. Clean grout smears and haze from tile according to tile and grout manufacturer's written instructions but no sooner than 10 days after installation. Use only cleaners recommended by tile and grout manufacturers and only after determining that cleaners are safe to use by testing on samples of tile and other surfaces to be cleaned. Protect metal surfaces and plumbing fixtures from effects of cleaning. Flush surfaces with clean water before and after cleaning.

3.5 PROTECTION

A. Protect installed tile work with kraft paper or other heavy covering during construction period to prevent staining, damage, and wear. If recommended by tile manufacturer, apply coat of neutral protective cleaner to completed tile walls and floors.

B. Prohibit foot and wheel traffic from tiled floors for at least seven days after grouting is completed.

C. Before final inspection, remove protective coverings and rinse neutral protective cleaner from tile surfaces.

3.6 INTERIOR CERAMIC TILE INSTALLATION SCHEDULE

A. Interior Floor Installations, Concrete Subfloor:

1. Ceramic Tile Installation: TCNA F115 (ANSI A108.5); thinset mortar.

   a. Ceramic Tile Type: Quarry Tile to match existing, adjacent.
   b. Thinset Mortar: TCA Latex-Portland Cement Mortar.
   c. Grout: Epoxy Grout.

END OF SECTION 093013

SECTION 095113 - ACOUSTICAL PANEL CEILINGS

PART 1 - GENERAL

1.1 RELATED DOCUMENTS

A. Drawings and general provisions of the Contract, including General and Supplementary Conditions and Division 01 Specification Sections, apply to this Section.

1.2 SUMMARY

A. Section includes acoustical panels and exposed suspension systems for ceilings.

B. Products furnished, but not installed under this Section, include anchors, clips, and other ceiling attachment devices to be cast in concrete.

1.3 ACTION SUBMITTALS

A. Product Data: For each type of product.

B. Samples: For each exposed product and for each color and texture specified, 6 inches (150 mm) in size.

1.4 CLOSEOUT SUBMITTALS

A. Maintenance Data: For finishes to include in maintenance manuals.

1.5 SYSTEM REQUIREMENTS

A. Interface With Other Systems: Coordinate layout and installation of acoustical ceiling units, suspension system components and accessories with other Work supported by, or penetrating through, ceilings, including but not limited to light fixtures, fire and smoke detection system components, HVAC equipment, fire-suppression system components and partition system.

1.6 QUALITY ASSURANCE

A. Testing Agency Qualifications: Qualified according to NVLAP for testing indicated.

1.7 DELIVERY, STORAGE, AND HANDLING

A. Deliver acoustical panels, suspension-system components, and accessories to Project site in original, unopened packages and store them in a fully enclosed, conditioned space where they

will be protected against damage from moisture, humidity, temperature extremes, direct sunlight, surface contamination, and other causes.

B. Before installing acoustical panels, permit them to reach room temperature and a stabilized moisture content.

C. Handle acoustical panels carefully to avoid chipping edges or damaging units in any way.

1.8 FIELD CONDITIONS

A. Environmental Limitations: Do not install acoustical panel ceilings until spaces are enclosed and weatherproof, wet work in spaces is complete and dry, work above ceilings is complete, and ambient temperature and humidity conditions are maintained at the levels indicated for Project when occupied for its intended use.

1. Pressurized Plenums: Operate ventilation system for not less than 48 hours before beginning acoustical panel ceiling installation.

PART 2 - PRODUCTS

2.1 PERFORMANCE REQUIREMENTS

A. Surface-Burning Characteristics: Comply with ASTM E 84; testing by a qualified testing agency. Identify products with appropriate markings of applicable testing agency.

1. Flame-Spread Index: Comply with ASTM E 1264 for Class **A** materials.
2. Smoke-Developed Index: **50** or less.

B. Fire-Resistance Ratings: Comply with ASTM E 119; testing by a qualified testing agency. Identify products with appropriate markings of applicable testing agency.

1. Indicate design designations from UL's "Fire Resistance Directory" or from the listings of another qualified testing agency.

2.2 PRODUCTS AND MANUFACTURERS

A. Acceptable Products and Manufacturers - Acoustical Panels: Match existing, adjacent panels and suspension system.
1. Listed products establish standard of quality and are manufactured by USG Interiors, Inc.
2. Equivalent products by the following manufacturers may be acceptable provided they comply with requirements of Contract Documents:
   a. Armstrong World Industries.
   b. BPB Celotex Corporation.
   c. Smithsonian National Zoological Park approved equal.

2.3 ACOUSTICAL PANELS

A. Type ACP-1: Match existing, adjacent panels, based on the following:
   1. Description: Mineral fiber with non-directional pattern.
   2. Classification, per ASTM E1264: Type III, Form 2, Pattern C, D.
   3. Size: 610 mm x 610 mm x 16 mm thick (24 inch x 24 inch x 5/8 inch thick).
   4. Edge profile: Shadowline Taper lay-in.
   5. Finish: Factory applied washable vinyl latex paint.
   6. Color: Black.
   7. Flame spread: ASTM E1264, 0-25.
   8. Noise-reduction coefficient (NRC): ASTM E1264, 0.55.
   9. Ceiling attenuation class (CAC Range): ASTM E1264, 35 minimum.
   10. Recycled content: Not less than 40%.
   11. Humidity resistance: Resistant up to 40EC (104EF) and 90% relative humidity with visible sag.
   12. Acceptable products and manufacturers:
      a. Radar ClimaPlus 2220, color Flat Black 205, by USG Interiors, Inc.
      b. Smithsonian National Zoological Park approved equal.

2.4 METAL SUSPENSION SYSTEMS, GENERAL

A. Exposed Suspension System - Type ACP-1 Panels: Match existing, adjacent suspension system, based on the following:
   1. Description:
      a. ASTM C635, intermediate duty, exposed T with 24 mm (15/16 inch) wide face; interlocking components.
      b. End condition of cross runners: Butt-edge.
   2. Materials: Cold-rolled steel with hot-dipped galvanized coating.
   3. Finish and color:
      a. Manufacturer's standard factory finish..
      b. Color: Black.
   4. Acceptable products and manufacturers:
      a. Prelude XL by Armstrong.
      b. 200 Snap-Grid System by Chicago Metallic Corp.
      c. DX by USG Interiors.
      d. Smithsonian National Zoological Park approved equal.

2.5 ACCESSORIES

A. Trim:
   1. Manufacturer's standard trim and edge moldings to suit suspension system requirements; same finish as suspension system.
   2. Provide edge moldings to fit penetrations exactly, including circular penetrations.
   3. Expansion joints: Provide framing and closure trim.

B. Suspension Accessories: Provide hold-down clips, splices and stabilizer bars required for suspended grid system.

C. Grid Attachment Devices:
   1. General: Size devices for 5 times loads imposed by complete system.
   2. Hanger anchorage devices: Screws, clips, bolts, or other devices applicable to indicated method of structural anchorage for ceiling hangers and whose suitability for use intended has been proven though standard construction practices or by certified test data.
   3. Hangers:
      a. As recommended by manufacturer and as required to comply with structural classification.
      b. Wire hangers: ASTM A641, not less than 2.6 mm (12 gage), galvanized carbon steel wire, soft temper, pre-stretched.

PART 3 - EXECUTION

3.1 EXAMINATION

A. Examine substrates, areas, and conditions, including structural framing to which acoustical panel ceilings attach or abut, with Installer present, for compliance with requirements specified in this and other Sections that affect ceiling installation and anchorage and with requirements for installation tolerances and other conditions affecting performance of acoustical panel ceilings.

B. Examine acoustical panels before installation. Reject acoustical panels that are wet, moisture damaged, or mold damaged.

C. Proceed with installation only after unsatisfactory conditions have been corrected.

3.2 PREPARATION

A. Measure each ceiling area and establish layout of acoustical panels to balance border widths at opposite edges of each ceiling. Avoid using less-than-half-width panels at borders, and comply with layout shown on reflected ceiling plans.

3.3 INSTALLATION

A. General: Install acoustical panel ceilings to comply with ASTM C 636/C 636M and seismic design requirements indicated, according to manufacturer's written instructions and CISCA's "Ceiling Systems Handbook."

B. Suspend ceiling hangers from building's structural members and as follows:

   1. Install hangers plumb and free from contact with insulation or other objects within ceiling plenum that are not part of supporting structure or of ceiling suspension system.
   2. Splay hangers only where required to miss obstructions; offset resulting horizontal forces by bracing, countersplaying, or other equally effective means.
   3. Where width of ducts and other construction within ceiling plenum produces hanger spacings that interfere with location of hangers at spacings required to support standard

suspension-system members, install supplemental suspension members and hangers in form of trapezes or equivalent devices.

4. Secure wire hangers to ceiling-suspension members and to supports above with a minimum of three tight turns. Connect hangers directly either to structures or to inserts, eye screws, or other devices that are secure and appropriate for substrate and that will not deteriorate or otherwise fail due to age, corrosion, or elevated temperatures.
5. Secure flat, angle, channel, and rod hangers to structure, including intermediate framing members, by attaching to inserts, eye screws, or other devices that are secure and appropriate for both the structure to which hangers are attached and the type of hanger involved. Install hangers in a manner that will not cause them to deteriorate or fail due to age, corrosion, or elevated temperatures.
6. Do not support ceilings directly from permanent metal forms or floor deck. Fasten hangers to cast-in-place hanger inserts, postinstalled mechanical or adhesive anchors, or power-actuated fasteners that extend through forms into concrete.
7. When steel framing does not permit installation of hanger wires at spacing required, install carrying channels or other supplemental support for attachment of hanger wires.
8. Do not attach hangers to steel deck tabs.
9. Do not attach hangers to steel roof deck. Attach hangers to structural members.
10. Space hangers not more than 48 inches (1200 mm) o.c. along each member supported directly from hangers unless otherwise indicated; provide hangers not more than 8 inches (200 mm) from ends of each member.
11. Size supplemental suspension members and hangers to support ceiling loads within performance limits established by referenced standards and publications.

C. Secure bracing wires to ceiling suspension members and to supports with a minimum of four tight turns. Suspend bracing from building's structural members as required for hangers, without attaching to permanent metal forms, steel deck, or steel deck tabs. Fasten bracing wires into concrete with cast-in-place or postinstalled anchors.

D. Install edge moldings and trim of type indicated at perimeter of acoustical ceiling area and where necessary to conceal edges of acoustical panels.

1. Screw attach moldings to substrate at intervals not more than 16 inches (400 mm) o.c. and not more than 3 inches (75 mm) from ends, leveling with ceiling suspension system to a tolerance of 1/8 inch in 12 feet (3.2 mm in 3.6 m). Miter corners accurately and connect securely.
2. Do not use exposed fasteners, including pop rivets, on moldings and trim.

E. Install suspension-system runners so they are square and securely interlocked with one another. Remove and replace dented, bent, or kinked members.

F. Install acoustical panels with undamaged edges and fit accurately into suspension-system runners and edge moldings. Scribe and cut panels at borders and penetrations to provide a neat, precise fit.

1. For square-edged panels, install panels with edges fully hidden from view by flanges of suspension-system runners and moldings.
2. For reveal-edged panels on suspension-system runners, install panels with bottom of reveal in firm contact with top surface of runner flanges.

3. For reveal-edged panels on suspension-system members with box-shaped flanges, install panels with reveal surfaces in firm contact with suspension-system surfaces and panel faces flush with bottom face of runners.
4. Paint cut edges of panel remaining exposed after installation; match color of exposed panel surfaces using coating recommended in writing for this purpose by acoustical panel manufacturer.
5. Protect lighting fixtures and air ducts to comply with requirements indicated for fire-resistance-rated assembly.

3.4 CLEANING

A. Clean exposed surfaces of acoustical panel ceilings, including trim, edge moldings, and suspension-system members. Comply with manufacturer's written instructions for cleaning and touchup of minor finish damage. Remove and replace ceiling components that cannot be successfully cleaned and repaired to permanently eliminate evidence of damage.

END OF SECTION 095113

SECTION **096723** - **RESINOUS FLOORING**

PART 1 - GENERAL

1.1 RELATED DOCUMENTS

A. The Contract Documents in their entirety, including the Drawings, Specifications/Project Manual, Construction Contract Clauses, and any other documents issued as part of the Contract, apply to this Section.

1.2 SUMMARY

A. Section Includes:
   1. Resinous flooring systems.
      a. Type RF-1: Epoxy resin with quartz aggregate flooring system.

B. Related Sections:
   1. Division 09 Section "Paint" for application of paint systems.

1.3 SUBMITTALS

A. Product Data: For each type of product indicated. Include manufacturer's technical data, application instructions, and recommendations for each resinous flooring component required.

B. Samples for Initial Selection: For each type of exposed finish required.

C. Samples for Verification: For each resinous flooring system required, 6 inches square, applied to rigid backing by Installer for this Project.
   1. Provide stepped Samples on backing large enough to illustrate buildup of flooring systems.

D. Installer Certificates: Signed by manufacturer certifying that installers comply with specified requirements.

E. Material Certificates: For each resinous flooring component, from manufacturer.

F. Material Test Reports: For each resinous flooring system.

G. Maintenance Data: For resinous flooring to include in maintenance manuals.

1.4 SYSTEM REQUIREMENTS

A. Flooring system components shall be water-based and contain no hydrocarbon solvents.
   1. Flash point (unmixed material): Not combustible.

1.5 QUALITY ASSURANCE

A. Installer Qualifications: Manufacturer's authorized representative who is trained and approved for installation of flooring systems required for this Project.
   1. Engage an installer who is certified in writing by resinous flooring manufacturer as qualified to apply resinous flooring systems indicated with not less than 5 years documented, successful experience with work comparable to Work of this Project, approved by resinous flooring manufacturer. Such approval shall be current as of the date of bid of this Project.

B. Source Limitations: Obtain primary resinous flooring materials, including primers, resins, hardening agents, grouting coats, and topcoats, from single source from single manufacturer. Provide secondary materials, including patching and fill material, joint sealant, and repair materials, of type and from source recommended by manufacturer of primary materials.

C. Mockups: Apply mockups to verify selections made under sample submittals and to demonstrate aesthetic effects and set quality standards for materials and execution.
   1. Apply full-thickness mockups on 48-inch- square floor area selected by COTR.
   2. Simulate finished lighting conditions for COTR's review of mockups.
   3. Obtain COTR's approval of sample installations before proceeding with subsequent Work.
   4. Approved mockups may become part of the completed Work if undisturbed at time of Substantial Completion.

D. Preinstallation Conference: Conduct conference at Project site.

1.6 DELIVERY, STORAGE, AND HANDLING

A. Deliver materials in original packages and containers, with seals unbroken, bearing manufacturer's labels indicating brand name and directions for storage and mixing with other components.

1.7 PROJECT CONDITIONS

A. Environmental Limitations: Comply with resinous flooring manufacturer's written instructions for substrate temperature, ambient temperature, moisture, ventilation, and other conditions affecting resinous flooring application.

B. Lighting: Provide permanent lighting or, if permanent lighting is not in place, simulate permanent lighting conditions during resinous flooring application.

C. Close spaces to traffic during resinous flooring application and for not less than 24 hours after application unless manufacturer recommends a longer period.

1.8 SEQUENCING AND SCHEDULING

A. Do not install resinous flooring until items that will penetrate resinous flooring have been installed.

PART 2 - PRODUCTS

2.1 RESINOUS FLOORING RF-1

A. Product and Manufacturer:
   1. Stonblend GSI, sealed with Stonseal GS7, custom color to match existing.
      a. Color: Custom to match adjacent flooring.
         1) Original Custom color mix: colors 50%-50% blend between Brownstone #415 and Quarry #414, by Stonhard, Inc.
   2. No known equal.

B. Resinous Flooring System:
   1. Description: Seamless, multi-colored quartz aggregate epoxy flooring system consisting of primer, trowel-applied body coat, grout coats, and sealing coats.
   2. Total system thickness: 5 mm (3/16) inch.
   3. Physical properties of cured flooring system:
      a. Compressive strength: Minimum 41.3 MPa (6000 psi) at 7 days, when tested in accordance with ASTM C579.

b. Tensile strength: Minimum 10.3 MPa (1500 psi), when tested in accordance with ASTM C307.
c. Flexural strength: Minimum 15.2 Mpa (2200 psi), when tested in accordance with ASTM C580.
d. Hardness: 85 - 90 Shore D, when tested in accordance with ASTM D2240.
e. Bond strength: More than 400 psi, 100 percent concrete failure, when tested in accordance with ASTM D4541.
f. Water absorption: Maximum 0.2%, when tested in accordance with ASTM C413.
g. Flammability: Self-extinguishing, when tested in accordance with ASTM D635; extent of burning maximum 6 mm (0.25 inch).

C. Components:
4. Primer:
a. Two-component epoxy primer, for concrete.
b. Product and manufacturer: Stonblend Primer by Stonhard, Inc.
5. Body coat:
a. Three-component troweled mortar, including epoxy resin, hardener, and colored quartz silica aggregates.
b. Aggregate color blend: As specified above.
c. Product and manufacturer: Stonblend GSI Base by Stonhard, Inc.
6. Grout coats: Two-component, clear, UV-resistant epoxy sealer.
7. Sealing coats:
a. Two-component, clear flat, high performance, water based VOC compliant polyurethane coating.
b. Product and manufacturer: Stonseal GS7 by Stonhard, Inc.

D. Reinforcing Membrane: Flexible resin formulation that is recommended by resinous flooring manufacturer for substrate and primer and body coats indicated and that prevents substrate cracks from reflecting through resinous flooring.

E. Patching and Fill Material: Resinous mortar underlayment product acceptable to resinous flooring manufacturer for the application.

F. Joint Sealants: Flexible, non-rigid sealant of type acceptable to resinous flooring manufacturer for type of service and joint conditions indicated.

PART 3 - EXECUTION

3.1 EXAMINATION

A. Examine substrates, with Installer present, for compliance with requirements and for other conditions affecting performance of traffic coatings.
1. For the record, prepare written report, endorsed by Installer, listing conditions detrimental to performance.
2. Verify compatibility with and suitability of substrates.
3. Begin coating application only after minimum concrete curing and drying period recommended by traffic coating manufacturer has passed, after unsatisfactory conditions have been corrected, and after surfaces are dry.

3.2 PREPARATION

A. General: Prepare and clean substrates according to resinous flooring manufacturer's written instructions for substrate indicated. Provide clean, dry substrate for resinous flooring application.

B. Provide sound concrete surfaces free of laitance, glaze, efflorescence, curing compounds, form-release agents, dust, dirt, grease, oil, and other contaminants incompatible with resinous flooring.
   1. Vacuum blast or shotblast surfaces in compliance with ASTM D4259, to remove laitance and contaminants, and to provide surface profile required to achieve mechanical bond as recommended by resinous flooring manufacturer
   2. Remove concrete fins, ridges, and other projections.
   3. Repair damaged and deteriorated concrete according to resinous flooring manufacturer's written instructions.
   4. Remove remaining loose material to provide a sound surface, and clean surfaces according to ASTM D 4258.

C. Verify that concrete substrates are dry and moisture-vapor emissions are within acceptable levels according to manufacturer's written instructions.
   1. Perform anhydrous calcium chloride test, ASTM F 1869. Proceed with application of resinous flooring only after substrates have maximum moisture-vapor-emission rate of 4 lb of water/1000 sq. ft. of slab area in 24 hours.
   2. Perform plastic sheet test, ASTM D 4263. Proceed with application only after testing indicates absence of moisture in substrates.
   3. Perform relative humidity test using in situ probes, ASTM F 2170. Proceed with installation only after substrates have a maximum 75 percent relative humidity level measurement.
   4. Verify that concrete substrates have neutral Ph and that resinous flooring will adhere to them. Perform tests recommended by manufacturer. Proceed with application only after substrates pass testing

3.3 APPLICATION

A. General: Apply components of resinous flooring system according to manufacturer's written instructions to produce a uniform, monolithic wearing surface of thickness indicated.
   1. Coordinate application of components to provide optimum adhesion of resinous flooring system to substrate, and optimum intercoat adhesion.
   2. Cure resinous flooring components according to manufacturer's written instructions. Prevent contamination during application and curing processes.

B. Resinous Materials: Mix components and prepare materials according to resinous flooring manufacturer's written instructions.

C. Use patching and fill material to fill holes and depressions in substrates according to manufacturer's written instructions.

D. Treat control joints and other substrate cracks to prevent cracks from reflecting through resinous flooring according to manufacturer's written instructions.
   1. Non-moving cracks: After shotblasting, fill nonmoving cracks with body coat epoxy material mixed with fumed silica to form a paste, in accordance with manufacturer’s instructions.
   2. Apply reinforcing membrane to substrate cracks if recommended by resinous flooring manufacturer.
   3. Moving cracks and control joints:
      a. Route large cracks, and remove dust and debris.
      b. Fill flush with flexible epoxy crack and joint filler.
   4. Moving control joints: Seal secondary control joints with polyurethane sealant.

E. Primer:
   1. Apply primer over prepared substrates.
   2. Coordinate timing of primer application with application of subsequent coat to ensure optimum adhesion between resinous flooring materials and substrate.

F. Body Coat: Screed material to distribute onto slab, and trowel body coat to provide smooth, closed, tight surface of required thickness. Smooth off laps, butts and joints in flooring.

G. Grout Coats:
   1. Allow base coat to cure at least 8 hours before applying grout coats.
   2. Scrape, and vacuum or sweep, base coat to remove loosely bonded aggregate.
   3. Pour material onto base coat, and distribute evenly using squeegee. Apply two grout coats.
   4. After application of second grout coat, backroll to remove squeegee lines and drips and provide uniform smooth surface.

H. Sealing Coats:
   1. Allow grout coat to cure at least 12 hours before applying finish coats.
   2. Scrape down heavy lines and lumps and sweep clean.
   3. Apply two coats of sealing coat at spreading rate recommended by manufacturer.
      a. Allow first coat to cure at least 12 hours before applying second coat.
      b. Remove surface imperfections by lightly abrading and vacuuming flooring surface.
      c. Apply second sealer coat perpendicular to first sealer coat.

3.4 FIELD QUALITY CONTROL

A. Contractor's Responsibilities:
   1. At direction of COTR and at locations designated by COTR, take 1 core sample per room with resinous flooring to verify thickness of finished floor system.
   2. For each sample of less than specified thickness, take 2 additional samples in same space.
   3. Repair damage caused by coring and correct deficiencies at no additional cost to Smithsonian National Zoological Park.

B. Independent Agency Responsibilities:
   1. COTR may at any time and any number of times during resinous flooring application require material samples for testing for compliance with requirements.
   2. Contractor shall engage an independent testing agency to take samples of materials being used. Material samples will be taken, identified, sealed, and certified in presence of Contractor and COTR.
   3. Testing agency will test samples for compliance with requirements, using applicable referenced testing procedures or, if not referenced, using testing procedures listed in manufacturer's product data.
   4. If test results show applied materials do not comply with specified requirements, pay for testing, remove noncomplying materials, prepare surfaces coated with unacceptable materials, and reapply flooring materials to comply with requirements.

3.5 PROTECTION

A. Follow manufacturer's recommended cure times before allowing foot traffic over flooring.

B. Protect resinous flooring from damage and wear during the remainder of construction period. Use protective methods and materials, including temporary covering, recommended in writing by resinous flooring manufacturer.

END OF SECTION 096723

SECTION 099123 - INTERIOR PAINTING

PART 1 - GENERAL

1.1 RELATED DOCUMENTS

A. Drawings and general provisions of the Contract, including General and Supplementary Conditions and Division 01 Specification Sections, apply to this Section.

1.2 SUMMARY

A. Section includes surface preparation and the application of paint systems on the following interior substrates:

1. Concrete.
2. Wood.
3. Steel.
4. Paint/ varnish for the murals to be provided by the mural artist.

1.3 DEFINITIONS

A. MPI Gloss Level 1: Not more than five units at 60 degrees and 10 units at 85 degrees, according to ASTM D 523.

B. MPI Gloss Level 2: Not more than 10 units at 60 degrees and 10 to 35 units at 85 degrees, according to ASTM D 523.

C. MPI Gloss Level 3: 10 to 25 units at 60 degrees and 10 to 35 units at 85 degrees, according to ASTM D 523.

D. MPI Gloss Level 4: 20 to 35 units at 60 degrees and not less than 35 units at 85 degrees, according to ASTM D 523.

E. MPI Gloss Level 5: 35 to 70 units at 60 degrees, according to ASTM D 523.

F. MPI Gloss Level 6: 70 to 85 units at 60 degrees, according to ASTM D 523.

G. MPI Gloss Level 7: More than 85 units at 60 degrees, according to ASTM D 523.

1.4 ACTION SUBMITTALS

A. Product Data: For each type of product. Include preparation requirements and application instructions.

1. Include Printout of current "MPI Approved Products List" for each product category specified, with the proposed product highlighted.
2. Indicate VOC content.

B. Samples for Verification: For each type of paint system and in each color and gloss of topcoat.

1. Submit Samples on rigid backing, 8 inches (200 mm) square.
2. Apply coats on Samples in steps to show each coat required for system.
3. Label each coat of each Sample.
4. Label each Sample for location and application area.

C. Product List: Cross-reference to paint system and locations of application areas. Use same designations indicated on Drawings and in schedules. Include color designations.

1.5 MAINTENANCE MATERIAL SUBMITTALS

A. Furnish extra materials, from the same product run, that match products installed and that are packaged with protective covering for storage and identified with labels describing contents.

1. Paint: 5 percent, but not less than 1 gal. (3.8 L) of each material and color applied.

1.6 DELIVERY, STORAGE, AND HANDLING

A. Store materials not in use in tightly covered containers in well-ventilated areas with ambient temperatures continuously maintained at not less than 45 deg F (7 deg C).

1. Maintain containers in clean condition, free of foreign materials and residue.
2. Remove rags and waste from storage areas daily.

1.7 FIELD CONDITIONS

A. Apply paints only when temperature of surfaces to be painted and ambient air temperatures are between 50 and 95 deg F (10 and 35 deg C).

B. Do not apply paints when relative humidity exceeds 85 percent; at temperatures less than 5 deg F (3 deg C) above the dew point; or to damp or wet surfaces.

PART 2 - PRODUCTS

2.1 MANUFACTURERS

A. Manufacturers: Subject to compliance with requirements, provide products by one of the following:

1. Benjamin Moore & Co.
2. Duron, Inc.

3. Sherwin-Williams Company (The).

B. Products: Subject to compliance with requirements, available products that may be incorporated into the Work include, but are not limited to products listed in the Interior Painting Schedule for the paint category indicated.

2.2 PAINT, GENERAL

A. MPI Standards: Products shall comply with MPI standards indicated and shall be listed in its "MPI Approved Products Lists."

B. Material Compatibility:

1. Materials for use within each paint system shall be compatible with one another and substrates indicated, under conditions of service and application as demonstrated by manufacturer, based on testing and field experience.
2. For each coat in a paint system, products shall be recommended in writing by topcoat manufacturers for use in paint system and on substrate indicated.

C. Colors: Color to match existing on adjacent surfaces

PART 3 - EXECUTION

3.1 EXAMINATION

A. Examine substrates and conditions, with Applicator present, for compliance with requirements for maximum moisture content and other conditions affecting performance of the Work.

B. Maximum Moisture Content of Substrates: When measured with an electronic moisture meter as follows:

1. Concrete: 12 percent.
2. Wood: 15 percent.

C. Verify suitability of substrates, including surface conditions and compatibility, with existing finishes and primers.

D. Proceed with coating application only after unsatisfactory conditions have been corrected.

1. Application of coating indicates acceptance of surfaces and conditions.

3.2 PREPARATION

A. Comply with manufacturer's written instructions and recommendations in "MPI Architectural Painting Specification Manual" applicable to substrates and paint systems indicated.

B. Remove hardware, covers, plates, and similar items already in place that are removable and are not to be painted. If removal is impractical or impossible because of size or weight of item, provide surface-applied protection before surface preparation and painting.

1. After completing painting operations, use workers skilled in the trades involved to reinstall items that were removed. Remove surface-applied protection if any.

C. Clean substrates of substances that could impair bond of paints, including dust, dirt, oil, grease, and incompatible paints and encapsulants.

1. Remove incompatible primers and reprime substrate with compatible primers or apply tie coat as required to produce paint systems indicated.

D. Concrete Substrates: Remove release agents, curing compounds, efflorescence, and chalk. Do not paint surfaces if moisture content or alkalinity of surfaces to be painted exceeds that permitted in manufacturer's written instructions.

E. Steel Substrates: Remove rust, loose mill scale, and shop primer, if any. Clean using methods recommended in writing by paint manufacturer but not less than the following:

1. SSPC-SP 2.
2. SSPC-SP 3.
3. SSPC-SP 7/NACE No. 4.
4. SSPC-SP 11.

F. Wood Substrates:

1. Scrape and clean knots, and apply coat of knot sealer before applying primer.
2. Sand surfaces that will be exposed to view, and dust off.
3. Prime edges, ends, faces, undersides, and backsides of wood.
4. After priming, fill holes and imperfections in the finish surfaces with putty or plastic wood filler. Sand smooth when dried.

3.3 APPLICATION

A. Apply paints according to manufacturer's written instructions and to recommendations in "MPI Manual."

1. Use applicators and techniques suited for paint and substrate indicated.
2. Paint surfaces behind movable equipment and furniture same as similar exposed surfaces. Before final installation, paint surfaces behind permanently fixed equipment or furniture with prime coat only.
3. Paint front and backsides of access panels, removable or hinged covers, and similar hinged items to match exposed surfaces.
4. Do not paint over labels of independent testing agencies or equipment name, identification, performance rating, or nomenclature plates.
5. Primers specified in painting schedules may be omitted on items that are factory primed or factory finished if acceptable to topcoat manufacturers.

B. Tint each undercoat a lighter shade to facilitate identification of each coat if multiple coats of same material are to be applied. Tint undercoats to match color of topcoat, but provide sufficient difference in shade of undercoats to distinguish each separate coat.

C. If undercoats or other conditions show through topcoat, apply additional coats until cured film has a uniform paint finish, color, and appearance.

D. Apply paints to produce surface films without cloudiness, spotting, holidays, laps, brush marks, roller tracking, runs, sags, ropiness, or other surface imperfections. Cut in sharp lines and color breaks.

3.4 CLEANING AND PROTECTION

A. At end of each workday, remove rubbish, empty cans, rags, and other discarded materials from Project site.

B. After completing paint application, clean spattered surfaces. Remove spattered paints by washing, scraping, or other methods. Do not scratch or damage adjacent finished surfaces.

C. Protect work of other trades against damage from paint application. Correct damage to work of other trades by cleaning, repairing, replacing, and refinishing, as approved by Architect, and leave in an undamaged condition.

D. At completion of construction activities of other trades, touch up and restore damaged or defaced painted surfaces.

3.5 INTERIOR PAINTING SCHEDULE

A. Concrete Substrates, Nontraffic Surfaces:

1. Institutional Low-Odor/VOC Latex System **MPI INT 3.1M**:

a. Prime Coat: Primer sealer, interior, institutional low odor/VOC.

1) Latex Floor and Patio Enamel, #122, Benjamin Moore Company.

b. Topcoat: Latex, interior, institutional low odor/VOC, satin.

1) Latex Floor and Patio Enamel, #122, Benjamin Moore Company.

B. Steel Substrates:

1. Latex over Shop-Applied Quick-Drying Shop Primer System MPI INT 5.1X:

a. Prime Coat: Primer, quick dry, for shop application, MPI #275.

b. Intermediate Coat: Latex, interior, matching topcoat.

c. Topcoat: Latex, interior, gloss (MPI Gloss Level 6, except minimum gloss of 65 units at 60 degrees), MPI #114.

1) D.T.M. Acrylic Gloss Enamel, #P28, Benjamin Moore Company.

C. Wood Substrates: Wood trim and wood board paneling.

1. Institutional Low-Odor/VOC Latex System MPI INT 6.3V:

a. Prime Coat: Primer, latex, for interior wood, MPI #39.

1) Fresh Start Multipurpose Latex Primer, #NO23, Benjamin Moore Company

b. Intermediate Coat: Latex, interior, institutional low odor/VOC, matching topcoat.
c. Topcoat: Latex, interior, institutional low odor/VOC, flat , MPI #44.

1) Aura Waterborne Interior Paint, #524, Benjamin Moore Company

END OF SECTION 099123

SECTION 211313 - WET PIPE SPRINKLER SYSTEMS

PART 1 - GENERAL

1.1 RELATED DOCUMENTS

A. Drawings and general provisions of the Contract, including General and Supplementary Conditions and Division 1 Specification Sections, apply to this Section.

B. The following sections apply to the work of this section:

1. 283111 Fire Detection and Alarm Systems

1.2 SUMMARY

A. Scope: Provide modifications to the existing wet-pipe sprinkler system to accommodate new smoke control equipment, ready for operation.

B. The work includes designing and modifying an automatic wet pipe fire extinguishing sprinkler system for Ordinary Hazard II to afford complete fire protection coverage throughout the contract area.

C. Existing Sprinkler Equipment: Existing sprinkler equipment shall be maintained fully operational until the new equipment has been tested and accepted by the COTR and OSHEM fire protection engineer. When modifying the existing system and performing cut-ins, system shall be shut down for shortest period possibly. Contractor responsible for modifying the system shall remain on site at all times that the sprinkler system is disabled and shall not leave the building until system is placed back in service and fully operational.

D. Authority Having Jurisdiction: Any reference in the specifications or applicable codes to the "authority having jurisdiction" shall be interpreted to mean the OSHEM Fire Protection Engineer.

1.3 DEFINITIONS

A. COTR: Contracting Officer Technical Representative

B. FM: FM Global (Factory Mutual)

C. FPE: Fire Protection Engineer

D. Furnish: To supply the stated equipment or materials

E. Install: To set in position and connect or adjust for use

F. NFPA: National Fire Protection Association

G. NICET: National Institute for Certification in Engineering Technologies

H. OSHEM: Office of Safety Health and Environmental Management

I. Provide: To furnish and install the stated equipment or materials

J. UL: Underwriters Laboratories

1.4 SYSTEM DESCRIPTION:

A. The design shall conform to NFPA 13 and the requirements specified herein. Design of the automatic wet pipe sprinkler system shall be for Ordinary Hazard II occupancy. The design, equipment, materials, installation, workmanship, examination, inspection and testing shall be in strict accordance with NFPA 13, except as modified herein.

B. The system modifications shall include all materials, accessories, and equipment to provide a system complete and ready for use.

C. Design and provide each system area giving full consideration to blind spaces, piping, electrical equipment, duct work and other construction and equipment in accordance with detailed drawings to be submitted for approval.

D. Equipment for fire protection service shall be UL listed or FM approved for use in wet pipe sprinkler systems.

E. In the NFPA publications referred to herein, the advisory provisions shall be considered mandatory, as though the word "shall" had been substituted for "should," wherever it appears.

1.5 PERFORMANCE REQUIREMENTS

A. Water Distribution: Distribution shall be uniform throughout the area which it is assumed the sprinkler heads will open.

B. Location of Sprinkler Heads: Heads in relation to the ceiling and the spacing of sprinkler heads shall not exceed their listed area of coverage for Ordinary Hazard II. Uniformly space sprinklers on the branch piping. Locate sprinkler heads in a consistent pattern with ceiling grid, lights, and supply air diffusers.

C. Hydraulic Calculations: Hydraulic calculations will not be required. Contractor shall follow the pipe sizes indicated on the contract drawings and the existing sprinkler system pipe schedule.

1.6 SUBMITTALS

A. Partial submittals will not be acceptable. Any installation work performed prior to the approval of the submittal shall be at the Contractor’s own risk.

B. Before any work is commenced, submit manufacturer's data (with listing or approval) and complete sets of working drawings.

C. The OSHEM Fire Protection Engineer shall review and approve submittals.

D. Manufacturers' Data: Annotate descriptive data to show the specific model, type and size of each item the Contractor proposes to furnish. Include data for proper installation of each system including:

1. Pipe and fittings
2. Sprinkler heads
3. Pipe hangers and supports
4. Lubricating compound/PTFE tape.

E. Shop Drawings: Prepare working drawings on sheets not smaller than 24 in by 36 in (610 mm by 914 mm), in accordance with the requirements for "Working Plans" as specified in NFPA 13. As-Built (Record) Working Drawings: On a weekly basis, the Contractor Superintendent, in conjunction with the COTR, shall review and record as-built conditions on a set of drawings maintained at the job site. After completion, but before final acceptance of the work, furnish a complete set of as-built drawings for review and approval by OSHEM. Make all necessary corrections to the drawings and furnish four sets of as-built drawings for record purposes. All deviations from the approved shop drawings shall be highlighted on the as-built drawings; if required by OSHEM the Contractor shall also provide hydraulic calculations justifying deviations. The drawings shall not be smaller than 24 in by 36 in (610 mm by 914 mm) on reproducible sepia with title block similar to full size contract documents. Provide 1 compact disc containing CAD based drawings in DXF and PDF based format of all as-built drawings and schematics.

1.7 QUALITY ASSURANCE

A. The publications listed below form a part of this specification to the extent referenced. The publications are referred to in the text by the basic designation only. All publications listed below refer to the most current edition.

B. Manufacturers Qualifications

1. American Society for Testing and Materials (ASTM) Publications:

   a. A53 Pipe, Steel, Black and Hot Dipped, Zinc-Coated, Welded and Seamless

   b. A135 Welded and Seamless Steel Pipe

2. Factory Mutual System (FM) Publications

   a. Approval Guide

3. National Fire Protection Association (NFPA) Publications

   a. 13 Installation of Sprinkler Systems

   b. 70 National Electrical Code

   c. 72 National Fire Alarm Code

   d. 101 Life Safety Code

4. International Code Council (ICC)

   a. International Building Code

5. Underwriters Laboratories, Inc. (UL) Publications:

   a. Fire Protection Equipment Directory

C. Qualifications Of Installer:

1. Prior to installation, submit data for approval by OSHEM, showing that the Contractor has successfully installed automatic, wet pipe, fire extinguishing sprinkler systems of at least 200 sprinkler heads each, or there is a firm contractual agreement with a subcontractor having such required experience. These systems shall be the same type and design which have been retrofitted into existing museums and historical buildings as specified herein. The data shall include the names and locations of at least two installations where the Contractor, or the subcontractor referred to above, has installed such systems. The Contractor shall indicate the type and design of each system and certify that each system has performed satisfactorily in the manner intended for a period of not less than 18 months.

2. Design (including hydraulic calculations) shall be by a NICET Level III or IV Technician (in automatic sprinkler system design) or a Professional Engineer (P.E.), licensed in Fire Protection Engineering. Qualifications of the designer must be submitted to OSHEM for approval.

D. Service Organization: The Contractor shall furnish, to the COTR, evidence that there is an experienced and effective service organization which carries a stock of repair parts for the system in order to readily effect repairs throughout the warranty period. Should the Contractor fail to comply with the service requirements of this section, the Government will then have the option to make the necessary repairs and back charge the Contractor without any loss of warranty or guarantee as provided by the contract documents.

1.8 DELIVERY STORAGE AND HANDLING

A. Deliver products to project site in original, unopened packages with intact and legible manufacturers' labels identifying product and manufacturer, date of manufacture, and shelf life if applicable.

B. Store materials inside, under cover, above ground, and kept dry and protected from physical damage until ready for use. Remove from site and discard wet or damaged materials.

C. Automatic sprinklers must be kept in original packaging until they are installed. Loose carrying or storage is not permitted. Loose sprinklers shall be discarded immediately and replaced at Contractor's expense.

1.9 PROJECT CONDITIONS

A. The building is occupied by people and animals and the building must remain open and functional. for their own safety. Contractor shall utilize extreme caution and follow strict requirements contained in the specifications when working in the animal holding areas. Contractor will be restricted to specified work areas and time periods as described in the phased work plans and specifications. Contractor will not be permitted free access to animal holding areas and must complete work in compliance with phased work plans.

B. The Goal of this project is to modify the sprinkler system in the building in a means that prohibits any access to any components of the system by the animals housed in the building. To achieve this means, it may be necessary to install specific sprinkler system components outside of the prescriptive requirement of the installation standards or outside of the approval limitations of a specific system component. It is understood that this will only occur when no other solution exists to achieve full sprinkler coverage in accordance with the prescriptive requirements of the installation standards and approval listings. Where such a condition occurs, approval by the Smithsonian AHJ must first be obtained before proceeding with installation.

1.10 COORDINATION

A. Coordinate sprinkler head layout with reflected ceiling plan and all ceiling – mounted

equipment, including diffusers, lights, security cameras, fire alarm devices, exit signs, and other devices.

B. Coordinate major equipments and piping layouts with other trades to avoid obstructions and excessive changes in direction for piping.

1.11 WARRANTY

A. The Contractor shall guarantee labor, materials, and equipment provided under this contract against defects for a period of one year after the date of final acceptance of this work by the Government.

B. Final acceptance includes, but is not limited to, the receipt and OSHEM approval of, as-built drawings and operation and maintenance manuals.

PART 2 - PRODUCTS

2.1 ACCEPTABLE MANUFACTURERS

A. All products are subject to the following listed acceptable manufacturers. If the product is not addressed herein the product shall be from a US based manufacturer and listed for fire protection use.

B. All products shall be FM approved/ UL listed.

C. Fire Protection Valves and Drain Assemblies

1. Tyco Fire & Building Products
2. Victaulic
3. Stockham
4. Kennedy
5. Jenkins
6. Reliable Automatic Sprinkler Co.
7. Viking Corporation

D. Sprinklers

1. Sprinklers shall be equal to existing sprinklers within each work area.

2.2 ABOVEGROUND PIPING SYSTEMS

A. Provide fittings for changes in direction of piping and for all connections. Arrange piping so that it can be drained at the main riser. Make changes in piping sizes through standard tapered, reducing pipe fittings; the use of bushings will not be permitted. Perform welding in the shop; field welding will not be permitted.

B. Jointing compound for pipe threads shall be polytetrafluoroethylene (PTFE) pipe thread tape only; apply on male threads. Pipe dope may not be used.

C. Lubricant used on gaskets for mechanical fittings must be non-petroleum based and approved by OSHEM.

D. Run piping concealed in areas with suspended ceilings, except as noted on the drawings.

E. Sprinkler Pipe and Fittings: Provide in accordance with NFPA 13, except as modified herein. Steel piping shall be Schedule 40 per ASTM A53 for sizes less than 4 inches (101.6 mm) and Schedule 10 or 40 per ASTM A53 for sizes 4 inches (101.6 mm) and larger. ASTM A135, Schedule 40 piping may be used for pipe sizes less than 2 ½ inches (63.5 mm).

1. Standard Installation:

a. Nominal pipe sizes 4 inches or larger: Schedule 10 or 40 Pipe meeting ASTM A-53, A-135 or A-795 with factory- or field-formed, roll-grooved for Schedule 10 or 40 ends, or cut-grooved for Schedule 40 ends.

b. For connections between 4 inch and larger pipes the requirements are as follows.

1) Grooved pipe couplings and fittings for grooved pipe.

2) Outlet coupling with screwed connection for grooved pipe.

c. For connection between 4 inch and larger pipes to pipes smaller than 4 inches the requirement is as follows.

1) Welded outlet with screwed connection or threaded coupling or fittings.

d. Nominal pipe sizes smaller than 4-inches: Schedule 40 Pipe meeting ASTM A-53, A-135, and A-795 with factory- or field-formed threaded ends:

e. For connections to and between pipes less than 4 inches the requirement is as follows.

1) Threaded pipe couplings and fittings only.

F. Pressure ratings: Pressure ratings of all fittings and gaskets shall meet or exceed maximum working pressures available within the system.

G. Corrosion protection: All piping and hangers where exposed to the weather or installed in a corrosive atmosphere shall be protected against corrosion.

H. Pipe and Hanger Supports: Provide pipe supports, hangers, and clamps conforming to NFPA

13 and listed by UL or approved by FM. Provide galvanized supports, hangers, and clamps for all galvanized piping.

I. Joint Construction

a. Branch outlet mechanical fittings and clamp type fittings are not permitted.

b. Procedures for welding outlets shall be in strict conformance with the welding requirements of NFPA 13, including submission of welding certifications. Welding shall not be performed on site.

c. Threaded Joints: Comply with NFPA 13 for pipe thickness and threads. Do not thread pipe with wall thickness less than Schedule 40.

d. Grooved Joints and Fittings: Assemble joints and fittings with listed coupling and gasket, lubricant, and bolts from same manufacturer. Fittings and attached couplings shall be from the same manufacturer.

e. Steel Pipe: Square-cut or roll-groove piping as indicated. Use grooved-end fittings and rigid, grooved-end-pipe couplings, unless otherwise indicated.

f. If the galvanized coating on piping is found to be chipped or cracked upon grooving of joint, two coats of liquid galvanizing material shall be applied to groove. The first coat shall be thoroughly dry prior to applying the second coat.

J. Rubber-gasketed, grooved-end pipe and fittings with mechanical couplings shall only be permitted in pipe sizes 4 inches (101.6 mm) and larger.

K. Use of restriction orifices, reducing flanges, unions, and plain-end fittings will not be permitted.

L. The corrosion resistance ratio of pipe and fitting method shall not be less than 0.95.

M. Pipe Hangers and Supports: Provide in accordance with NFPA 13.

N. Drains: Provide drain piping to discharge at safe points outside the building or to sight cones attached to drains of adequate size to readily receive the full flow from each drain under maximum pressure. All drain piping is to be galvanized. Provide auxiliary drains as required by NFPA 13. Splash guards are to be provided where necessary at discharge outlets.

O. Pipe Sleeves and Seals. Provide where conduit or piping passes through walls, floors, roofs and partitions. Provide clearance between exterior of piping and interior of sleeve in accordance with NFPA 13. See Section 078413 Penetration Firestopping, for sleeves and seals through fire-rated assemblies. Secure sleeves in proper position and location during construction. Provide sleeves of sufficient length to pass through the entire thickness of walls, floors, roofs, and partitions.

1. Sleeves in Masonry and Concrete Walls, Floors, and Roofs: Provide ASTM A53, Schedule 40, zinc-coated steel pipe sleeves. Sleeves in floors shall project 4 inches (101.6 mm) above finished floors to prevent seepage.

2. Sleeves in Partitions and Other than Masonry and Concrete Walls, Floors and Roofs: Sleeves shall be constructed from either zinc-coated schedule 40 steel pipe or zinc-coated 26 gauge steel sheet.

P. Escutcheon Plates: Provide one piece or split-hinge-type metal plates for piping passing through floor, walls, and ceilings in exposed and concealed areas. Provide chromium-plated or color-coordinated metal plates where pipe passes through finished ceilings. Securely anchor plates in proper position. Provide sprinkler escutcheon plates to match sprinkler head finish.

2.3 SPRINKLER HEADS

A. Provide quick response sprinklers in offices and all other areas where their use is listed or approved. Heads located within the air streams of unit heaters or other heat-emitting equipment or skylights shall be selected for proper temperature rating.

B. The response characteristics of the new sprinklers shall match those existing in the space.

C. Heads shall have a nominal ½ inch orifice. Corrosion-resistant sprinkler heads shall be installed where they are exposed to the weather, moisture or corrosive vapors. Heads installed where they might receive mechanical injury or are less than 7 feet above the floor level, shall be protected with approved guards in accordance with NFPA 13. Provide finish as indicated.

2.4 CABINET

A. Furnish and install a metal cabinet containing a stock of spare sprinkler heads of all types and ratings installed. The cabinet shall be located near the control valve and where the temperature will not exceed 100ºF(37.8ºC) The number of spare sprinkler heads shall be as required by NFPA 13

PART 3 - EXECUTION

3.1 INSTALLATION

A. Equipment, materials, installation, workmanship, examination, inspection and testing shall be in accordance with NFPA 13, except as modified herein. Install piping straight and true to bear evenly on hangers and supports. Install piping as close to the ceiling as possible, without interfering with other equipment and construction. Nipples shall be perpendicular to ceilings.

B. Accurately align sprinkler heads in suspended ceilings symmetrically with diffusers, lights, and ceiling tiles. Install sprinkler heads in the center of the ceiling tiles unless directed otherwise.

C. Keep the interior and ends of all piping affected by Contractor's operations thoroughly clean of water and foreign matter by means of plugs or other approved methods. Inspect piping before placing into position. All pipe, fittings, and gaskets are to be cleaned of oil prior to installation.

3.2 FIELD CHANGES

A. Do not make field changes in the piping layout, pipe sizes, or type of equipment, without the prior approval of the COTR.

3.3 CONNECTIONS TO EXISTING SPRINKLER SYSTEM

A. Connection to the existing sprinkler system shall be done only after successfully testing new

piping. Connections shall be as shown on the drawings. The COTR shall be notified at least 4 days prior to interruption of sprinkler protection.

B. A schedule of any interruption of service shall be provided to the COTR and approval received before any service is interrupted. In no case shall the existing sprinkler system be shut off during periods other than normal Contractor construction hours.

3.4 FIELD PAINTING

A. Painting shall be per Section 099000, Painting, except as modified herein. Where the existing sprinkler pipe is painted in finished areas, the steel piping systems including piping, pipe sleeves, conduit, hangers, miscellaneous metal work and accessories shall be cleaned, pre-treated, primed and painted to match exiting painted pipe. Coatings shall be applied only to clean, dry surfaces using clean brushes. Surfaces shall be cleaned to remove all dust, dirt, rust and loose mill scale. All painting shall be performed off-site. Painting shall not be performed inside the building.

B. Immediately after cleaning, provide the metal surfaces with one coat of primer, applied to a minimum dry film thickness of 1.0 to 1.5 mil. Due care shall be exercised to avoid the painting of sprinkler heads or protective devices or allowing paint to drip or splatter on any equipment, artifacts, building structures, and floors. Materials which are used to protect sprinkler heads while painting is in progress shall be removed upon completion of painting.

C. The Contractor shall remove all sprinkler heads which are painted and provide new, clean sprinkler heads of the proper type at his own expense. In addition to the primer, surfaces shall receive the following:

D. Above-Ground Piping Systems in Unfinished Areas: Unfinished areas are defined as attic spaces, mechanical equipment spaces, spaces above suspended ceilings, crawl spaces, pipe chases, and spaces where walls or ceilings are not painted or not constructed of a pre-finished material. Provide 2 inch wide red enamel or self adhering plastic bands on sprinkler piping, spaced at a maximum of 10 ft intervals.

E. Above-Ground Piping Systems in Other Areas: Provide primed surfaces with two coats of paint to match adjacent surfaces, except valves and operating accessories shall receive one coat of red enamel. Provide piping with 2 inch wide red enamel bands or self-adhering red plastic bands spaced at a maximum of 10 ft intervals.

F. All other coatings (e.g., zinc for galvanized pipe) shall be in compliance with NFPA 13.

3.5 FIELD TESTING AND FLUSHING

A. All testing shall be scheduled with the COTR.

B. At the discretion of the OSHEM Fire Protection Engineer, an air pressure test may be required prior to filling the system with water. The test shall be conducted by raising the air pressure in the system to 40 psi and allowing it to stand for 24 hours. There shall be no loss of air pressure

greater than 1.5 psi over the 24 hour period.

C. Hydrostatic tests shall be conducted at the greater of 200 psi or the normal system pressure plus 50 psi for a 2 hour period with no leakage or reduction in gage pressure. Hydrostatic test pressures shall not be maintained on the system overnight. Flush piping with potable water in accordance with NFPA 13.

D. Preliminary Tests and Procedures: In areas where piping will be concealed by ceilings, walls, or other construction before the system is complete and ready for final testing, the preliminary hydrostatic test shall be conducted prior to piping being concealed. This test shall be witnessed by the COTR and the OSHEM Fire Protection Engineer. When all tests and procedures are completed and corrections made, submit a signed and dated certificate, similar to that specified in NFPA 13, with a request for formal inspection and tests.

E. Formal Inspection and Tests: At this time, all piping sprinklers, and other system components shall be in-place and all adjustments to the system completed. The OSHEM Fire Protection Engineer shall be notified by the COTR and shall witness all tests and approve all systems before they are accepted. Submit a request for a formal inspection at least five working days prior to the date the inspection is to take place. A competent representative of the sprinkler installer shall be present during testing and inspection. As-built drawings shall be on-site for the inspection. At this inspection, the system shall be hydrostatically tested. Any or all of the required tests shall be conducted by the Contractor at his own expense and additional tests made until it has been demonstrated that the systems comply with all contract requirements. The Contractor shall furnish all appliances, equipment, instruments, connecting devices and personnel for the tests. Any costs incurred by the SI for repeat tests, due to the failure of the Contractor to adequately demonstrate that the system complies with the contract requirements, shall be borne by the Contractor.

F. CONNECTIONS TO EXISTING PIPING: During air and hydrostatic testing, the Contractor shall test new piping prior to connecting to the existing system. If the Contractor chooses to test the new piping while it is connected to existing piping or valves, the Contractor shall assume responsibility for all piping and equipment which is pressurized, as well as any damage caused by the failure of existing or new sprinkler systems. The SI accepts no responsibility for existing valves' performance to withstand hydrostatic pressure testing.

END OF SECTION 211313

SECTION 22 0500 – COMMON WORK RESULTS FOR PLUMBING

PART 1 - GENERAL

1.1 RELATED DOCUMENTS

A. Drawings and general provisions of the Contract, including General and Supplementary Conditions and Division 01 Specification Sections, apply to this Section.

1.2 SUMMARY

A. This Section includes references to Division 23 Sections for plumbing common materials and methods.

B. Related Sections include the following:

1. Refer to Division 23 Section "Common Work Results for Mechanical" for basic materials and methods.
2. Refer to Division 23 Section "Hangers and Supports for Mechanical Piping and Equipment" for hangers and supports requirements.
3. Refer to Division 23 Section "Identification for Mechanical" for identification requirements.
4. Refer to Division 23 Section "Mechanical Insulation" for insulation requirements.

PART 2 - PRODUCTS (NOT USED)

PART 3 - EXECUTION (NOT USED)

END OF SECTION 22 0500

SECTION 22 1413 - FACILITY STORM DRAINAGE PIPING

PART 1 - GENERAL

1.1 RELATED DOCUMENTS

A. Drawings and general provisions of the Contract, including General and Supplementary Conditions and Division 01 Specification Sections, apply to this Section.

1.2 SUMMARY

A. Section Includes:

1. Pipe, tube, and fittings.
2. Specialty pipe fittings.

B. Related Sections:

1. Section 22 1423 "Storm Drainage Piping Specialties" for storm water system specialties.

1.3 PERFORMANCE REQUIREMENTS

A. Components and installation shall be capable of withstanding the following minimum working pressure unless otherwise indicated:

1. Storm Drainage Piping: 10-foot head of water (30 kPa).

1.4 ACTION SUBMITTALS

A. Product Data: For each type of product indicated.

1.5 QUALITY ASSURANCE

A. Piping materials shall bear label, stamp, or other markings of specified testing agency.

1.6 PROJECT CONDITIONS

A. Interruption of Existing Storm-Drainage Service: Do not interrupt service to facilities occupied by Owner or others unless permitted under the following conditions and then only after arranging to provide temporary service according to requirements indicated:

1. Notify COTR no fewer than seven days in advance of proposed interruption of storm-drainage service.
2. Do not proceed with interruption of storm-drainage service without COTR's written permission.

PART 2 - PRODUCTS

2.1 PIPING MATERIALS

A. Comply with requirements in "Piping Schedule" Article for applications of pipe, tube, fitting materials, and joining methods for specific services, service locations, and pipe sizes.

2.2 HUB-AND-SPIGOT, CAST-IRON SOIL PIPE AND FITTINGS

A. Pipe and Fittings: ASTM A 74, Service class.

B. Gaskets: ASTM C 564, rubber.

C. Calking Materials: ASTM B 29, pure lead and oakum or hemp fiber.

2.3 HUBLESS, CAST-IRON SOIL PIPE AND FITTINGS

A. Pipe and Fittings: ASTM A 888 or CISPI 301.

B. Shielded Couplings: ASTM C 1277 assembly of metal housing, corrosion-resistant fasteners, and rubber sleeve with integral, center pipe stop.

1. Heavy-Duty, Shielded, Stainless-Steel Couplings: Coupling standard FM 1680, Class 1, ASTM C-1540, with stainless-steel shield, stainless-steel bands and tightening devices, and ASTM C 564, rubber sleeve.

a. Manufacturers:
1) Husky; Model SD 4000.
2) Clamp-All Corp.
3) Tyler Pipe; Soil Pipe Div.

b. Shield and Band Requirements:
1) NPS 1-1/2 to NPS 4: 3-inch wide shield with 4 bands.
2) NPS 5 to NPS 10: 4-inch wide with 6 bands.

PART 3 - EXECUTION

3.1 PIPING INSTALLATION

A. Drawing plans, schematics, and diagrams indicate general location and arrangement of piping systems. Indicated locations and arrangements were used to size pipe and calculate friction loss, expansion, pump sizing, and other design considerations. Install piping as indicated unless deviations from layout are approved on coordination drawings.

B. Install piping indicated to be exposed and piping in equipment rooms and service areas at right angles or parallel to building walls. Diagonal runs are prohibited unless specifically indicated otherwise.

C. Install piping above accessible ceilings to allow sufficient space for ceiling panel removal.

D. Install piping at indicated slopes.

E. Install piping free of sags and bends.

F. Install fittings for changes in direction and branch connections.

G. Install piping to allow application of insulation.

H. Make changes in direction for storm drainage piping using appropriate branches, bends, and long-sweep bends. Do not change direction of flow more than 90 degrees. Use proper size of standard increasers and reducers if pipes of different sizes are connected. Reducing size of drainage piping in direction of flow is prohibited.

I. Install storm drainage piping at the following minimum slopes unless otherwise indicated:

1. Building Storm Drain: 1 percent downward in direction of flow .
2. Horizontal Storm-Drainage Piping: 2 percent downward in direction of flow.

J. Install cast-iron soil piping according to CISPI's "Cast Iron Soil Pipe and Fittings Handbook," Chapter IV, "Installation of Cast Iron Soil Pipe and Fittings."

K. Install steel piping according to applicable plumbing code.

L. Do not enclose, cover, or put piping into operation until it is inspected and approved by authorities having jurisdiction.

M. Install sleeves for piping penetrations of walls, ceilings, and floors. Comply with requirements for sleeves specified in Section 23 0500 "Common Work Results for Mechanical."

N. Install escutcheons for piping penetrations of walls, ceilings, and floors. Comply with requirements for escutcheons specified in Section 23 0500 "Common Work Results for Mechanical."

3.2 JOINT CONSTRUCTION

A. Refer to Section 23 0500 “Common Work Results for Mechanical.”

B. Hub-and-Spigot, Cast-Iron Soil Piping Gasketed Joints: Join according to CISPI's "Cast Iron Soil Pipe and Fittings Handbook" for compression joints.

3.3 HANGER AND SUPPORT INSTALLATION

A. Refer to Division 23 Section "Hangers and Supports for Mechanical Piping and Equipment" for pipe hanger and support devices. Install the following:

1. Vertical Piping: MSS Type 8 or Type 42, clamps.
2. Individual, Straight, Horizontal Piping Runs: According to the following:

   a. 100 Feet and Less: MSS Type 1, adjustable, steel clevis hangers.

3. Base of Vertical Piping: MSS Type 52, spring hangers.

B. Install supports according to Division 23 Section "Hangers and Supports for Mechanical Piping and Equipment."

C. Support vertical piping and tubing at base and at each floor.

D. Rod diameter may be reduced 1 size for double-rod hangers, with 3/8-inch minimum rods.

E. Install hangers for cast-iron soil piping with the following maximum horizontal spacing and minimum rod diameters:

1. NPS 1-1/2 and NPS 2: 60 inches with 3/8-inch rod.
2. NPS 3: 60 inches with 1/2-inch rod.
3. NPS 4 and NPS 5: 60 inches with 5/8-inch rod.
4. NPS 6: 60 inches with 3/4-inch rod.
5. Spacing for 10-foot lengths may be increased to 10 feet. Spacing for fittings is limited to 60 inches.

F. Install supports for vertical cast-iron soil piping every 15 feet.

3.4 CONNECTIONS

A. Drawings indicate general arrangement of piping, fittings, and specialties.

B. Connect interior storm drainage piping to exterior storm drainage piping. Use transition fitting to join dissimilar piping materials.

3.5 IDENTIFICATION

A. Identify exposed storm drainage piping. Comply with requirements for identification specified in Section 23 0553 "Identification for Mechanical."

3.6 FIELD QUALITY CONTROL

A. During installation, notify authorities having jurisdiction at least 24 hours before inspection must be made. Perform tests specified below in presence of authorities having jurisdiction.

1. Final Inspection: Arrange for final inspection by authorities having jurisdiction to observe tests specified below and to ensure compliance with requirements.

B. Re-inspection: If authorities having jurisdiction find that piping will not pass test or inspection, make required corrections and arrange for re-inspection.

C. Reports: Prepare inspection reports and have them signed by authorities having jurisdiction.

D. Test storm drainage piping according to procedures of authorities having jurisdiction or, in absence of published procedures, as follows:

1. Test for leaks and defects in new piping and parts of existing piping that have been altered, extended, or repaired. If testing is performed in segments, submit separate report for each test, complete with diagram of portion of piping tested.

2. Leave uncovered and unconcealed new, altered, extended, or replaced storm drainage piping until it has been tested and approved. Expose work that was covered or concealed before it was tested.
3. Test Procedure: Test storm drainage piping on completion of roughing-in. Close openings in piping system and fill with water to point of overflow, but not less than 10-foot head of water (30 kPa). From 15 minutes before inspection starts until completion of inspection, water level must not drop. Inspect joints for leaks.
4. Repair leaks and defects with new materials and retest piping, or portion thereof, until satisfactory results are obtained.
5. Prepare reports for tests and required corrective action.

3.7 CLEANING

A. Clean interior of piping. Remove dirt and debris as work progresses.

B. Protect drains during remainder of construction period to avoid clogging with dirt and debris and to prevent damage from traffic and construction work.

C. Place plugs in ends of uncompleted piping at end of day and when work stops.

3.8 PIPING SCHEDULE

A. Aboveground storm drainage piping NPS 6 (DN 150) and smaller shall be any of the following:

1. Service class, cast-iron soil pipe and fittings; gaskets; and gasketed joints.
2. Hubless, cast-iron soil pipe and fittings; heavy-duty, hubless-piping couplings; and coupled joints.

END OF SECTION 22 1413

SECTION 22 1423 - STORM DRAINAGE PIPING SPECIALTIES

PART 1 - GENERAL

1.1 RELATED DOCUMENTS

A. Drawings and general provisions of the Contract, including General and Supplementary Conditions and Division 01 Specification Sections, apply to this Section.

1.2 SUMMARY

A. Section Includes:

1. Cleanouts.

1.3 ACTION SUBMITTALS

A. Product Data: For each type of product indicated.

1.4 QUALITY ASSURANCE

A. Drainage piping specialties shall bear label, stamp, or other markings of specified testing agency.

PART 2 - PRODUCTS

2.1 CLEANOUTS

A. Exposed Cleanouts: Comply with ASME A112.36.2M.

1. Application: For installation in exposed piping.
2. Manufacturers:

   a. Smith, Jay R. Mfg. Co., Model 4470T.
   b. Josam Co.
   c. Tyler Pipe, Wade Div.
   d. Watts Industries, Inc., Drainage Products Div.
   e. MIFAB.

3. Closure: Brass plug with straight threads and gasket, round brass plug with threads, and countersunk opening.

PART 3 - EXECUTION

3.1 INSTALLATION

A. Install cleanouts in aboveground piping and building drain piping according to the following instructions unless otherwise indicated:

1. Use cleanouts the same size as drainage piping up to NPS 4 (DN 100). Use NPS 4 (DN 100) for larger drainage piping unless larger cleanout is indicated.
2. Locate cleanouts at each change in direction of piping greater than 45 degrees.
3. Locate cleanouts at minimum intervals of 50 feet (15 m) for piping NPS 4 (DN 100) and smaller and 100 feet (30 m) for larger piping.
4. Locate cleanouts at base of each vertical soil and waste stack.

3.2 CONNECTIONS

A. Comply with requirements for piping specified in Section 221413 "Facility Storm Drainage Piping." Drawings indicate general arrangement of piping, fittings, and specialties.

3.3 PROTECTION

A. Protect drains during remainder of construction period to avoid clogging with dirt or debris and to prevent damage from traffic or construction work.

B. Place plugs in ends of uncompleted piping at end of each day or when work stops.

END OF SECTION 22 1423

SECTION 23 0500 - COMMON WORK RESULTS FOR MECHANICAL

PART 1 - GENERAL

1.1 RELATED DOCUMENTS

A. Drawings and general provisions of the Contract, including General and Supplementary Conditions and Division 01 Specification Sections, apply to this Section.

1.2 SUMMARY

A. This Section includes the following:

1. General and execution requirements common to other Division 22 and 23 Sections.
2. Piping installation instructions common to piping systems.
3. Sleeves.
4. Equipment product and installation requirements common to equipment sections.
5. Painting and finishing.
6. Supports and anchorages.

1.3 DEFINITIONS

A. Finished Spaces: Spaces other than mechanical and electrical equipment rooms, furred spaces, pipe and duct shafts, unheated spaces immediately below roof, spaces above ceilings, unexcavated spaces, crawlspaces, and tunnels.

B. Exposed, Interior Installations: Exposed to view indoors. Examples include finished occupied spaces, mechanical and electrical equipment rooms, and accessible shafts.

C. Exposed, Exterior Installations: Exposed to view outdoors or subject to outdoor ambient temperatures and weather conditions. Examples include rooftop locations and at grade locations.

D. Concealed, Interior Installations: Concealed from view and protected from physical contact by building occupants. Examples include above ceilings and in duct shafts.

E. Concealed, Exterior Installations: Concealed from view and protected from weather conditions and physical contact by building occupants but subject to outdoor ambient temperatures. Examples include installations within unheated shelters.

F. Conditioned Space: Finished spaces and exposed interior spaces that are air conditioned. Examples include offices, corridors, etc., that are served by air conditioning equipment. Return-air plenums are not conditioned space.

G. K-Factor: Number of British thermal units of heat transmitted per square foot per degree Fahrenheit temperature difference through a material with flat, parallel sides one inch apart.

H. The following are industry abbreviations for plastic materials:

1. ABS: Acrylonitrile-butadiene-styrene plastic.
2. CPVC: Chlorinated polyvinyl chloride plastic.
3. PE: Polyethylene plastic.
4. PVC: Polyvinyl chloride plastic.

I. The following are industry abbreviations for rubber materials:

1. EPDM: Ethylene-propylene-diene terpolymer rubber.
2. NBR: Acrylonitrile-butadiene rubber.

1.4 SUBMITTALS

A. Samples, drawings, specifications, catalogs, etc., submitted for approval shall be properly labeled indicating specific service for which material or equipment is to be used.

B. Shop Drawings:

1. Manufacturers List: Submit within 15 days after award of the Contract.
   a. List of proposed manufacturers of material and equipment.
      1) If, prior to the expiration of the fifteen (15) day period or any duly authorized extension thereof, the Contractor fails to submit a schedule of acceptable material or equipment covering the items, the Architect will select the manufacturer; such selection shall be final and binding upon the Contractor as a condition of the contract.
      2) Rejected manufacturers shall be resubmitted within 15 days or the Architect will select the materials and equipment manufacturers.
   b. After receiving approval of equipment manufacturers and prior to delivery of material to the job site, submit for approval drawings or cuts showing construction size, arrangement, operating clearances, performance characteristics and capacity of materials and equipment. Each item of equipment proposed shall be a standard catalog product of the approved manufacturer.

C. Operation and Maintenance Data:

1. Operation and maintenance manuals and record product data as specified in Division 01, Section “Project Closeout Requirements”.
2. Two complete bound sets of approved submittals for items of equipment utilized on the project. Manufacturers' advertising literature or catalogs will not be acceptable for operating and maintenance instructions. Refer to Division 01 Section “Project Closeout Requirements”.

D. Record Documents:

1. See Division 01, Section “Project Closeout Requirements” for general requirements.
2. Carefully record the actual locations of each piece of concealed equipment, control devices, pipe, valves, ducts, terminal units, etc., including dimensions to locate underground work, and work when different from the contract drawings.

1.5 QUALITY ASSURANCE

A. Steel Support Welding: Qualify processes and operators according to AWS D1.1, "Structural Welding Code--Steel."

B. Steel Pipe Welding: Qualify processes and operators according to ASME Boiler and Pressure Vessel Code: Section IX, "Welding and Brazing Qualifications."

1. Comply with provisions in ASME B31 Series, "Code for Pressure Piping."
2. Certify that each welder has passed AWS qualification tests for welding processes involved and that certification is current.

C. Electrical Characteristics for Mechanical Equipment: Equipment of higher electrical characteristics may be furnished provided such proposed equipment is approved in writing and connecting electrical services, circuit breakers, and conduit sizes are appropriately modified. If minimum energy ratings or efficiencies are specified, equipment shall comply with requirements.

D. Give necessary notices and obtain required permits. Pay fees and other costs, including utility connections or extensions in connection with the work. File necessary plans, prepare documents and obtain necessary approvals of governmental agencies having jurisdiction. Obtain required certificates of inspection and deliver same to the Architect before request for acceptance and final payment for the work.

E. Materials furnished and work installed shall comply with the latest issue of the codes, rules, and regulations.

F. HVAC Installer Qualifications:

1. Installer shall be a District of Columbia-licensed HVACR Master or Master Restricted contractor who is qualified in the areas of work included in the Project.
2. The successful contractor shall agree to employ only individuals who hold valid licenses issued by the HVACR Board of the Department of Labor, Licensing and Regulation to provide, or assist in providing, heating ventilating, air conditioning, or refrigerating system installation or service required for the project.
3. If the successful contractor subcontracts any or all of the heating, ventilating, air conditioning, or refrigerating system installation or service required for a project, the subcontractor must possess the appropriate license required and issued by the HVACR Board.
4. All heating, ventilating, air conditioning, and refrigerating system subcontractors shall consistently use only individuals who hold the appropriate licenses issued by the HVACR Board to provide or assist in providing heating, ventilating, air conditioning, and refrigerating system installation or service required for a project.

1.6 DELIVERY, STORAGE, AND HANDLING

A. Deliver pipes and tubes with factory-applied end caps. Maintain end caps through shipping, storage, and handling to prevent pipe end damage and to prevent entrance of dirt, debris, and moisture.

B. Proper and suitable tools, equipment and appliances for the safe and convenient handling and placing of materials and equipment shall be used. During loading, unloading, and placing, care shall be taken in handling the equipment and materials so that no equipment or materials, including COTR furnished, are damaged.

C. Mechanical equipment delivered to the job site shall be stored under roof or other approved covering, on pedestals above the ground. Enclosures for equipment shall be weatherproof. Any motors involved in the work that are not totally enclosed and electrical/electronic components shall be stored in a heated area with a minimum temperature of 50 deg. F. Valves shall be stored under roof on wood pedestals above ground. Pipe for project use shall be stored above grade and in such a manner to prevent entrance of foreign materials. Pipe shall be fitted with end caps or seals to prevent moisture and debris from entering pipe. Insulation shall be stored under roof or in trailers, adequately protected from the weather. Follow written instructions and recommendations of the manufacturer and requirements of the Architect in lubrication, protection and maintenance of equipment during storage.

D. If materials or equipment are found to be in poor condition at the time of being installed, the Architect may, at his discretion, order the Contractor to furnish and install new equipment or materials at no cost to the COTR.

1.7 COORDINATION

A. Arrange for pipe spaces, chases, slots, and openings in building structure during progress of construction, to allow for mechanical installations.

B. Coordinate installation of required supporting devices and other structural components as they are constructed.

C. Coordinate requirements for access panels and doors for mechanical items requiring access that are concealed behind finished surfaces. Access panels and doors are specified in Division 08 Section "Access Doors and Frames."

1.8 DRAWINGS

A. The contract drawings are diagrammatic and indicate the general arrangements of systems and work included in the Contract. Do not scale the drawings. Consult the architectural and structural drawings and details for exact location of structure and equipment; where same are not precisely located, obtain this information prior to start of work.

B. Layout of equipment indicated on drawings shall be checked and compared against drawings of trades, and exact locations and clearances for servicing determined using approved shop drawings of such equipment. Where the equipment furnished differs in physical character from that specified or indicated or where physical interference occurs, consult with Architect as to proper location of equipment. Prepare and submit for approval dated and dimensioned drawings correcting such interference's.

C. Although the location of materials and equipment may be shown on the drawings in a certain place, the construction may develop conditions that render this location inaccessible or impractical. In such cases, before fabricating and installing the work, the Contractor shall call the condition to the attention of the Architect for direction. When requested by the Architect a

detailed drawing of the proposed departure due to field conditions, or their causes, shall be submitted by the Contractor for approval. The Architect shall make final written decisions as to the conditions, which require the changing of work.

1.9 TEMPORARY FIRE PROTECTION

A. See Division 01 Section “Temporary Facilities and Controls” for general requirements.

B. As minimum, one five-pound CO_2 ABC type extinguisher shall be provided with each work crew.

1.10 SEQUENCING AND SCHEDULING

A. See Division 01 Section “Summary of Work” for general requirements.

1.11 ABBREVIATED LANGUAGE

A. Singular Number: Where any device or part of equipment is herein referred to in the singular number, such as "valve", such reference applies to as many such devices as are required to complete the installation, shown, implied or otherwise, as indicated on the drawings.

PART 2 - PRODUCTS

2.1 MANUFACTURERS

A. In other Part 2 articles where subparagraph titles below introduce lists, the following requirements apply for product selection:

1. Manufacturers: Subject to compliance with requirements, provide products by the manufacturers specified.

2.2 SLEEVES

A. Galvanized-Steel-Sheet Sleeves: 0.0239-inch minimum thickness; round tube closed with welded longitudinal joint.

B. Galvanized-Steel-Pipe Sleeves: ASTM A 53/A 53M, Type E, Grade B, Schedule 40, zinc coated, with plain ends.

C. Cast-Iron Wall Pipes: Cast or fabricated of cast or ductile iron and equivalent to ductile-iron pressure pipe, with plain ends and integral waterstop unless otherwise indicated.

D. Galvanized-Steel Wall Pipes: ASTM A 53/A 53M, Schedule 40, with plain ends and welded steel collar; zinc coated.

2.3 EQUIPMENT – COMMON REQUIREMENTS

A. Motors:

1. Motors are specified in Division 23 Section "Common Motor Requirements for HVAC Equipment."
2. Select the motor of a capacity needed to operate the equipment at the specified mid-position operating condition, and so that they have a nameplate rating of not less than 10 percent greater than the total of actual fan brake horsepower and drive loss at specified capacity. Where non-overloading of the motors is specified, select the motor capacity rating at closed position of the motor sheave. In no case shall motors be a smaller size than those scheduled.

B. Motor Starting Equipment:

1. Unless otherwise specified, motor control centers, starters, disconnect switches, combination starters and disconnect switches and variable frequency controllers shall be provided by the Division 26 Contractor, except for packaged equipment as specified under this Division.
2. Magnetic motor starters and combination starters, which are integral part of the equipment, shall be furnished by the Division 22 and 23 Contractors. Refer to Division 26 Section "Enclosed Controllers" for requirements.

2.4 PACKING MATERIAL FOR PENETRATIONS

A. Mineral fiber; non-combustible; resistant to water, mildew, and vermin. Expanding resilient foams manufactured for this purpose are an acceptable alternative only if the material density is at least 3.0 pounds per cubic foot.

PART 3 - EXECUTION

3.1 MECHANICAL - COMMON REQUIREMENTS

A. Refer to Division 01 Sections for general requirements.

B. Workmanship:

1. Furnish the services of an experienced full time field superintendent who shall be constantly in charge of the installation of the work provided under this Division. Superintendent shall have demonstrated experience with projects of comparable size and complexity and shall be approved by the Architect.
2. The quality of workmanship required in the execution of the work shall be the finest and highest obtainable, working with the materials specified. Workmanship shall be satisfactory to the Architect.

C. Surveys And Measurements:

1. Base measurements, both horizontal and vertical, from established benchmarks. Work shall agree with these established lines and levels. Verify measurements at site and check correctness of same as related to the work. Verify locations of existing work and utilities and inverts of same prior to the start of any systems shown connecting to same.
2. Should the Contractor discover any discrepancy between actual measurements or conditions, and those indicated which prevent following good practice or the intent of the drawings and specifications, he shall notify the Construction Manager and shall not proceed with his work until he has received instruction from the Construction Manager.

D. Cutting And Patching: Cutting and patching of building materials shall be performed in a neat and workmanlike manner. Surfaces, which are damaged by the Contractor, shall be repaired or provided with new materials. Patching and materials shall be done with materials and methods similar to adjacent work, subject to approval of the Architect. Structural members shall not be cut or penetrated unless indicated on the drawings and verified in the field with the Construction Manager. Holes cut through concrete and/or masonry to accommodate work under this Division shall be cut by reciprocating or rotary non-percussive methods.

E. Accessibility:

1. Locate equipment that must be serviced, operated or maintained, in fully accessible positions. Equipment shall include, but not be limited to, terminal units, coils, valves, motors, controllers, ATC dampers, drain points, cleanouts, etc.
2. Where required or where directed, provide access doors. Locate equipment and associated access doors in accordance with the architectural reflected ceiling plan drawings. Doors installed in fire rated walls or shafts shall be labeled and shall match rating of the construction. Doors shall be sufficient size to allow access to components, except minimum size shall be 12" x 16". Where equipment requires access to various parts, such as air terminal units require access to the controller, valve and piping appurtenances for the reheat coil, locate appurtenances requiring access such that all devices can be maintained from single door. Access doors are specified in Division 08 Section “Access Doors and Frames”.
3. The Contractor at no expense to the COTR shall rework equipment deemed inaccessible by the Architect.
4. Refer to Division 23 Section “Air Duct Accessories” for access doors installed in ductwork.

F. Flashing:

1. See Division 07 sections.

3.2 PIPING SYSTEMS - COMMON REQUIREMENTS

A. Install piping according to the following requirements and Division 22 Sections specifying piping systems.

B. Install piping to allow application of insulation, if applicable.

C. Install sleeves for pipes passing through penetrations in floors, partitions, roofs, and walls.

1. Install sleeves in concrete and masonry walls.
   a. Cut sleeves to length for mounting flush with both surfaces.
   b. Install sleeves that are large enough to provide 1/4-inch annular clear space between sleeve and pipe or pipe insulation.
   c. Using grout, seal the space outside of sleeves in walls.
   d. Seal annular space between sleeve and piping or piping insulation; use joint sealants appropriate for size, depth, and location of joint. Comply with requirements for sealants specified in Division 07 Section "Joint Sealants."
2. Install sleeves for pipes passing through interior partitions.
   a. Cut sleeves to length for mounting flush with both surfaces.
   b. Install sleeves that are large enough to provide 1/4-inch annular clear space between sleeve and pipe or pipe insulation.
   c. Seal space outside of sleeves with grout for penetrations of concrete and masonry and with approved joint sealant for gypsum board assemblies. Comply with requirements for sealants specified in Division 07 Section "Joint Sealants."
   d. Seal annular space between sleeve and piping or piping insulation; use joint sealants appropriate for size, depth, and location of joint. Comply with requirements for sealants specified in Division 07 Section "Joint Sealants."

D. Fire-Barrier Penetrations: Maintain indicated fire rating of walls and partitions at pipe penetrations. Seal pipe penetrations with firestop materials. Refer to Division 07 Section "Penetration Firestopping" for materials.

3.3 EQUIPMENT INSTALLATION - COMMON REQUIREMENTS

A. Rigging:

1. Verify that rigging path for equipment prior to start of work or ordering of materials. Verify accessways and weight carrying capacity of existing building features, including freight elevators, floors, walls, ceilings, and related features. When equipment or sections of equipment are larger than available accessways, equipment shall be ordered in a knocked-down configuration for re-assembly at the site. Submit in writing to Architect where problems are encountered that may prohibit rigging of equipment into space with the proposed solutions.
2. Use planking or cribbing as required to protect adjoining construction from damage. Protect equipment from damage until construction is completed.

B. Install equipment to allow maximum possible headroom unless specific mounting heights are not indicated.

C. Install equipment level and plumb, parallel and perpendicular to other building systems and components in exposed interior spaces, unless otherwise indicated.

D. Install mechanical equipment to facilitate service, maintenance, and repair or replacement of components. Connect equipment for ease of disconnecting, with minimum interference to other installations. Extend grease fittings to accessible locations. In no case shall equipment be installed with service clearance less than manufacturer's recommendations.

E. Install equipment to allow right of way for piping installed at required slope.

3.4 EQUIPMENT CONNECTIONS – COMMON REQUIREMENTS

A. Equipment shall be installed and connected in accordance with the best engineering practice and in accordance with manufacturer's instructions and recommendations. Auxiliary piping, valves, and electric connections recommended by the manufacturer or required for proper operation shall be provided.

B. See Division 26 for electrical power wiring and final connections to motors and equipment requiring electric service. Temperature control wiring between starters and controlling devices and interlock wiring are specified in Division 23, section "Instrumentation and Control for HVAC". Verify that the proper power wiring services are installed prior to starting the equipment specified in Division 23.

3.5 PAINTING

A. Painting of mechanical systems, equipment, and components is specified in Division 09 painting sections.

B. Damage and Touchup: Repair marred and damaged factory-painted finishes with materials and procedures to match original factory finish. Provide complete new finish if, in the opinion of the Architect or COTR, the factory finishes are severely damaged.

1. Touch up threads of zinc coated screwed pipe with Rustoleum primer and one coat of enamel conforming to painting specification.
2. Refer to Division 23 Section "Metal Ducts" for painting requirements behind grilles and registers.
3. Prepare piping and ductwork and associated hangers specified to be painted to accept field paint.

3.6 ERECTION OF METAL SUPPORTS AND ANCHORAGES

A. Refer to Division 05 for structural steel.

B. Cut, fit, and place miscellaneous metal supports accurately in location, alignment, and elevation to support and anchor mechanical materials and equipment.

C. Field Welding: Comply with AWS D1.1.

3.7 CLEANING

A. See Division 01 Section "Project Closeout Requirements."

B. Thoroughly clean exposed surfaces of equipment and material and leave in a neat, clean condition ready for painting.

3.8 EQUIPMENT STARTUP SERVICE – COMMON REQUIREMENTS

A. See Division 01 Section "Project Closeout Requirements", for general requirements.

B. No equipment shall be operated for testing or trial use until there has been full compliance with the equipment manufacturers' specifications and instructions for lubrication, alignment, direction of rotation, balance, and other applicable considerations.

C. Particular care shall be taken to verify that equipment is completely assembled and properly lubricated, and grease and oil cases and reservoirs have been filled to the correct level with the recommended lubricant.

D. Where specified, provide services of the manufacturer or his authorized representative to witness, supervise, or assist in the installation and start-up of equipment provided under this Division.

3.9 DEMONSTRATION – COMMON REQUIREMENTS

A. See Division 01, Section "Project Closeout Requirements" and "Demonstration and Training" for general requirements of demonstration and training.

B. Upon completion of work and of tests, furnish the necessary skilled labor and helpers for operating and demonstrating the systems and equipment.

C. The instructor shall be thoroughly familiar with parts of the installation on which he is to give instruction and shall be trained in operating theory as well as practical operation and maintenance work. Employ factory trained instructors wherever necessary and as specified.

D. Instructions shall include a general description of each system together with specific instructions describing routine and emergency procedures required of the building personnel for operating and maintaining each system. The instructions shall include the name or label, location, and function of operating equipment and controls. Operating modes and the procedures for indexing each mode shall be clearly described. Include lubrication charts and schedules of frequency of lubrication for equipment, designating each point of lubrication and type of lubricant to be used. Listings of names, addresses, and phone numbers of the service organizations for each item of equipment and a typewritten maintenance schedule for same shall be included.

E. Training of the COTR's operation and maintenance personnel is required in cooperation with the Commissioning Authority. Provide competent, factory authorized personnel to provide instruction to operation and maintenance personnel concerning the location, operation, and troubleshooting of the installed systems. The instruction shall be scheduled in coordination with the Commissioning Authority after submission and approval of formal training plans.

1. Refer to Division 01 Section "Demonstration and Training" for contractor training requirements.

3.10 WARRANTY SERVICE – COMMON REQUIREMENTS

A. See Division 01 and General Conditions for general requirements.

B. Provide service of the equipment manufacturer or his authorized representative, if required to achieve specified performance of equipment provided.

C. During the warranty period, service equipment provided except existing equipment, filter replacement, and belt replacement. Provide labor and materials in accordance with manufacturer's written instructions for service and maintenance. Prior to the start of warranty period, provide to the Architect for approval, a schedule of required maintenance operations to be performed during the warranty period and required periodically thereafter for each system and item of equipment. Thereafter, monthly reports shall be submitted to the COTR for describing actual service performed. Forty-eight (48) hours advance notice shall be given to COTR prior to work required.

END OF SECTION 23 0500

SECTION 23 0513 - COMMON MOTOR REQUIREMENTS FOR HVAC EQUIPMENT

PART 1 - GENERAL

1.1 RELATED DOCUMENTS

A. Drawings and general provisions of the Contract, including General and Supplementary Conditions and Division 01 Specification Sections, apply to this Section.

1.2 SUMMARY

A. Section includes general requirements for single-phase and polyphase, general-purpose, horizontal, small and medium, squirrel-cage induction motors for use on ac power systems up to 600 V and installed at equipment manufacturer's factory or shipped separately by equipment manufacturer for field installation.

1.3 COORDINATION

A. Coordinate features of motors, installed units, and accessory devices to be compatible with the following:

1. Motor controllers.
2. Torque, speed, and horsepower requirements of the load.
3. Ratings and characteristics of supply circuit and required control sequence.
4. Ambient and environmental conditions of installation location.
5. Designed and labeled for use with variable frequency controllers, and suitable for use throughout speed range without overheating.

PART 2 - PRODUCTS

2.1 GENERAL MOTOR REQUIREMENTS

A. Comply with NEMA MG 1 unless otherwise indicated.

2.2 MOTOR CHARACTERISTICS

A. Duty: Continuous duty at ambient temperature of 40 deg C and at altitude of 3300 feet (1000 m) above sea level.

B. Capacity and Torque Characteristics: Sufficient to start, accelerate, and operate connected loads at designated speeds, at installed altitude and environment, with indicated operating sequence, and without exceeding nameplate ratings or considering service factor.

2.3 POLYPHASE MOTORS

A. Description: NEMA MG 1, Design B, medium induction motor.

B. Efficiency: Premium, as defined in NEMA MG 1.

C. Rotor: Random-wound, squirrel cage.

D. Bearings: Regreasable, shielded, antifriction ball bearings suitable for radial and thrust loading.

E. Temperature Rise: Match insulation rating.

F. Insulation: Class F, unless otherwise specified.

G. Code Letter Designation:

1. Motors 15 HP and Larger: NEMA starting Code F or Code G.
2. Motors Smaller than 15 HP: Manufacturer's standard starting characteristic.

H. Enclosure Material: Cast iron for motor frame sizes 324T and larger; rolled steel for motor frame sizes smaller than 324T.

2.4 POLYPHASE MOTORS WITH ADDITIONAL REQUIREMENTS

A. Motors Used with Reduced-Voltage and Multispeed Controllers: Match wiring connection requirements for controller with required motor leads. Provide terminals in motor terminal box, suited to control method.

B. Motors Used with Variable Frequency Controllers: Ratings, characteristics, and features coordinated with and approved by controller manufacturer.
1. Windings: Copper magnet wire with moisture-resistant insulation varnish, designed and tested to resist transient spikes, high frequencies, and short time rise pulses produced by pulse-width modulated inverters.
2. Temperature Rise: Matched to rating for Class B insulation.
3. Insulation: Class F.
4. Thermal Protection: Comply with NEMA MG 1 requirements for thermally protected motors.
5. Provide shaft grounding brush equal to Aegis SGR™ Conductive Microfiber™.
6. Variable Frequency Controllers are specified in Division 26 Section “Variable Frequency Controllers.”

2.5 SINGLE-PHASE MOTORS

A. Motors larger than 1/20 hp shall be one of the following, to suit starting torque and requirements of specific motor application:

1. Permanent-split capacitor.
2. Split phase.
3. Capacitor start, inductor run.
4. Capacitor start, capacitor run.

B. Multispeed Motors: Variable-torque, permanent-split-capacitor type.

C. Bearings: Prelubricated, antifriction ball bearings or sleeve bearings suitable for radial and thrust loading.

D. Motors 1/20 HP and Smaller: Shaded-pole type.

E. Thermal Protection: Internal protection to automatically open power supply circuit to motor when winding temperature exceeds a safe value calibrated to temperature rating of motor insulation. Thermal-protection device shall automatically reset when motor temperature returns to normal range.

PART 3 - EXECUTION (Not Applicable)

END OF SECTION 23 0513

SECTION 23 0529 - HANGERS AND SUPPORTS FOR MECHANICAL

PART 1 - GENERAL

1.1 RELATED DOCUMENTS

A. Drawings and general provisions of the Contract, including General and Supplementary Conditions and Division 01 Specification Sections, apply to this Section.

1.2 SUMMARY

A. This Section includes the following hangers and supports for mechanical system piping and equipment:
   1. Steel pipe hangers and supports.
   2. Metal framing systems.
   3. Thermal-hanger shield inserts.
   4. Fastener systems.
   5. Equipment supports.

B. Related Sections include the following:
   1. Division 05 Sections for structural-steel shapes and plates for equipment supports.
   2. Division 21 Section “Division 23 Section "Mechanical Vibration Control" for vibration isolation devices and additional hanger and support requirements.
   3. Division 23 Section "Metal Ducts" for duct hangers and supports.

1.3 DEFINITIONS

A. MSS: Manufacturers Standardization Society for The Valve and Fittings Industry Inc.

B. Terminology: As defined in MSS SP-90, "Guidelines on Terminology for Pipe Hangers and Supports."

1.4 PERFORMANCE REQUIREMENTS

A. Design supports for multiple pipes, including pipe stands, capable of supporting combined weight of supported systems, system contents, and test water.

B. Design equipment supports capable of supporting combined operating weight of supported equipment and connected systems and components.

1.5 QUALITY ASSURANCE

A. Welding: Qualify procedures and personnel according to the following:
   1. AWS D1.1, "Structural Welding Code--Steel."
   2. AWS D1.3, "Structural Welding Code--Sheet Steel."
   3. AWS D1.4, "Structural Welding Code--Reinforcing Steel."
   4. ASME Boiler and Pressure Vessel Code: Section IX.

PART 2 - PRODUCTS

2.1 MANUFACTURERS

A. In other Part 2 articles where titles below introduce lists, the following requirements apply to product selection:
   1. Manufacturers: Subject to compliance with requirements, provide products by one of the manufacturers specified.

2.2 STEEL PIPE HANGERS AND SUPPORTS

A. Description: MSS SP-58, Types 1 through 58, factory-fabricated components. Refer to Part 3 "Hanger and Support Applications" Article for where to use specific hanger and support types.

B. Manufacturers:
   1. B-Line Systems, Inc.; a division of Cooper Industries.
   2. Grinnell Corp.
   3. National Pipe Hanger Corporation.
   4. Piping Technology & Products, Inc.

C. Galvanized, Metallic Coatings: Pregalvanized or hot dipped.

D. Nonmetallic Coatings: Plastic coating, jacket, or liner.

2.3 METAL FRAMING SYSTEMS

A. Description: MFMA-3, shop- or field-fabricated pipe-support assembly made of steel channels and other components.

B. Manufacturers:
   1. B-Line Systems, Inc.; a division of Cooper Industries.
   2. Power-Strut Div.; Tyco International, Ltd.
   3. Thomas & Betts Corporation.
   4. Unistrut Corp.; Tyco International, Ltd.

C. Coatings: Manufacturer's standard finish, unless bare metal surfaces are indicated.

D. Nonmetallic Coatings: Plastic coating, jacket, or liner.

2.4 THERMAL-HANGER SHIELD INSERTS

A. Description: 100-psig- minimum, compressive-strength insulation insert encased in sheet metal shield.

B. Manufacturers:
   1. Carpenter & Paterson, Inc.
   2. Erico/Michigan Hanger Co.
   3. PHS Industries, Inc.
   4. Pipe Shields, Inc.
   5. Rilco Manufacturing Company, Inc.

6. Value Engineered Products, Inc.

C. Insulation-Insert Material for Cold Piping: Water-repellent treated, ASTM C 533, Type I calcium silicate or ASTM C 552, Type II cellular glass with vapor barrier.

D. For Clevis Hangers: Insert and shield shall cover lower 180 degrees of pipe.

E. Insert Length: Extend 2 inches beyond sheet metal shield for piping operating below ambient air temperature.

2.5 FASTENER SYSTEMS

A. Powder-Actuated Fasteners: Threaded-steel stud, for use in hardened portland cement concrete with pull-out, tension, and shear capacities appropriate for supported loads and building materials where used.
   1. Manufacturers:
      a. Hilti, Inc.
      b. ITW Ramset/Red Head.
      c. Masterset Fastening Systems, Inc.

B. Mechanical-Expansion Anchors: Insert-wedge-type zinc-coated steel, for use in hardened portland cement concrete with pull-out, tension, and shear capacities appropriate for supported loads and building materials where used.
   1. Manufacturers:
      a. B-Line Systems, Inc.; a division of Cooper Industries.
      b. Hilti, Inc.
      c. ITW Ramset/Red Head.

2.6 EQUIPMENT SUPPORTS

A. Description: Welded, shop- or field-fabricated equipment support made from galvanized, structural-steel shapes.

2.7 MISCELLANEOUS MATERIALS

A. Structural Steel: ASTM A 36/A 36M, steel plates, shapes, and bars; black and galvanized.

PART 3 - EXECUTION

3.1 HANGER AND SUPPORT APPLICATIONS

A. Specific hanger and support requirements are specified in Sections specifying piping systems and equipment.

B. Comply with MSS SP-58 for pipe hanger selections and applications that are not specified in piping system Sections.

C. Use hangers and supports with galvanized, metallic coatings for piping and equipment that will not have field-applied finish.

D. Use padded hangers for piping that is subject to scratching.

E. Size hangers and supports to match OD of pipe insulation.

F. Horizontal-Piping Hangers and Supports: Unless otherwise indicated and except as specified in piping system Sections, install the following types:
   1. Adjustable, Steel Clevis Hangers (MSS Type 1): For suspension of noninsulated or insulated stationary pipes, NPS 1/2 to NPS 30.

G. Hanger-Rod Attachments: Unless otherwise indicated and except as specified in piping system Sections, install the following types:
   1. Steel Turnbuckles (MSS Type 13): For adjustment up to 6 inches for heavy loads.
   2. Steel Clevises (MSS Type 14): For 120 to 450 deg F piping installations.
   3. Swivel Turnbuckles (MSS Type 15): For use with MSS Type 11, split pipe rings.
   4. Malleable-Iron Sockets (MSS Type 16): For attaching hanger rods to various types of building attachments.
   5. Steel Weldless Eye Nuts (MSS Type 17): For 120 to 450 deg F piping installations.

H. Building Attachments: Unless otherwise indicated and except as specified in piping system Sections, install the following types:
   1. Steel or Malleable Concrete Inserts (MSS Type 18): For upper attachment to suspend pipe hangers from concrete ceiling.

I. Saddles and Shields: Unless otherwise indicated and except as specified in piping system Sections, install the following types:
   1. Steel Pipe-Covering Protection Saddles (MSS Type 39): Fill interior voids with insulation that matches adjoining insulation.
   2. Thermal-Hanger Shield Inserts: For supporting insulated pipe.

J. Spring Hangers and Supports: Refer to Division 23 section “Mechanical Vibration Control” .

K. Comply with MFMA-102 for metal framing system selections and applications that are not specified in piping system Sections.

L. Use powder-actuated fasteners or mechanical-expansion anchors instead of building attachments where required in concrete construction.

M. Use pipe positioning systems in pipe spaces behind plumbing fixtures to support supply and waste piping for plumbing fixtures.

3.2 HANGER AND SUPPORT INSTALLATION

A. Steel Pipe Hanger Installation: Comply with MSS SP-58 and MSS SP-89. Install hangers, supports, clamps, and attachments as required to properly support piping from building structure.

B. Metal Framing System Installation: Arrange for grouping of parallel runs of piping and support together on field-assembled metal framing systems.

C. Thermal-Hanger Shield Installation: Install in pipe hanger and provide sheet metal shield for insulated piping.

D. Fastener System Installation:
   1. Install powder-actuated fasteners for use in lightweight concrete or concrete slabs less than 4 inches thick in concrete after concrete is placed and completely cured. Use operators that are licensed by powder-actuated tool manufacturer. Install fasteners according to powder-actuated tool manufacturer's operating manual.
   2. Install mechanical-expansion anchors in concrete after concrete is placed and completely cured. Install fasteners according to manufacturer's written instructions.

E. Install hangers and supports complete with necessary inserts, bolts, rods, nuts, washers, and other accessories.

F. Equipment Support Installation: Fabricate from welded-structural-steel shapes.

G. Install hangers and supports to allow controlled thermal movement of piping systems, to permit freedom of movement between pipe anchors, and to facilitate action of expansion joints, expansion loops, expansion bends, and similar units.

H. Install building attachments within concrete slabs or attach to structural steel. Install additional attachments at concentrated loads, including valves, flanges, and strainers, NPS 2-1/2 and larger and at changes in direction of piping. Install concrete inserts before concrete is placed; fasten inserts to forms and install reinforcing bars through openings at top of inserts.

I. Load Distribution: Install hangers and supports so piping live and dead loads and stresses from movement will not be transmitted to connected equipment.

J. Pipe Slopes: Install hangers and supports to provide indicated pipe slopes and so maximum pipe deflections allowed by ASME B31.9 for building services piping are not exceeded.

K. Insulated Piping: Comply with the following:
   1. Install thermal-hanger shield inserts on cold piping with vapor barrier. Include sheet metal shield on exterior of insulation jacket.
   2. Sheet Metal Shield Dimensions for Pipe: Not less than the following:
      a. NPS 1/4 to NPS 3-1/2: 12 inches long.
      b. NPS 4: 12 inches long.
      c. NPS 5 and NPS 6: 18 inches long.
   3. Insert Material for Type 39 Saddles: Length at least as long as protective shield.
   4. Thermal-Hanger Shields: Install with insulation same thickness as piping insulation.

3.3 EQUIPMENT SUPPORTS

A. Fabricate structural-steel stands to suspend equipment from structure overhead or to support equipment above floor.

B. Grouting: Place grout under supports for equipment and make smooth bearing surface.

C. Provide lateral bracing, to prevent swaying, for equipment supports.

3.4 METAL FABRICATIONS

A. Cut, drill, and fit miscellaneous metal fabrications for equipment supports.

B. Fit exposed connections together to form hairline joints. Field weld connections that cannot be shop welded because of shipping size limitations.

C. Field Welding: Comply with AWS D1.1 procedures for shielded metal arc welding, appearance and quality of welds, and methods used in correcting welding work, and with the following:
   1. Use materials and methods that minimize distortion and develop strength and corrosion resistance of base metals.
   2. Obtain fusion without undercut or overlap.
   3. Remove welding flux immediately.
   4. Finish welds at exposed connections so no roughness shows after finishing and contours of welded surfaces match adjacent contours.

3.5 ADJUSTING

A. Hanger Adjustments: Adjust hangers to distribute loads equally on attachments and to achieve indicated slope of pipe.

B. Trim excess length of continuous-thread hanger and support rods.

3.6 PAINTING

A. Touch Up: Cleaning and touchup painting of field welds, bolted connections, and abraded areas of shop paint on miscellaneous metal are specified in Division 09 painting sections.

B. Galvanized Surfaces: Clean welds, bolted connections, and abraded areas and apply galvanizing-repair paint to comply with ASTM A 780.

END OF SECTION 23 0529

SECTION 23 0548 - MECHANICAL VIBRATION CONTROL

PART 1 - GENERAL

1.1 RELATED DOCUMENTS

A. Drawings and general provisions of the Contract, including General and Supplementary Conditions and Division 01 Specification Sections, apply to this Section.

1.2 SUMMARY

A. This Section includes the following:
   1. Isolation pads.
   2. Isolation mounts.
   3. Horizontal thrust restraints.
   4. Elastomeric hangers.
   5. Spring hangers.
   6. Resilient washer-bushings.

B. Related Sections include the following:
   1. Division 23 Section “Air Duct Accessories” for flexible duct connectors.
   2. Other Division 22 piping Sections for piping flexible connectors in respective systems.

1.3 SUBMITTALS

A. Product Data: For the following:
   1. Include rated load, rated deflection, and overload capacity for each vibration isolation device.

B. Field quality-control test reports.

1.4 QUALITY ASSURANCE

A. Welding: Qualify procedures and personnel according to AWS D1.1/D1.1M, "Structural Welding Code - Steel."

PART 2 - PRODUCTS

2.1 VIBRATION ISOLATORS

A. Manufacturers: Subject to compliance with requirements, provide products by one of the following:
   1. Amber/Booth Company, Inc.
   2. Kinetics Noise Control.
   3. Mason Industries.
   4. Vibration Mountings & Controls, Inc.

B. Pads: Arranged in single or multiple layers of sufficient stiffness for uniform loading over pad area, molded with a nonslip pattern and galvanized-steel baseplates, and factory cut to sizes that match requirements of supported equipment.
   1. Resilient Material: Oil- and water-resistant neoprene.
   2. Thickness: Minimum 5/16-inch-.
   3. Maximum Durometer: 50.

C. Mounts: Double-deflection type, with molded, oil-resistant neoprene isolator elements with factory-drilled, encapsulated top plate for bolting to equipment and with baseplate for bolting to structure. Color-code or otherwise identify to indicate capacity range.
   1. Materials: Cast-ductile-iron or welded steel housing containing two separate and opposing, oil-resistant neoprene elements that prevent central threaded element and attachment hardware from contacting the housing during normal operation.
   2. Neoprene: Shock-absorbing materials compounded according to the standard for bridge-bearing neoprene as defined by AASHTO.
      a. Maximum Durometer: 70.

D. Spring Isolators: Freestanding, laterally stable, open-spring isolators.
   1. Outside Spring Diameter: Not less than 80 percent of the compressed height of the spring at rated load.
   2. Minimum Additional Travel: 50 percent of the required deflection at rated load.
   3. Lateral Stiffness: More than 80 percent of rated vertical stiffness.
   4. Overload Capacity: Support 200 percent of rated load, fully compressed, without deformation or failure.
   5. Baseplates: Factory drilled for bolting to structure and bonded to 1/4-inch- thick, rubber isolator pad attached to baseplate underside. Baseplates shall limit floor load to 500 psig.
   6. Top Plate and Adjustment Bolt: Threaded top plate with adjustment bolt and cap screw to fasten and level equipment.

E. Elastomeric Hangers: Double-deflection type, fitted with molded, oil-resistant elastomeric isolator elements bonded to steel housings with threaded connections for hanger rods. Color-code or otherwise identify to indicate capacity range.
   1. Frame: Steel, fabricated for connection to threaded hanger rods and to allow for a maximum of 30 degrees of angular hanger-rod misalignment without binding or reducing isolation efficiency.
   2. Elastomeric Element: Molded, oil-resistant rubber or neoprene. Steel-washer-reinforced cup to support spring and bushing projecting through bottom of frame.
   3. Maximum Durometer: 70.

F. Spring Hangers: Combination coil-spring and elastomeric-insert hanger with spring and insert in compression.
   1. Frame: Steel, fabricated for connection to threaded hanger rods and to allow for a maximum of 30 degrees of angular hanger-rod misalignment without binding or reducing isolation efficiency.
   2. Outside Spring Diameter: Not less than 80 percent of the compressed height of the spring at rated load.
   3. Minimum Additional Travel: 50 percent of the required deflection at rated load.
   4. Lateral Stiffness: More than 80 percent of rated vertical stiffness.
   5. Overload Capacity: Support 200 percent of rated load, fully compressed, without deformation or failure.

6. Elastomeric Element: Molded, oil-resistant rubber or neoprene. Steel-washer-reinforced cup to support spring and bushing projecting through bottom of frame.
7. Self-centering hanger rod cap to ensure concentricity between hanger rod and support spring coil.

G. Resilient Washer-Bushings: Molded, oil resistant bridge bearing neoprene.

2.2 FACTORY FINISHES

A. Finish (where field painting of mechanical items is specified in Division 09): Manufacturer's standard prime-coat finish ready for field painting.

B. Finish (where field painting of mechanical items is not specified in Division 09): Manufacturer's standard paint applied to factory-assembled and -tested equipment before shipping.
1. Powder coating on springs.
2. All hardware shall be galvanized.
3. Hot-dip galvanize metal components on isolators (except springs) for exterior use.
4. Baked enamel or powder coat for metal components on isolators for interior use.
5. Color-code or otherwise mark vibration isolation and wind-control devices to indicate capacity range.

PART 3 - EXECUTION

3.1 EXAMINATION

A. Examine areas and equipment to receive vibration isolation for compliance with requirements for installation tolerances and other conditions affecting performance.

B. Examine roughing-in of reinforcement and cast-in-place anchors to verify actual locations before installation.

C. Proceed with installation only after unsatisfactory conditions have been corrected.

3.2 VIBRATION-CONTROL DEVICE INSTALLATION

A. Install resilient washer-bushing assemblies for anchor bolts for floor-mounted equipment, arranged to provide resilient media between anchor bolt and mounting hole in concrete base.

B. Install resilient washer-bushing assemblies for mounting bolts for wall-mounted equipment, arranged to provide resilient media where equipment or equipment-mounting channels are attached to wall.

C. Drilled-in Anchors:
1. Identify position of reinforcing steel and other embedded items prior to drilling holes for anchors. Do not damage existing reinforcing or embedded items during coring or drilling. Notify the structural engineer if reinforcing steel or other embedded items are encountered during drilling. Locate and avoid prestressed tendons, electrical and telecommunications conduit, and gas lines.

2. Do not drill holes in concrete or masonry until concrete, mortar, or grout has achieved full design strength.
3. Wedge Anchors: Protect threads from damage during anchor installation. Heavy-duty sleeve anchors shall be installed with sleeve fully engaged in the structural element to which anchor is to be fastened.
4. Adhesive Anchors: Clean holes to remove loose material and drilling dust prior to installation of adhesive. Place adhesive in holes proceeding from the bottom of the hole and progressing toward the surface in such a manner as to avoid introduction of air pockets in the adhesive.
5. Set anchors to manufacturer's recommended torque, using a torque wrench.
6. Install zinc-coated steel anchors for interior and stainless-steel anchors for exterior applications.

D. Align vibration isolators squarely above or below mounting points of the supported equipment.

E. Position vibration isolation hangers as high as possible in the hanger rod assembly but not in contact with the building structure. Provide 1-inchminimum clearance between hanger housing and structure above. Provide side clearance for hanger housings to allow a full 360-degree rotation about the rod axis without contacting any object.

F. Parallel pipes may be hung together on a trapeze that is isolated from the structure. Isolator deflections must equal the greatest deflection for those pipes if isolated individually. Do not mix isolated and non-isolated pipes on the same trapeze.

G. Do not hang or support piping, ductwork, conduit or mechanical equipment on other equipment, pipes or ductwork installed on vibration isolators. Maintain 2-inchclearance between isolated equipment and walls, ceilings and other equipment. Do not allow drain piping connected to vibration-isolated equipment to contact the building structure or other non-isolated systems unless it is resiliently mounted.

H. Flexible Ductwork Connectors: Provide flexible ductwork connectors in ductwork at the point where it is connected to externally isolated air handling unit casings, exhaust fans, energy recovery ventilators, fan coils or any other vibration-isolated equipment. Install these connectors between the equipment and the first associated duct support or hanger.

I. The installation or use of vibration isolators shall not cause any change of position of piping which will result in stresses in piping connections or misalignment of shafts or bearings. In order to meet this objective, maintain equipment and piping in a rigid position during installation. Do not transfer the load to the isolators until the installation is complete and under full operational load.

3.3 FIELD QUALITY CONTROL

A. Testing Agency: Engage the isolator manufacturer or their authorized representative to perform tests and inspections.

B. Tests and Inspections:
1. Provide evidence of recent calibration of test equipment by an independent testing agency.

2. Schedule test with COTR, through Architect, and with at least seven days' advance notice.
3. Test equipment isolators and first four associated vibration isolation hangers from each equipment connection.
4. Measure isolator restraint clearance.
5. Measure isolator deflection.
6. Inspect vibration control devices and remove paint splatters, spots, dirt, and debris.
7. Vibration testing is specified in Division 23 Section "Testing, Adjusting, and Balancing for HVAC."
8. If a device fails test, modify all installations of same type and retest until satisfactory results are achieved.

C. Remove and replace malfunctioning units and retest as specified above.

D. Prepare test and inspection reports.

3.4 ADJUSTING

A. Adjust isolators after piping system is at operating weight.

B. Adjust active height of spring isolators so that isolated equipment is level and in proper alignment with connecting ducts and pipes.

C. Adjust restraints to permit free movement of equipment within normal mode of operation.

D. Attach thrust restraints at centerline of thrust and adjust to a maximum of 1/4-inch- movement during start and stop.

3.5 HVAC VIBRATION-CONTROL DEVICE SCHEDULE

ITEM DESCRIPTION	**ISOLATOR AND BASE TYPE**	**MIN. STATIC DEFLECTION -** inches	
		Slab On Grade	**Floor Span**
DUCTWORK			
First two supports near EF-3	Spring Hangers (suspended); Spring Isolators (floor mounted)	--	2.5
First two supports near EF-1 & EF-2	Elastomeric Hangers (suspended); Isolation Mounts (floor mounted)	0.35	0.35
After first two supports, within 50 ft. of isolated equipment	Elastomeric Hangers (suspended); Isolation Mounts (floor mounted)	0.35	0.35
Connections to EF-3	Flexible Duct Connectors and Horizontal Thrust Restraints	--	2.5

ITEM DESCRIPTION	**ISOLATOR AND BASE TYPE**	**MIN. STATIC DEFLECTION -** inches	
		Slab On Grade	**Floor Span**
FANS			
EF-1 & EF-2	Pad	--	0.25
EF-3	Spring Hangers	--	2.5

END OF SECTION 23 0548

SECTION 23 0553-IDENTIFICATION FOR MECHANICAL

PART 1 - GENERAL

1.1 RELATED DOCUMENTS

A. Drawings and general provisions of the Contract, including General and Supplementary Conditions and Division 01 Specification Sections, apply to this Section.

1.2 SUMMARY

A. This Section includes the following mechanical identification materials and their installation:
   1. Equipment nameplates.
   2. Equipment markers.
   3. Access panel and door markers.
   4. Duct markers.
   5. Stencils.

1.3 SUBMITTALS

A. Product Data: For each type of product indicated.

1.4 COORDINATION

A. Coordinate installation of identifying devices with completion of covering and painting of surfaces where devices are to be applied.

B. Coordinate installation of identifying devices with location of access panels and doors.

C. Install identifying devices before installing acoustical ceilings and similar concealment.

PART 2 - PRODUCTS

2.1 EQUIPMENT IDENTIFICATION DEVICES

A. Equipment Nameplates: Metal, with data engraved or stamped, for permanent attachment on equipment.
   1. Data:
      a. Manufacturer, product name, model number, and serial number.
      b. Capacity, operating and power characteristics, and essential data.
      c. Labels of tested compliances.
   2. Location: Accessible and visible.
   3. Fasteners: As required to mount on equipment.

B. Equipment Markers: Engraved, color-coded laminated plastic. Include contact-type, permanent adhesive.
   1. Terminology: Match schedules as closely as possible.
   2. Data:

a. Name and plan number.
b. Equipment service.
c. Design capacity.
d. Other design parameters such as pressure drop, entering and leaving conditions, and speed.

3. Size: 2-1/2 by 4 inches for control devices and dampers ; 4-1/2 by 6 inches for equipment.

C. Access Panel and Door Markers: 1/16-inch- thick, engraved laminated plastic, with abbreviated terms and numbers corresponding to identification. Provide 1/8-inch center hole for attachment.
1. Fasteners: Self-tapping, stainless-steel screws or contact-type, permanent adhesive.

2.2 STENCILS

A. Stencils: Prepared with minimum letter height of 1-1/4 inches for ducts and minimum letter height of 3/4 inch for access panel and door markers, and similar operational instructions.
1. Stencil Material: Metal or fiberboard.
2. Stencil Paint: Exterior, gloss, acrylic enamel black, unless otherwise indicated. Paint shall be in pressurized spray-can form.
3. Identification Paint: Exterior, acrylic enamel in colors according to ASME A13.1, unless otherwise indicated.

PART 3 - EXECUTION

3.1 APPLICATIONS, GENERAL

A. Products specified are for applications referenced in other Division 21, 22 and 23 Sections. If more than single-type material, device, or label is specified for listed applications, selection is Installer's option.

3.2 EQUIPMENT IDENTIFICATION

A. Install and permanently fasten equipment nameplates on each major item of mechanical equipment that does not have nameplate or has nameplate that is damaged or located where not easily visible. Locate nameplates where accessible and visible. Include nameplates for the following general categories of equipment:
1. Fans, blowers, primary balancing dampers.

B. Install equipment markers with permanent adhesive on or near each major item of mechanical equipment.
1. Letter Size: Minimum 1/4 inch for name of units if viewing distance is less than 24 inches, 1/2 inch for viewing distances up to 72 inches, and proportionately larger lettering for greater viewing distances. Include secondary lettering two-thirds to three-fourths the size of principal lettering.
2. Data: Distinguish among multiple units, indicate operational requirements, indicate safety and emergency precautions, warn of hazards and improper operations, and identify units.
3. Locate markers where accessible and visibleDelete paragraph below if stenciled markers are prohibited.

C. Install access panel markers with screws on equipment access panels.

3.3 DUCT IDENTIFICATION

A. Install stenciled markers on ductwork:
   1. Stenciled Duct Marker: Stenciled markers, showing designation of equipment serving ducts (EF-1, etc.), service (exhaust-air, etc.) and direction of flow.

B. Locate markers near points where ducts enter into concealed spaces and at maximum intervals of 50 feet in each space where ducts are exposed or concealed by removable ceiling system.

3.4 ADJUSTING

A. Relocate mechanical identification materials and devices that have become visually blocked by other work.

3.5 CLEANING

A. Clean faces of mechanical identification devices.

END OF SECTION 23 0553

SECTION 23 0593 - TESTING, ADJUSTING, AND BALANCING FOR HVAC

PART 1 - GENERAL

1.1 RELATED DOCUMENTS

A. Drawings and general provisions of the Contract, including General and Supplementary Conditions and Division 01 Specification Sections, apply to this Section.

1.2 SUMMARY

A. Section Includes:

1. Balancing Air Systems:

a. Constant-volume air systems.
b. Variable-volume air systems.

1.3 DEFINITIONS

A. AABC: Associated Air Balance Council.

B. NEBB: National Environmental Balancing Bureau.

C. TAB: Testing, adjusting, and balancing.

D. TABB: Testing, Adjusting, and Balancing Bureau.

E. TAB Specialist: An entity engaged to perform TAB Work.

1.4 INFORMATIONAL SUBMITTALS

A. Qualification Data: Within 30 days of Contractor's Notice to Proceed, submit documentation that the TAB contractor and this Project's TAB team members meet the qualifications specified in "Quality Assurance" Article.

B. Contract Documents Examination Report: Within 30 days of Contractor's Notice to Proceed, submit the Contract Documents review report as specified in Part 3.

C. Strategies and Procedures Plan: Within 60 days of Contractor's Notice to Proceed, submit TAB strategies and step-by-step procedures as specified in "Preparation" Article.

D. Certified TAB reports.

E. Sample report forms.

F. Instrument calibration reports, to include the following:

1. Instrument type and make.

2. Serial number.
3. Application.
4. Dates of use.
5. Dates of calibration.

1.5 QUALITY ASSURANCE

A. TAB Contractor Qualifications: Engage a TAB entity certified by AABC or NEBB.

1. TAB Field Supervisor: Employee of the TAB contractor and certified by AABC or NEBB.
2. TAB Technician: Employee of the TAB contractor and who is certified by AABC or NEBB as a TAB technician.

B. TAB Conference: Meet with Owner on approval of the TAB strategies and procedures plan to develop a mutual understanding of the details. Require the participation of the TAB field supervisor and technicians. Provide seven days' advance notice of scheduled meeting time and location.

1. Agenda Items:

a. The Contract Documents examination report.
b. The TAB plan.
c. Coordination and cooperation of trades and subcontractors.
d. Coordination of documentation and communication flow.

C. Certify TAB field data reports and perform the following:

1. Review field data reports to validate accuracy of data and to prepare certified TAB reports.
2. Certify that the TAB team complied with the approved TAB plan and the procedures specified and referenced in this Specification.

D. TAB Report Forms: Use standard TAB contractor's forms approved by Owner.

E. Instrumentation Type, Quantity, Accuracy, and Calibration: As described in ASHRAE 111, Section 5, "Instrumentation."

1.6 PROJECT CONDITIONS

A. Full Owner Occupancy: Owner will occupy the site and existing building during entire TAB period. Cooperate with Owner during TAB operations to minimize conflicts with Owner's operations.

1.7 COORDINATION

A. Notice: Provide seven days' advance notice for each test. Include scheduled test dates and times.

B. Perform TAB after leakage and pressure tests on air distribution systems have been satisfactorily completed.

PART 2 - PRODUCTS (Not Applicable)

PART 3 - EXECUTION

3.1 EXAMINATION

A. Examine the Contract Documents to become familiar with Project requirements and to discover conditions in systems' designs that may preclude proper TAB of systems and equipment.

B. Examine systems for installed balancing devices, such as test ports, flow-control devices, balancing valves and fittings, and manual volume dampers. Verify that locations of these balancing devices are accessible.

C. Examine the approved submittals for HVAC systems and equipment.

D. Examine design data including HVAC system descriptions, statements of design assumptions for environmental conditions and systems' output, and statements of philosophies and assumptions about HVAC system and equipment controls.

E. Examine equipment performance data including fan and pump curves.

1. Relate performance data to Project conditions and requirements, including system effects that can create undesired or unpredicted conditions that cause reduced capacities in all or part of a system.
2. Calculate system-effect factors to reduce performance ratings of HVAC equipment when installed under conditions different from the conditions used to rate equipment performance. To calculate system effects for air systems, use tables and charts found in AMCA 201, "Fans and Systems," or in SMACNA's "HVAC Systems - Duct Design." Compare results with the design data and installed conditions.

F. Examine system and equipment installations and verify that field quality-control testing, cleaning, and adjusting specified in individual Sections have been performed.

G. Examine test reports specified in individual system and equipment Sections.

H. Examine HVAC equipment and verify that bearings are greased, belts are aligned and tight, and equipment with functioning controls is ready for operation.

I. Examine operating safety interlocks and controls on HVAC equipment.

J. Report deficiencies discovered before and during performance of TAB procedures. Observe and record system reactions to changes in conditions. Record default set points if different from indicated values.

3.2 PREPARATION

A. Prepare a TAB plan that includes strategies and step-by-step procedures.

B. Complete system-readiness checks and prepare reports. Verify the following:

1. Permanent electrical-power wiring is complete.
2. Automatic temperature-control systems are operational.
3. Equipment and duct access doors are securely closed.
4. Balance, smoke, and fire dampers are open.
5. Ceilings are installed in critical areas where air-pattern adjustments are required and access to balancing devices is provided.
6. Windows and doors can be closed so indicated conditions for system operations can be met.

3.3 GENERAL PROCEDURES FOR TESTING AND BALANCING

A. Perform testing and balancing procedures on each system according to the procedures contained in AABC's "National Standards for Total System Balance" and SMACNA's "HVAC Systems - Testing, Adjusting, and Balancing" and in this Section.

B. Cut insulation, ducts, pipes, and equipment cabinets for installation of test probes to the minimum extent necessary for TAB procedures.

1. After testing and balancing, patch probe holes in ducts with same material and thickness as used to construct ducts.

C. Mark equipment and balancing devices, including damper-control positions, valve position indicators, fan-speed-control levers, and similar controls and devices, with paint or other suitable, permanent identification material to show final settings.

D. Take and report testing and balancing measurements in inch-pound (IP) units.

3.4 GENERAL PROCEDURES FOR BALANCING AIR SYSTEMS

A. Prepare test reports for both fans and outlets. Obtain manufacturer's outlet factors and recommended testing procedures. Crosscheck the summation of required outlet volumes with required fan volumes.

B. Prepare schematic diagrams of systems' "as-built" duct layouts.

C. Determine the best locations in main and branch ducts for accurate duct-airflow measurements.

D. Locate start-stop and disconnect switches, electrical interlocks, and motor starters.

E. Verify that motor starters are equipped with properly sized thermal protection.

F. Check dampers for proper position to achieve desired airflow path.

G. Check for airflow blockages.

H. Verify that air duct system is sealed as specified in Section 23 3113 "Metal Ducts."

3.5 PROCEDURES FOR CONSTANT-VOLUME AIR SYSTEMS

A. Adjust fans to deliver total indicated airflows within the maximum allowable fan speed listed by fan manufacturer.

1. Measure total airflow.

a. Where sufficient space in ducts is unavailable for Pitot-tube traverse measurements, measure airflow at terminal outlets and inlets and calculate the total airflow.

2. Measure fan static pressures as follows to determine actual static pressure:

a. Measure outlet static pressure as far downstream from the fan as practical and upstream from restrictions in ducts such as elbows and transitions.
b. Measure static pressure directly at the fan outlet or through the flexible connection.
c. Measure inlet static pressure of single-inlet fans in the inlet duct as near the fan as possible, upstream from the flexible connection, and downstream from duct restrictions.

3. Do not make fan-speed adjustments that result in motor overload. Consult equipment manufacturers about fan-speed safety factors. Modulate dampers and measure fan-motor amperage to ensure that no overload will occur. Measure amperage in full-cooling, full-heating, economizer, and any other operating mode to determine the maximum required brake horsepower.

B. Adjust volume dampers for main duct, submain ducts, and major branch ducts to indicated airflows within specified tolerances.

1. Measure airflow of submain and branch ducts.

a. Where sufficient space in submain and branch ducts is unavailable for Pitot-tube traverse measurements, measure airflow at terminal outlets and inlets and calculate the total airflow for that zone.

2. Measure static pressure at a point downstream from the balancing damper, and adjust volume dampers until the proper static pressure is achieved.
3. Remeasure each submain and branch duct after all have been adjusted. Continue to adjust submain and branch ducts to indicated airflows within specified tolerances.

C. Measure air outlets and inlets without making adjustments.

1. Measure terminal outlets using a direct-reading hood or outlet manufacturer's written instructions and calculating factors.

D. Adjust air outlets and inlets for each space to indicated airflows within specified tolerances of indicated values. Make adjustments using branch volume dampers rather than extractors and the dampers at air terminals.

1. Adjust each outlet in same room or space to within specified tolerances of indicated quantities without generating noise levels above the limitations prescribed by the Contract Documents.
2. Adjust patterns of adjustable outlets for proper distribution without drafts.

3.6 PROCEDURES FOR VARIABLE-AIR-VOLUME SYSTEMS

A. Compensating for Diversity: When the total airflow is more than the indicated airflow of the fan, place a selected number of volume dampers at a maximum set-point airflow condition until the total airflow equals the indicated airflow of the fan. Select the reduced airflow dampers so they are distributed evenly among the branch ducts.

3.7 PROCEDURES FOR MOTORS

A. Motors, 1/2 HP and Larger: Test at final balanced conditions and record the following data:

1. Manufacturer's name, model number, and serial number.
2. Motor horsepower rating.
3. Motor rpm.
4. Efficiency rating.
5. Nameplate and measured voltage, each phase.
6. Nameplate and measured amperage, each phase.
7. Starter thermal-protection-element rating.

3.8 TOLERANCES

A. Set HVAC system's air flow rates and water flow rates within the following tolerances:

1. Supply, Return, and Exhaust Fans and Equipment with Fans: Zero to plus 10 percent.
2. Air Outlets and Inlets: Plus or minus 10 percent.

3.9 REPORTING

A. Initial Construction-Phase Report: Based on examination of the Contract Documents as specified in "Examination" Article, prepare a report on the adequacy of design for systems' balancing devices. Recommend changes and additions to systems' balancing devices to facilitate proper performance measuring and balancing. Recommend changes and additions to HVAC systems and general construction to allow access for performance measuring and balancing devices.

3.10 FINAL REPORT

A. General: Prepare a certified written report; tabulate and divide the report into separate sections for tested systems and balanced systems.

1. Include a certification sheet at the front of the report's binder, signed and sealed by the certified testing and balancing engineer.
2. Include a list of instruments used for procedures, along with proof of calibration.

B. Final Report Contents: In addition to certified field-report data, include the following:

1. Fan curves.
2. Manufacturers' test data.
3. Field test reports prepared by system and equipment installers.
4. Other information relative to equipment performance; do not include Shop Drawings and product data.

C. General Report Data: In addition to form titles and entries, include the following data:

1. Title page.
2. Name and address of the TAB contractor.
3. Project name.
4. Project location.
5. Architect's name and address.
6. Engineer's name and address.
7. Contractor's name and address.
8. Report date.
9. Signature of TAB supervisor who certifies the report.
10. Table of Contents with the total number of pages defined for each section of the report. Number each page in the report.
11. Summary of contents including the following:

    a. Indicated versus final performance.
    b. Notable characteristics of systems.
    c. Description of system operation sequence if it varies from the Contract Documents.

12. Nomenclature sheets for each item of equipment.
13. Notes to explain why certain final data in the body of reports vary from indicated values.
14. Test conditions for fans performance forms including the following:

    a. Settings for dampers.
    b. Other system operating conditions that affect performance.

D. System Diagrams: Include schematic layouts of air distribution systems. Present each system with single-line diagram and include the following:

1. Quantities of make-up and exhaust airflows.
2. Duct, outlet, and inlet sizes.
3. Position of balancing devices.

E. Fan Test Reports: For make-up and exhaust fans, include the following:

1. Fan Data:

    a. System identification.
    b. Location.
    c. Make and type.
    d. Model number and size.
    e. Manufacturer's serial number.
    f. Arrangement and class.

g. Sheave make, size in inches (mm), and bore.
h. Center-to-center dimensions of sheave, and amount of adjustments in inches (mm).

2. Motor Data:

a. Motor make, and frame type and size.
b. Horsepower and rpm.
c. Volts, phase, and hertz.
d. Full-load amperage and service factor.
e. Sheave make, size in inches (mm), and bore.
f. Center-to-center dimensions of sheave, and amount of adjustments in inches (mm).
g. Number, make, and size of belts.

3. Test Data (Indicated and Actual Values):

a. Total airflow rate in cfm (L/s).
b. Total system static pressure in inches wg (Pa).
c. Fan rpm.
d. Discharge static pressure in inches wg (Pa).
e. Suction static pressure in inches wg (Pa).

F. Round and Rectangular Duct Traverse Reports: Include a diagram with a grid representing the duct cross-section and record the following:

1. Report Data:

a. System and air-handling-unit number.
b. Location and zone.
c. Traverse air temperature in deg F (deg C).
d. Duct static pressure in inches wg (Pa).
e. Duct size in inches (mm).
f. Duct area in sq. ft. (sq. m).
g. Indicated air flow rate in cfm (L/s).
h. Indicated velocity in fpm (m/s).
i. Actual air flow rate in cfm (L/s).
j. Actual average velocity in fpm (m/s).
k. Barometric pressure in psig (Pa).

3.11 INSPECTIONS

A. Initial Inspection:

1. After testing and balancing are complete, operate each system and randomly check measurements to verify that the system is operating according to the final test and balance readings documented in the final report.
2. Check the following for each system:

a. Measure airflow of all air outlets.
b. Verify that balancing devices are marked with final balance position.
c. Note deviations from the Contract Documents in the final report.

B. Final Inspection:

1. After initial inspection is complete and documentation by random checks verifies that testing and balancing are complete and accurately documented in the final report, request that a final inspection be made by the COTR.
2. The TAB contractor's test and balance engineer shall conduct the inspection in the presence of the COTR.
3. The COTR shall randomly select measurements, documented in the final report, to be rechecked. Rechecking shall be limited to either 10 percent of the total measurements recorded or the extent of measurements that can be accomplished in a normal 8-hour business day.
4. If rechecks yield measurements that differ from the measurements documented in the final report by more than the tolerances allowed, the measurements shall be noted as "FAILED."
5. If the number of "FAILED" measurements is greater than 10 percent of the total measurements checked during the final inspection, the testing and balancing shall be considered incomplete and shall be rejected.

C. TAB Work will be considered defective if it does not pass final inspections. If TAB Work fails, proceed as follows:

1. Recheck all measurements and make adjustments. Revise the final report and balancing device settings to include all changes; resubmit the final report and request a second final inspection.
2. If the second final inspection also fails, Owner may contract the services of another TAB contractor to complete TAB Work according to the Contract Documents and deduct the cost of the services from the original TAB contractor's final payment.

D. Prepare test and inspection reports.

END OF SECTION 23 0593

SECTION 23 0700 – MECHANICAL INSULATION

PART 1 - GENERAL

1.1 RELATED DOCUMENTS

A. Drawings and general provisions of the Contract, including General and Supplementary Conditions and Division 01 Specification Sections, apply to this Section.

1.2 SUMMARY

A. This Section includes mechanical insulation for boiler breeching, duct, equipment, and pipe, including the following:
   1. Insulation Materials:
      a. Mineral fiber.
   2. Adhesives.
   3. Mastics.
   4. Sealants.
   5. Factory-applied jackets.
   6. Field-applied cloths.
   7. Field-applied jackets.
   8. Tapes.
   9. Securements.
   10. Corner angles.

B. Related Sections include the following:
   1. Division 23 Section "Metal Ducts" for duct liners.

1.3 DEFINITIONS

A. ASJ: All-service jacket.

B. FSK: Foil, scrim, Kraft paper.

C. FSP: Foil, scrim, polyethylene.

D. PVDC: Polyvinylidene chloride.

E. SSL: Self-sealing lap.

1.4 SUBMITTALS

A. Product Data: For each type of product indicated, identify thermal conductivity, thickness, and jackets (both factory and field applied, if any).

B. Shop Drawings: Show details for the following:
   1. Application of protective shields, saddles, and inserts at hangers for each type of insulation and hanger.
   2. Insulation application at elbows, fittings, flanges, valves, and specialties for each type of insulation.

3. Removable insulation at piping specialties, equipment connections, and access panels.
4. Application of field-applied jackets.
5. Application at linkages of control devices.
6. Field application for each equipment type.

C. Material Test Reports: From a qualified testing agency acceptable to authorities having jurisdiction indicating, interpreting, and certifying test results for compliance of insulation materials, sealers, attachments, cements, and jackets, with requirements indicated. Include dates of tests and test methods employed.

D. Field quality-control inspection reports.

1.5 QUALITY ASSURANCE

A. Installer Qualifications: Skilled mechanics who have successfully completed an apprenticeship program or another craft training program certified by the Department of Labor, Bureau of Apprenticeship and Training.

B. Fire-Test-Response Characteristics: Insulation and related materials shall have fire-test-response characteristics indicated, as determined by testing identical products per ASTM E 84, by a testing and inspecting agency acceptable to authorities having jurisdiction. Factory label insulation and jacket materials and adhesive, mastic, and cement material containers, with appropriate markings of applicable testing and inspecting agency.
1. Insulation Installed Indoors: Flame-spread index of 25 or less, and smoke-developed index of 50 or less.
2. Insulation Installed Outdoors: Flame-spread index of 75 or less, and smoke-developed index of 150 or less.

C. Insulation materials shall be tested and rated according to ASTM Test Method C-177 to determine k-factors.

1.6 DELIVERY, STORAGE, AND HANDLING

A. Packaging: Insulation material containers shall be marked by manufacturer with appropriate ASTM standard designation, type and grade, and maximum use temperature.

B. Protect all insulating materials from dirt, water and damage during storage and installation. Remove damaged, wet or otherwise unsatisfactory insulation at Architect’s direction.

1.7 COORDINATION

A. Coordinate size and location of supports, hangers, and insulation shields specified in Division 23 Section "Hangers and Supports for Mechanical Piping and Equipment."

B. Coordinate clearance requirements with piping Installer for piping insulation application, duct Installer for duct insulation application, and equipment Installer for equipment insulation application. Before preparing piping and ductwork Shop Drawings, establish and maintain clearance requirements for installation of insulation and field-applied jackets and finishes and for space required for maintenance.

C. Coordinate installation and testing of heat tracing, where applicable.

1.8 SCHEDULING

A. Schedule insulation application after pressure testing systems. Insulation application may begin on segments that have satisfactory test results.

PART 2 - PRODUCTS

2.1 MANUFACTURERS

A. In other Part 2 articles where titles below introduce lists, the following requirements apply to product selection:
   1. Products: Subject to compliance with requirements, provide one of the products specified.
   2. Manufacturers: Subject to compliance with requirements, provide products by one of the manufacturers specified.

2.2 INSULATION MATERIALS

A. Refer to Part 3 schedule articles for requirements about where insulating materials shall be applied.

B. Products shall not contain asbestos, lead, mercury, or mercury compounds.

C. Products that come in contact with stainless steel shall have a leachable chloride content of less than 50 ppm when tested according to ASTM C 871.

D. Insulation materials for use on austenitic stainless steel shall be qualified as acceptable according to ASTM C 795.

E. Foam insulation materials shall not use CFC or HCFC blowing agents in the manufacturing process.

F. Mineral-Fiber Board Insulation: Mineral or glass fibers bonded with a thermosetting resin. Comply with ASTM C 612, Type IA or Type IB. For duct and plenum applications, provide insulation with factory-applied FSK jacket. For equipment applications, provide insulation with factory-applied ASJ. Factory-applied jacket requirements are specified in Part 2 "Factory-Applied Jackets" Article.
   1. Products:
      a. CertainTeed Corp.; Commercial Board.
      b. Johns Manville; 800 Series Spin-Glas, Type 814.
      c. Knauf Insulation; Insulation Board.
      d. Owens Corning; Fiberglas 700 Series.
   2. Maximum K-Factor: 0.23 at 75 deg. F. mean temperature.
   3. Minimum Density: 3.0 pounds per cubic foot.

G. Mineral-Fiber, Preformed Pipe Insulation:
   1. Products:
      a. Johns Manville; Micro-Lok.

b. Knauf Insulation; 1000 (Pipe Insulation).
c. Owens Corning; Fiberglas Pipe Insulation.

2. Type I, 850 deg F Materials: Mineral or glass fibers bonded with a thermosetting resin. Comply with ASTM C 547, Type I, Grade A, with factory-applied ASJ-SSL. Factory-applied jacket requirements are specified in Part 2 "Factory-Applied Jackets" Article.
3. Type II, 1200 deg F Materials: Mineral or glass fibers bonded with a thermosetting resin. Comply with ASTM C 547, Type II, Grade A, with factory-applied ASJ-SSL. Factory-applied jacket requirements are specified in Part 2 "Factory-Applied Jackets" Article.
4. Maximum K-Factor: 0.23 at 75 deg. F mean temperature; 0.34 at 250 deg. F mean temperature.

2.3 ADHESIVES

A. Materials shall be compatible with insulation materials, jackets, and substrates and for bonding insulation to itself and to surfaces to be insulated, unless otherwise indicated.

B. Mineral-Fiber Adhesive: Comply with MIL-A-3316C, Class 2, Grade A.

C. ASJ Adhesive, and FSK Jacket Adhesive: Comply with MIL-A-3316C, Class 2, Grade A for bonding insulation jacket lap seams and joints.

D. PVC Jacket Adhesive: Compatible with PVC jacket.

2.4 MASTICS

A. Materials shall be compatible with insulation materials, jackets, and substrates; comply with MIL-C-19565C, Type II.

B. Vapor-Barrier Mastic: Water based; suitable for indoor and outdoor use on below ambient services.
1. Products:
a. Childers Products, Division of ITW; CP-35.
b. Foster Products Corporation, H. B. Fuller Company; 30-90.
c. ITW TACC, Division of Illinois Tool Works; CB-50.
d. Marathon Industries, Inc.; 590.
e. Mon-Eco Industries, Inc.; 55-40.
f. Vimasco Corporation; 749.

2. Water-Vapor Permeance: ASTM E 96, Procedure B, 0.013 perm at 43-mil dry film thickness.
3. Service Temperature Range: Minus 20 to plus 180 deg F.
4. Solids Content: ASTM D 1644, 59 percent by volume and 71 percent by weight.
5. Color: White.

C. Breather Mastic: Water based; suitable for indoor and outdoor use on above ambient services.
1. Products:
a. Childers Products, Division of ITW; CP-10.
b. Foster Products Corporation, H. B. Fuller Company; 35-00.
c. ITW TACC, Division of Illinois Tool Works; CB-05/15.
d. Marathon Industries, Inc.; 550.

e. Mon-Eco Industries, Inc.; 55-50.
f. Vimasco Corporation; WC-1/WC-5.

2. Water-Vapor Permeance: ASTM F 1249, 3 perms at 0.0625-inch dry film thickness.
3. Service Temperature Range: Minus 20 to plus 200 deg F.
4. Solids Content: 63 percent by volume and 73 percent by weight.
5. Color: White.

2.5 SEALANTS

A. Joint Sealants:
1. Materials shall be compatible with insulation materials, jackets, and substrates.
2. Permanently flexible, elastomeric sealant.
3. Service Temperature Range: Minus 100 to plus 300 deg F.
4. Color: White or gray.

B. ASJ Flashing Sealants, and Vinyl, and PVC Jacket Flashing Sealants:
1. Products:
a. Childers Products, Division of ITW; CP-76.
2. Materials shall be compatible with insulation materials, jackets, and substrates.
3. Fire- and water-resistant, flexible, elastomeric sealant.
4. Service Temperature Range: Minus 40 to plus 250 deg F.
5. Color: White.

2.6 FACTORY-APPLIED JACKETS

A. Insulation system schedules indicate factory-applied jackets on various applications. When factory-applied jackets are indicated, comply with the following:
1. ASJ: White, Kraft-paper, fiberglass-reinforced scrim with aluminum-foil backing; complying with ASTM C 1136, Type I.
2. ASJ-SSL: ASJ with self-sealing, pressure-sensitive, acrylic-based adhesive covered by a removable protective strip; complying with ASTM C 1136, Type I.
3. FSK Jacket: Aluminum-foil, fiberglass-reinforced scrim with Kraft-paper backing; complying with ASTM C 1136, Type II.

2.7 FIELD-APPLIED CLOTHS

A. Woven Glass-Fiber Fabric: Comply with MIL-C-20079H, Type I, plain weave, and presized a minimum of 8 oz./sq. yd..
1. Products:
a. Alpha Associates, Inc.; Alpha-Maritex 84215 and 84217/9485RW, Luben 59.

2.8 FIELD-APPLIED JACKETS

A. Field-applied jackets shall comply with ASTM C 921, Type I, unless otherwise indicated.

B. PVC Jacket: High-impact-resistant, UV-resistant PVC complying with ASTM D 1784, Class 16354-C; 20 mil thickness; roll stock ready for shop or field cutting and forming.
1. Products:
a. Johns Manville; Zeston.
b. P.I.C. Plastics, Inc.; FG Series.

c. Proto PVC Corporation; LoSmoke.
d. Speedline Corporation; SmokeSafe.
2. Color: White.
3. Factory-fabricated fitting covers to match jacket if available; otherwise, field fabricate.
a. Shapes: 45- and 90-degree, short- and long-radius elbows, tees, valves, flanges, unions, reducers, end caps, soil-pipe hubs, traps and mechanical joints minimum 20 mil thickness.
4. Factory-fabricated tank heads and tank side panels.

2.9 TAPES

A. ASJ Tape: White vapor-retarder tape matching factory-applied jacket with acrylic adhesive, complying with ASTM C 1136 and UL listed.
1. Products:
a. Avery Dennison Corporation, Specialty Tapes Division; Fasson 0835.
b. Compac Corp.; 104 and 105.
c. Ideal Tape Co., Inc., an American Biltrite Company; 428 AWF ASJ.
d. Venture Tape; 1540 CW Plus, 1542 CW Plus, and 1542 CW Plus/SQ.
2. Width: 3 inches.
3. Thickness: 11.5 mils.
4. Adhesion: 90 ounces force/inch in width.
5. Elongation: 2 percent.
6. Tensile Strength: 40 lbf/inch in width.
7. ASJ Tape Disks and Squares: Precut disks or squares of ASJ tape.

B. FSK Tape: Foil-face, vapor-retarder tape matching factory-applied jacket with acrylic adhesive; complying with ASTM C 1136 and UL listed.
1. Products:
a. Avery Dennison Corporation, Specialty Tapes Division; Fasson 0827.
b. Compac Corp.; 110 and 111.
c. Ideal Tape Co., Inc., an American Biltrite Company; 491 AWF FSK.
d. Venture Tape; 1525 CW, 1528 CW, and 1528 CW/SQ.
2. Width: 3 inches.
3. Thickness: 6.5 mils.
4. Adhesion: 90 ounces force/inch in width.
5. Elongation: 2 percent.
6. Tensile Strength: 40 lbf/inch in width.
7. FSK Tape Disks and Squares: Precut disks or squares of FSK tape.

C. PVC Tape: White vapor-retarder tape matching field-applied PVC jacket with acrylic adhesive. Suitable for indoor and outdoor applications.
1. Products:
a. Avery Dennison Corporation, Specialty Tapes Division; Fasson 0555.
b. Compac Corp.; 130.
c. Ideal Tape Co., Inc., an American Biltrite Company; 370 White PVC tape.
d. Venture Tape; 1506 CW NS.
2. Width: 2 inches.
3. Thickness: 6 mils.
4. Adhesion: 64 ounces force/inch in width.
5. Elongation: 500 percent.

6. Tensile Strength: 18 lbf/inch in width.

2.10 SECUREMENTS

A. Bands:
1. Products:
   a. Childers Products; Bands.
   b. PABCO Metals Corporation; Bands.
   c. RPR Products, Inc.; Bands.
2. Stainless Steel: ASTM A 167 or ASTM A 240/A 240M, Type 316; 0.015 inch thick, 3/4 inch wide with wing or closed seal.
3. Aluminum: ASTM B 209, Alloy 3003, 3005, 3105, or 5005; Temper H-14, 0.020 inch thick, 3/4 inch wide with wing or closed seal.
4. Springs: Twin spring set constructed of stainless steel with ends flat and slotted to accept metal bands. Spring size determined by manufacturer for application.

B. Insulation Pins and Hangers:
1. Capacitor-Discharge-Weld Pins: Copper- or zinc-coated steel pin, fully annealed for capacitor-discharge welding, 0.135-inch- diameter shank, length to suit depth of insulation indicated.
   a. Products:
      1) AGM Industries, Inc.; CWP-1.
      2) GEMCO; CD.
      3) Midwest Fasteners, Inc.; CD.
      4) Nelson Stud Welding; TPA, TPC, and TPS.
2. Cupped-Head, Capacitor-Discharge-Weld Pins: Copper- or zinc-coated steel pin, fully annealed for capacitor-discharge welding, 0.135-inch- diameter shank, length to suit depth of insulation indicated with integral 1-1/2-inch galvanized carbon-steel washer.
   a. Products:
      1) AGM Industries, Inc.; CWP-1.
      2) GEMCO; Cupped Head Weld Pin.
      3) Midwest Fasteners, Inc.; Cupped Head.
      4) Nelson Stud Welding; CHP.
3. Metal, Adhesively Attached, Perforated-Base Insulation Hangers: Baseplate welded to projecting spindle that is capable of holding insulation, of thickness indicated, securely in position indicated when self-locking washer is in place. Comply with the following requirements:
   a. Products:
      1) AGM Industries, Inc.; Tactoo Insul-Hangers, Series T.
      2) GEMCO; Perforated Base.
      3) Midwest Fasteners, Inc.; Spindle.
   b. Baseplate: Perforated, galvanized carbon-steel sheet, 0.030 inch thick by 2 inches square.
   c. Spindle: Copper- or zinc-coated, low carbon steel, fully annealed, 0.106-inch-diameter shank, length to suit depth of insulation indicated.
   d. Adhesive: Recommended by hanger manufacturer. Product with demonstrated capability to bond insulation hanger securely to substrates indicated without damaging insulation, hangers, and substrates.
4. Nonmetal, Adhesively Attached, Perforated-Base Insulation Hangers: Baseplate fastened to projecting spindle that is capable of holding insulation, of thickness indicated, securely

in position indicated when self-locking washer is in place. Comply with the following requirements:

a. Products:
   1) GEMCO; Nylon Hangers.
   2) Midwest Fasteners, Inc.; Nylon Insulation Hangers.

b. Baseplate: Perforated, nylon sheet, 0.030 inch thick by 1-1/2 inches in diameter.

c. Spindle: Nylon, 0.106-inch- diameter shank, length to suit depth of insulation indicated, up to 2-1/2 inches.

d. Adhesive: Recommended by hanger manufacturer. Product with demonstrated capability to bond insulation hanger securely to substrates indicated without damaging insulation, hangers, and substrates.

5. Insulation-Retaining Washers: Self-locking washers formed from 0.016-inch- thick, galvanized-steel sheet, with beveled edge sized as required to hold insulation securely in place but not less than 1-1/2 inches in diameter.

a. Products:
   1) AGM Industries, Inc.; RC-150.
   2) GEMCO; R-150.
   3) Midwest Fasteners, Inc.; WA-150.
   4) Nelson Stud Welding; Speed Clips.

b. Protect ends with capped self-locking washers incorporating a spring steel insert to ensure permanent retention of cap in exposed locations.

6. Nonmetal Insulation-Retaining Washers: Self-locking washers formed from 0.016-inch-thick nylon sheet, with beveled edge sized as required to hold insulation securely in place but not less than 1-1/2 inches in diameter.

a. Manufacturers:
   1) GEMCO.
   2) Midwest Fasteners, Inc.

C. Staples: Outward-clinching insulation staples, nominal 3/4-inch- wide, stainless steel or Monel.

D. Wire: 0.062-inch soft-annealed, stainless steel.

1. Manufacturers:
   a. ACS Industries, Inc.
   b. C & F Wire.
   c. Childers Products.
   d. PABCO Metals Corporation.
   e. RPR Products, Inc.

2.11 CORNER ANGLES

A. Aluminum Corner Angles: 0.040 inch thick, minimum 1 by 1 inch, aluminum according to ASTM B 209, Alloy 3003, 3005, 3105 or 5005; Temper H-14.

B. Stainless-Steel Corner Angles: 0.024 inch thick, minimum 1 by 1 inch, stainless steel according to ASTM A 167 or ASTM A 240/A 240M, Type 304 or 316.

PART 3 - EXECUTION

3.1 EXAMINATION

A. Examine substrates and conditions for compliance with requirements for installation and other conditions affecting performance of insulation application.
   1. Verify that systems and equipment to be insulated have been tested and are free of defects.
   2. Verify that surfaces to be insulated are clean and dry.
   3. Proceed with installation only after unsatisfactory conditions have been corrected.

3.2 PREPARATION

A. Surface Preparation: Clean and dry surfaces to receive insulation. Remove materials that will adversely affect insulation application.

B. Mix insulating cements with clean potable water; if insulating cements are to be in contact with stainless-steel surfaces, use demineralized water.

3.3 COMMON INSTALLATION REQUIREMENTS

A. Install insulation materials, accessories, and finishes with smooth, straight, and even surfaces; free of voids throughout the length of equipment, ducts and fittings, and piping including fittings, valves, and specialties.

B. Install insulation materials, forms, vapor barriers or retarders, jackets, and thicknesses required for each item of equipment, duct system, and pipe system as specified in insulation system schedules.

C. Install accessories compatible with insulation materials and suitable for the service. Install accessories that do not corrode, soften, or otherwise attack insulation or jacket in either wet or dry state.

D. Install insulation with longitudinal seams at top and bottom of horizontal runs.

E. Install multiple layers of insulation with longitudinal and end seams staggered.

F. Do not weld brackets, clips, or other attachment devices to piping, fittings, and specialties.

G. Keep insulation materials dry during application and finishing.

H. Install insulation with tight longitudinal seams and end joints. Bond seams and joints with adhesive recommended by insulation material manufacturer.

I. Install insulation with least number of joints practical.

J. Install insulation continuously through hangers and around anchor attachments.

K. Where vapor barrier is indicated, seal joints, seams, and penetrations in insulation at anchors and other projections with vapor-barrier mastic.

1. Install insulation continuously through hangers and around anchor attachments.
2. For insulation application where vapor barriers are indicated, extend insulation on anchor legs from point of attachment to supported item to point of attachment to structure. Taper and seal ends at attachment to structure with vapor-barrier mastic.
3. Install insert materials and install insulation to tightly join the insert. Seal insulation to insulation inserts with adhesive or sealing compound recommended by insulation material manufacturer.
4. Cover inserts with jacket material matching adjacent pipe insulation. Install shields over jacket, arranged to protect jacket from tear or puncture by hanger, support, and shield.

L. Apply adhesives, mastics, and sealants at manufacturer's recommended coverage rate and wet and dry film thicknesses.

M. Install insulation with factory-applied jackets as follows:
1. Draw jacket tight and smooth.
2. Cover circumferential joints with 3-inch- wide strips, of same material as insulation jacket. Secure strips with adhesive and outward clinching staples along both edges of strip, spaced 4 inches o.c.
3. Overlap jacket longitudinal seams at least 1-1/2 inches. Install insulation with longitudinal seams at bottom of pipe. Clean and dry surface to receive self-sealing lap. Staple laps with outward clinching staples along edge at 2 inches o.c.
   a. For below ambient services, apply vapor-barrier mastic over staples.
4. Cover joints and seams with tape as recommended by insulation material manufacturer to maintain vapor seal.
5. Where vapor barriers are indicated, apply vapor-barrier mastic on seams and joints and at ends adjacent to duct and pipe flanges and fittings.

N. Cut insulation in a manner to avoid compressing insulation more than 75 percent of its nominal thickness.

O. Finish installation with systems at operating conditions. Repair joint separations and cracking due to thermal movement.

P. Repair damaged insulation facings by applying same facing material over damaged areas. Extend patches at least 4 inches beyond damaged areas. Adhere, staple, and seal patches similar to butt joints.

Q. Replace insulation on existing piping, ductwork and equipment where indicated on the drawings. Match insulation type and thickness indicated by the insulation schedule at the end of this section.

R. Replace insulation on new and existing piping, ductwork and equipment where insulation is damaged during construction or removed for testing and balancing work.

3.4 PENETRATIONS

A. Insulation Installation at Interior Wall and Partition Penetrations (That Are Not Fire Rated): Install insulation continuously through walls and partitions.

B. Insulation Installation at Fire-Rated Wall and Partition Penetrations: Install insulation continuously through penetrations of fire-rated walls and partitions. Terminate insulation at fire damper sleeves for fire-rated wall and partition penetrations. Externally insulate damper sleeves to match adjacent insulation and overlap duct insulation at least 2 inches.

3.5 DUCT AND PLENUM INSULATION INSTALLATION

A. Blanket Insulation Installation on Ducts and Plenums: Secure with adhesive and insulation pins.
   1. Apply adhesives according to manufacturer's recommended coverage rates per unit area, for 100 percent coverage of duct and plenum surfaces.
   2. Apply adhesive to entire circumference of ducts and to all surfaces of fittings and transitions.
   3. Protect exposed corners with secured corner angles.
   4. Install either capacitor-discharge-weld pins and speed washers or cupped-head, capacitor-discharge-weld pins on sides and bottom of horizontal ducts and sides of vertical ducts as follows:
      a. On duct sides with dimensions 18 inches and smaller, place pins along longitudinal centerline of duct. Space 3 inches maximum from insulation end joints, and 16 inches o.c.
      b. On duct sides with dimensions larger than 18 inches, place pins 16 inches o.c. each way, and 3 inches maximum from insulation joints. Install additional pins to hold insulation tightly against surface at cross bracing.

3.6 GENERAL PIPE INSULATION INSTALLATION

A. Requirements in this Article generally apply to all insulation materials except where more specific requirements are specified in various pipe insulation material installation articles.

B. Insulation Installation on Fittings and Valves:
   1. Install insulation over fittings and valves, and other specialties with continuous thermal and vapor-retarder integrity, unless otherwise indicated.
   2. Insulate pipe elbows using preformed fitting insulation or mitered fittings made from same material and density as adjacent pipe insulation. Each piece shall be butted tightly against adjoining piece and bonded with adhesive. Fill joints, seams, voids, and irregular surfaces with insulating cement finished to a smooth, hard, and uniform contour that is uniform with adjoining pipe insulation.
   3. Insulate tee fittings with preformed fitting insulation or sectional pipe insulation of same material and thickness as used for adjacent pipe. Cut sectional pipe insulation to fit. Butt each section closely to the next and hold in place with tie wire. Bond pieces with adhesive.
   4. Cover segmented insulated surfaces with a layer of finishing cement and coat with a mastic. Install vapor-barrier mastic for below ambient services and a breather mastic for above ambient services. Reinforce the mastic with fabric-reinforcing mesh. Trowel the mastic to a smooth and well-shaped contour.
   5. For services not specified to receive a field-applied jacket except for flexible elastomeric, install fitted PVC cover over elbows, tees, strainers, valves, flanges, and unions. Terminate ends with PVC end caps. Tape PVC covers to adjoining insulation facing using PVC tape.

3.7 MINERAL-FIBER INSULATION INSTALLATION

A. Insulation Installation on Straight Pipes and Tubes:
   1. Secure each layer of preformed pipe insulation to pipe with wire or bands and tighten bands without deforming insulation materials.
   2. Where vapor barriers are indicated, seal longitudinal seams, end joints, and protrusions with vapor-barrier mastic and joint sealant.
   3. For insulation with factory-applied jackets on above ambient surfaces, secure laps with outward clinched staples at 6 inches o.c.
   4. For insulation with factory-applied jackets on below ambient surfaces, do not staple longitudinal tabs but secure tabs with additional adhesive as recommended by insulation material manufacturer and seal with vapor-barrier mastic and flashing sealant.

B. Insulation Installation on Pipe Fittings and Elbows:
   1. Install preformed sections of same material as straight segments of pipe insulation when available.
   2. When preformed insulation elbows and fittings are not available, install mitered sections of pipe insulation, to a thickness equal to adjoining pipe insulation. Secure insulation materials with wire or bands.

C. Board Insulation Installation on Ducts and Plenums: Secure with adhesive and insulation pins.
   1. Apply adhesives according to manufacturer's recommended coverage rates per unit area, for 100 percent coverage of duct and plenum surfaces.
   2. Apply adhesive to entire circumference of ducts and to all surfaces of fittings and transitions.
   3. Install either capacitor-discharge-weld pins and speed washers or cupped-head, capacitor-discharge-weld pins on sides and bottom of horizontal ducts and sides of vertical ducts as follows:
      a. On duct sides with dimensions 18 inches and smaller, place pins along longitudinal centerline of duct. Space 3 inches maximum from insulation end joints, and 16 inches o.c.
      b. On duct sides with dimensions larger than 18 inches, space pins 16 inches o.c. each way, and 3 inches maximum from insulation joints. Install additional pins to hold insulation tightly against surface at cross bracing.
      c. Pins may be omitted from top surface of horizontal, rectangular ducts and plenums.
      d. Do not overcompress insulation during installation.
      e. Cut excess portion of pins extending beyond speed washers or bend parallel with insulation surface. Cover exposed pins and washers with tape matching insulation facing.
   4. For ducts and plenums with surface temperatures below ambient, install a continuous unbroken vapor barrier. Create a facing lap for longitudinal seams and end joints with insulation by removing 2 inches (50 mm) from 1 edge and 1 end of insulation segment. Secure laps to adjacent insulation section with 1/2-inch (13-mm) outward-clinching staples, 1 inch (25 mm) o.c. Install vapor barrier consisting of factory- or field-applied jacket, adhesive, vapor-barrier mastic, and sealant at joints, seams, and protrusions.
      a. Repair punctures, tears, and penetrations with tape or mastic to maintain vapor-barrier seal.
      b. Install vapor stops for ductwork and plenums operating below 50 deg F (10 deg C) at 18-foot (5.5-m) intervals. Vapor stops shall consist of vapor-barrier mastic applied in a Z-shaped pattern over insulation face, along butt end of insulation, and

over the surface. Cover insulation face and surface to be insulated a width equal to 2 times the insulation thickness but not less than 3 inches (75 mm).

5. Install insulation on rectangular duct elbows and transitions with a full insulation section for each surface. Groove and score insulation to fit as closely as possible to outside and inside radius of elbows. Install insulation on round and flat-oval duct elbows with individually mitered gores cut to fit the elbow.
6. Insulate duct stiffeners, hangers, and flanges that protrude beyond insulation surface with 6-inch- wide strips of same material used to insulate duct. Secure on alternating sides of stiffener, hanger, and flange with pins spaced 6 inches o.c.

3.8 FIELD-APPLIED JACKET INSTALLATION

A. Where glass-cloth jackets are indicated, install directly over bare insulation or insulation with factory-applied jackets.
   1. Draw jacket smooth and tight to surface with 2-inch overlap at seams and joints.
   2. Embed glass cloth between two 0.062-inch- thick coats of lagging adhesive.
   3. Completely encapsulate insulation with coating, leaving no exposed insulation.

B. Where PVC jackets are indicated, install with 1-inch overlap at longitudinal seams and end joints; for horizontal applications, install with longitudinal seams along top and bottom of tanks and vessels. Seal with manufacturer's recommended adhesive.
   1. Apply two continuous beads of adhesive to seams and joints, one bead under lap and the finish bead along seam and joint edge.

3.9 FINISHES

A. Duct, Equipment, and Pipe Insulation with ASJ, Glass-Cloth, or Other Paintable Jacket Material: Refer to Division 09 painting Sections.

B. Color: Final color as selected by Architect. Vary first and second coats to allow visual inspection of the completed Work.

C. Do not field paint aluminum or stainless-steel jackets.

3.10 INSULATION APPLICATION SCHEDULE

A. Acceptable insulation materials, thickness and vapor retarder requirements are identified for each application and size range. If more than one material is listed for an application and size range, selection from the materials listed is Contractor’s option.

B. Items Not Insulated: Unless otherwise indicated, do not install insulation on the following:
   1. Fire-suppression piping.
   2. Exhaust ductwork.
   3. Factory-insulated flexible ducts.
   4. Factory-insulated plenums and casings.
   5. Flexible connectors.
   6. Vibration-control devices.
   7. Factory-insulated access panels and doors.

C. Where metal ducts are specified to have internal duct liner, the thickness of the external insulation may be reduced by one inch, except minimum duct external insulation thickness shall be 1 inch.

D. Provide removable, replaceable insulation plugs at manufacturer's equipment identification plates and at ASME pressure vessel plates on insulated equipment.

SERVICE	**INSULATION MATERIAL**	**INSULATION THICKNESS**	**VAPOR RETARDER REQUIRED**
RAINWATER CONDUCTORS (FIRST VERTICAL 4 FEET BELOW ROOF AND ALL HORIZONTAL)			
All sizes	Mineral Fiber	1"	Yes
SUPPLY AND MAKE-UP-AIR DUCTS AND PLENUMS (INCLUDING RELOCATED)			
Indoor Duty (Note 1)			
Generally	Mineral-Fiber Board	1-1/2"	Yes
In Mechanical Rooms	Mineral-Fiber Board	2"	Yes
EXHAUST-AIR DUCTS AND PLENUMS			
Between outdoors and exhaust air isolation dampers	Mineral-Fiber Board	2"	Yes

3.11 FIELD APPLIED JACKET APPLICATION SCHEDULE

SERVICE	FIELD APPLIED JACKET TYPE
Indoor, exposed insulated piping	PVC
Indoor, exposed insulated ductwork	Woven Glass Fiber Fabric

END OF SECTION 23 0700

SECTION 23 0900 - INSTRUMENTATION AND CONTROL FOR HVAC

PART 1 - GENERAL

1.1 RELATED DOCUMENTS

A. Drawings and general provisions of the Contract, including General and Supplementary Conditions and Division 01 Specification Sections, apply to this Section.

1.2 SUMMARY

A. This Section includes control equipment for HVAC systems and components, including control components not supplied with factory-wired controls.

1.3 DEFINITIONS

A. Beneficial Use: COTR's operators are able to use the system and receive reliable information in their normal work schedules for inputs and outputs in the automation system network.

B. DCP: Digital control panel.

C. DC: Direct-digital controls.

D. DPDT: Double-pole, double-throw.

E. DPST: Double-pole, single-throw.

F. LAN: Local area network.

G. MS/TP: Master-slave/token-passing.

H. PICS: Protocol Implementation Conformance Statement.

I. SPDT: Single-pole, double-throw.

J. SPST: Single-pole, single-throw.

1.4 SYSTEM DESCRIPTION

A. Control system consists of sensors, indicators, actuators, final control elements, interface equipment, other apparatus, accessories, and software connected to distributed controllers operating in multiuser, multitasking environment on token-passing network and programmed to control mechanical systems.

B. System shall be an extension of the existing Smithsonian Institution Siemens DDC System**.** Control sequences shall be initiated through a signal from the fire alarm system (smoke control panel).

1.5 SUBMITTALS

A. Product Data: Include manufacturer's technical literature for each control device. Indicate dimensions, capacities, performance characteristics, electrical characteristics, finishes for materials, and installation and startup instructions for each type of product indicated.

1. Each control device labeled with setting or adjustable range of control.

B. Shop Drawings: Detail equipment assemblies and indicate dimensions, weights, loads, required clearances, method of field assembly, components, and location and size of each field connection.

1. Schematic flow diagrams showing fans, dampers, and control devices.
2. Wiring Diagrams: Power, signal, and control wiring. Differentiate between manufacturer-installed and field-installed wiring.
3. Details of control panel faces, including controls, instruments, and labeling.
4. Written description of sequence of operation.
5. Schedule of dampers including size, leakage, pressure drop, and flow characteristics.
6. Listing of connected data points, including connected control unit and input device.
7. System graphics indicating monitored systems, data (connected and calculated) point addresses, and operator notations.
8. System configuration showing peripheral devices, batteries, power supplies, diagrams, modems, and interconnections.
9. Settings of control devices.
10. Lists of proposed devices and equipment for each system drawing.
11. Calculations for sizing dampers and actuators.

C. Software and Firmware Operational Documentation: Include the following:

1. Software operating and upgrade manuals.
2. Program Software Backup: On a magnetic media or compact disc, complete with data files.
3. Device address list.
4. Printout of software application and graphic screens.
5. Software license required by and installed for DDC workstations and control systems.

D. Software Upgrade Kit: For COTR to use in modifying software to suit future power system revisions or monitoring and control revisions.

E. Field Test Reports: Indicate and interpret test results for compliance with performance requirements.

F. Maintenance Data: For systems to include in maintenance manuals specified in Division 1. Include the following:

1. Maintenance instructions and lists of spare parts for each type of control device.
2. Interconnection wiring diagrams with identified and numbered system components and devices.
3. Keyboard illustrations and step-by-step procedures indexed for each operator function.

4. Inspection period, cleaning methods, cleaning materials recommended, and calibration tolerances.
5. Calibration records and list of set points.
6. Start-up, normal, and emergency operating procedures.
7. Names, addresses, and phone numbers of equipment suppliers, subcontractors, and manufacturer's field representatives.
8. List of parts required for one year of continuous operation. Include parts numbers and names, addresses, and phone numbers of supply sources.

G. Qualification Data: For firms and persons specified in "Quality Assurance" Article.

H. Project Record Documents: Record actual locations of control components. Revise Shop Drawings to reflect actual installation and operating sequences.

1.6 QUALITY ASSURANCE

A. Installer Qualifications: An experienced installer who is an authorized representative of the automatic control system manufacturer for both installation and maintenance of units required for this Project.

B. Manufacturer Qualifications: A firm experienced in manufacturing automatic temperature-control systems similar to those indicated for this Project and with a record of successful in-service performance.

C. Electrical Components, Devices, and Accessories: Listed and labeled as defined in NFPA 70, Article 100, by a testing agency acceptable to authorities having jurisdiction, and marked for intended use.

D. Comply with NFPA 90A, "Installation of Air Conditioning and Ventilation Systems."

E. Comply with ASHRAE 135 for DDC system control components.

1.7 WARRANTY

A. Special Warranty: During the warranty period the entire system shall be kept in proper operating condition and serviced at no additional cost to the COTR.
1. Corrective software modifications made during warranty service periods shall be updated on user documentation and on user and manufacturer archived software disks.

1.8 EXTRA MATERIALS

A. Furnish extra materials described below that match products installed and that are packaged with protective covering for storage and identified with labels describing contents.

B. Replacement Materials: One replacement relay mechanism for each unique damper motor and positioning relay.

C. Maintenance Materials: One set of any special tools required for operation, adjustment, resetting, or maintenance.

PART 2 - PRODUCTS

2.1 MANUFACTURERS

A. Manufacturers: Subject to compliance with requirements, provide products by one of the following:

1. Control Systems Components: As indicated in product articles.
2. Electric, Electronic, and DDC Systems:
   a. Siemens Building Technologies, Inc.

2.2 DDC EQUIPMENT

A. Operator Station: The existing remotely located central operator's workstation (OWS) shall be utilized to monitor, control, and interface with the ATC and fire alarm systems. The ATC contractor shall load software required on the existing operators workstation. The ATC contractor shall provide network engineering and support services to implement all features of the operator system software for the project. Provide hardware and software upgrades for the existing operators workstation as required to accommodate the project control features and functionality.

B. Application Software: Include the following:

1. Input/output capability from operator station.
2. Operator system access levels via software password.
3. Database creation and support.
4. Dynamic Color Graphic Displays: Color graphic floor plan displays, and system schematics for each piece of mechanical equipment, shall be provided as noted by the I/O Summary Sheets specified at the end of this section."
   a. System Selection/Penetration: The operator interface shall allow users to access the various system schematics and floor plans via a graphical penetration scheme, menu selection, or text-based commands.
   b. Data Displays: Dynamic temperature values, humidity values, flow values, and status indication shall be shown in their actual respective locations, and shall automatically update to represent current conditions without operator intervention.
   c. Windowing: The windowing environment of the PC Operator Workstation shall allow the user to simultaneously view several graphics at the same time to analyze total building operation, or to allow the display of a graphic associated with an alarm to be viewed without interrupting work in progress.
5. Alarm processing.
6. Event Processing: Detection and accommodation of single or multiple failures of either workstations, DDC panels or the network media. The network shall include provisions for automatically re-configuring itself to allow operational equipment to perform their designated functions as effectively as possible in the event of single or multiple failures.
7. Automatic restart of field equipment on restoration of power.
8. Data Collection:
   a. Message and alarm buffering to prevent information from being lost.
   b. Error detection, correction, and re-transmission to guarantee data integrity.
   c. Default device definition to prevent loss of alarms or data, and ensure alarms are reported as quickly as possible in the event an operator device does not respond.

9. Graphic Development on Workstation: Graphic generation software shall be provided to allow the user to add, modify, or delete system graphic displays.
    a. The ATC System contractor shall provide libraries of pre-engineered screens and symbols depicting standard (e.g. fans, dampers, etc.) and electrical symbols.
    b. The graphic development package shall use a mouse or similar pointing device in conjunction with a drawing program to allow the user to perform the following: define symbols; position and size symbols; define background screens; define connecting lines and curves; locate, orient and size descriptive text; define and display colors for all elements; and establish correlation between symbols or text and associated system points or other displays.
    c. Graphical displays can be created to represent any logical grouping of system points or calculated data based upon building function, mechanical system, building layout, or any other logical grouping of points which aids the operator in the analysis of the facility. To accomplish this, the user shall be able to build graphic displays that include point data from multiple DDC panels, including application specific controllers.
10. Maintenance management.

C. Local Control Units: Modular, multi-tasking, comprising processor board with electronically programmable, nonvolatile, read-only memory; and backup power source.

1. Provide controller UL listed for smoke evacuation.
2. Units monitor or control each input/output point; process information; and download from or upload to operator station, PC, mobile operator station, or DDC panel in the network.
3. Units shall be able to extend performance and capacity through the use of remote Local Control Units.
4. Stand-alone mode control functions operate regardless of network status. Functions include the following:
    a. Global communications.
    b. Discrete/digital, analog, and pulse input/output.
    c. Monitoring, controlling, or addressing data points.
    d. Control processes.
    e. Operator I/O.
5. Local operator interface provides for download from or upload to mobile operator station.
6. Units shall directly support the use of mobile operator station. The capabilities of the portable terminal shall include but not be limited to the following:
    a. Display temperatures.
    b. Display status.
    c. Display setpoints.
    d. Display control parameters.
    e. Override binary output control.
    f. Override analog setpoints.
    g. Modification of gain and offset constants.
7. Power fail Protection: System setpoints, proportional bands, control algorithms, and any other programmable parameters shall be stored such that a power failure of any duration does not necessitate reprogramming the controller.
8. Provide UPS.

D. LANs: Capacity for a minimum of 10 workstations connected to multiuser, multitasking environment with concurrent capability to access DDC network or control units. DDC system shall tap into existing.

E. Software: Update to latest version of software at Project completion. Include and implement the following capabilities from the control units:

1. Units of Measure: Inch-pound and SI (metric).
2. Control Algorithms: Pre-tested two position control, proportional control, proportional plus integral control, and proportional, integral, plus derivative control.
3. Programming Application Features: Include trend point, alarm messages, weekly scheduling, and interlocking.

F. Data Control:

1. The input/output summary tables specified at the end of this section show hardware devices required to be connected to the remote electronic panels, and the standard control software modules to be implemented. In addition, additional hardware and software required to accomplish the detailed sequence of operations specified shall be provided. The following also includes pseudo points required to be provided for display in logical groups and graphics. Commandable pseudo points shall be commandable directly from displays.
2. Each analog point shall have unique remote panel resident dual high and dual low limit alarm thresholds. Where specified, floating (a band above and below a setpoint) alarm limits shall be provided.
3. Each digital output shall have a software-associated monitored input. Any time the monitored input does not track it's associated command output within a programmable time interval, a "command failed" alarm shall be reported.
4. Unless otherwise specified or approved prior to bidding, the primary analog input and the analog output of each DDC loop shall be resident in a single remote panel containing the DDC algorithm, and shall function independent of any peer or mux communication links. Secondary (reset type) analog inputs may be received from the peer network, but approved default values and/or procedures shall be substituted in the DDC algorithm for this secondary input if network communications fail or if the secondary input becomes erroneous or invalid.

2.3 CONTROL PANELS

A. Local Control Panels: Unitized cabinet with suitable brackets for wall or floor mounting, located adjacent to each system under automatic control. Provide common keying for all panels.

1. Fabricate panels of 0.06-inch- thick, furniture-quality steel, or extruded-aluminum alloy, totally enclosed, with hinged doors and keyed lock and with manufacturer's standard shop-painted finish.
2. Panel-Mounted Equipment: Temperature and humidity controllers, relays, and automatic switches; except safety devices. Mount devices with adjustments accessible through front of panel.
3. Door-Mounted Equipment: Flush-mount (on hinged door) manual switches, including damper-positioning switches, changeover switches, thermometers, and gages.

4. Graphics: Color-coded graphic, laminated-plastic displays on doors, schematically showing system being controlled, with protective, clear plastic sheet bonded to entire door.
5. Isolate low voltage and line voltage terminals.

2.4 SENSORS

A. Status Inputs for Electric Motors: Current-sensing relay with current transformers; solid state type, adjustable and set to 175 percent of rated motor current, with the following characteristics:

1. Rating: 0 to 135 amps.
2. Sensor Voltage: Induced from monitored conductor
3. Supply Current: Induced from monitored conductor
4. Isolation: Minimum 600 VAC rms
5. Trip Set Point: Adjustable to ±7% of range
6. Zero Adjustment: None
7. Sealing: NEMA 12
8. Temperature Range: 15°C to 85°C
9. External Current Transformers: For loads exceeding 135 amps.

B. Electronic Damper Position Indication: Visual scale indicating percent of travel and 2- to 10-V dc, feedback signal.

C. Limit Switches: Minimum rating of 10 amps resistive at 120 VAC; two pole single or double throw; NEMA 3R enclosure; aluminum or stainless steel switch actuation rod; manufactured by Honeywell Micro-Switch, Cutler Hammer, or Allen Bradley.

D. Damper Blade End Switches: Momentary-type for monitoring the motion of the damper at a prescribed arc of rotation; hermetically sealed mercury type; one or two SPDT contact arrangement as required with current carrying characteristics of 4 amps at 120V AC; manufactured by Dwyer Mercoid or approved equal.

2.5 DAMPERS

A. Smoke Control Dampers: Refer to smoke control dampers in Section 233300 “Air Duct Accessories.”

2.6 MISCELLANEOUS DEVICES

A. Provide necessary relays, accumulators, valves, positioners, switches, transformers, etc. to make a complete and operable system.

B. Time Delay Relays: Delay-on-energize or delay-on-release as shown; select range for the application as specified and shown.

1. DPDT timed contacts with minimum continuous rating of 10 amps resistive at 120 VAC.
2. Coils rated for continuous duty at plus or minus 10 percent of nominal coil pilot voltage.
3. Manufacturers: Potter Brumfield, Magnecraft, Agastat, or Paragon.

C. Control Relays: Normally open (NO) or normally closed (NC) contacts and number of poles required to perform the indicated functions.

1. Contacts rated for no less than 110 percent of switched load, or a minimum continuous rating of 10 amps at 120 VAC.
2. Coils rated for continuous duty at 100 percent plus or minus 10 percent of the nominal coil pilot voltage.
3. Relays mounted within panels may be plastic encapsulated socket mounted type, or modular design with multiple convertible contacts, as required.
4. Relays located outside of panels shall be housed in enclosures rated for the intended location.
5. Manufacturers: Johnson Controls or approved equal.

D. Actuators:
1. Sizing:
   a. Dampers: Size for required running torque and 120 percent of the required full load opening torque.
2. Electric Motors: Size to operate with sufficient reserve power to provide smooth two-position action.
   a. Comply with requirements in Division 23 Section "Common Motor Requirements for HVAC Equipment."
   b. Permanent Split-Capacitor or Shaded-Pole Type: Gear trains completely oil immersed and sealed. Equip spring-return motors with integral spiral-spring mechanism in housings designed for easy removal for service or adjustment of limit switches, auxiliary switches, or feedback potentiometer.
   c. Provide Spring-Return motors for all dampers indicated to be either “Normally Open” or “Normally Closed”.
   d. Electrical Connection: Provide conduit fitting with minimum 3 feet of pre-wired electrical cable.
3. Electronic Damper Actuators: Direct-coupled type designed for minimum 60,000 full-stroke cycles at rated torque.
   a. Coupling: V-bolt and V-shaped, toothed cradle.
   b. Overload Protection: Electronic overload or digital rotation-sensing circuitry.
   c. Fail-Safe Operation: Mechanical, spring-return mechanism. Provide external, manual gear release on non-spring-return actuators. Provide manual override actuator to permit manual operation of valve in the event of failure of automatic actuator.
   d. Power Requirements (Two-Position Spring Return): 24-V ac.
   e. Proportional Signal: 2- to 10-V dc or 4 to 20 mA, and 2- to 10-V dc position feedback signal.
   f. Temperature Rating: Minus 22 to plus 122 deg F.
   g. Temperature Rating (Smoke Dampers): Minus 22 to plus 250 deg F
   h. Run Time: 30 seconds.
   i. Electrical Connection: Provide conduit fitting with minimum 3 feet of pre-wired electrical cable.

2.7 ELECTRICAL WIRING

A. General Wiring Requirements:

1. Wiring shall comply with the requirements of local and national electric codes and Division 26 specification requirements, and the requirements herein specified.
2. Electric wiring and wiring connections required for the installation of the ATC, as herein specified, shall be provided by this specification unless specifically shown or called for in other specifications.
   a. Control wiring shall include connections to control devices, interlock wiring, control relays, and minor power wiring to auxiliary components for major pieces of apparatus. Minor power wiring, 120 volts and below, shall include requirements for such equipment as damper motors, solenoid valves, and interconnecting wiring on apparatus that has not been factory installed. In general, control wiring that is not factory installed or provided under other Divisions shall be provided.
   b. Power wiring, for the purpose of this specification, shall be defined as follows: Wiring from the power source, i.e., panelboard, or motor control center, etc., to the disconnect switch or disconnect switch and starter including wiring from these switches to the apparatus.
3. Power for control devices, whether or not interlocked with motor operation, shall be obtained from a separate 120 VAC source at the ATC panel or where directed. The Contractor shall be permitted to wire one control relay or one solenoid air valve with maximum power draw of 50 VA, to derive pilot power directly from the motor starter control circuit. Devices are to be located remote and external from motor starter. Device wiring is to terminate on terminal blocks provided in motor starter compartments. No splices are permitted. Provide power wiring from the source to field mounted control devices and panels.
4. Coordinate with the work of others. The plans are diagrammatic only and are to be utilized as reference. Interconnection and coordination requirements necessary for a totally operational control system are the requirement of this Section.
5. Operate electric and electronic mechanical controls at maximum 120 volts or less. Provide voltage transformers and isolated relays where indicated or required for control systems that operate at voltage other than 120V ac.
6. Transformers other than those used in bridge circuits shall have primaries wound for the available current and secondaries wound for the correct control circuit voltage. Size to have capacity capable to operate simultaneously components served plus 25 percent overload for one hour. Enclose transformer in vented steel cabinet with conduit connections and provide disconnect switch on the primary side and fused cut-out on the secondary side.
7. Provide contactors, relays, and authority devices for control of single phase equipment.

B. Control Transmission Cabling:

1. Twisted, shielded-pair cable, rated for use in return air plenums.

2.8 SOURCE QUALITY CONTROL

A. Perform manufacturer's standard shop tests for each component.

PART 3 - EXECUTION

3.1 EXAMINATION

A. Verify that conditioned power supply is available to control units and operator workstation.

B. Verify that duct- and equipment-mounted devices and wiring are installed before proceeding with installation.

C. Examine areas and conditions under which control systems are to be installed. Do not proceed with work until unsatisfactory conditions have been corrected.

3.2 INSTALLATION

A. Install systems and materials in accordance with manufacturer's instructions and roughing-in drawings, and details on drawings.

B. Mount controllers at convenient locations and heights.

C. Install equipment level and plumb.

D. Install software in control units and operator workstation. Implement all features of programs to specified requirements and as appropriate to sequence of operation.

E. Connect and configure equipment and software to achieve sequence of operation specified.

F. Verify location of exposed control sensors with plans, room details, and COTR before installation. Generally, locate all 60 inches above the floor; align centerline with centerline of adjacent light switches.

1. Install averaging elements in ducts and plenums in crossing or zigzag pattern, supported by mechanical clips.

G. Install automatic dampers according to Division 23 Section "Air Duct Accessories."

H. Install damper motors on outside of duct in warm areas, not in locations exposed to outdoor temperatures.

I. Install labels and nameplates to identify control components according to Division 23 Section "Identification for Mechanical."

J. Install duct volume-control dampers according to Division 23 Sections specifying air ducts.

K. Mounting of Panels: Control panels shall be installed so that they are stable and fully supported throughout the entire panel, minimum one inch from the wall. Panels mounted on air system housings or ducts are not acceptable. Ensure that panels are free from obstructions to allow for ease of operation and maintenance.

L. Load and debug software required for an operational DDC System, including data base, operational parameters, and system control and application programs.

3.3 ELECTRICAL WIRING AND CONNECTION INSTALLATION

A. Install raceways, boxes, and cabinets according to Division 26 Section "Raceway and Boxes for Electrical Systems."

1. Minimum conduit size: 3/4 inch.

B. Install building wire and cable according to Division 26 Section "Low-Voltage Electrical Power Conductors and Cables."

C. Install control transmission cable according to industry standards and as follows:

1. Conceal cable, except in mechanical rooms and areas where other conduit and piping are exposed.
2. Install exposed cable in raceway.
   a. Utilize existing raceway, if available.
3. Install concealed cable in raceway.
   a. Utilize existing raceway, if available.
4. Bundle and harness multiconductor instrument cable in place of single cables where several cables follow a common path.
5. Fasten flexible conductors, bridging cabinets and doors, along hinge side; protect against abrasion. Tie and support conductors.
6. Number-code or color-code conductors for future identification and service of control system, except local individual room control cables.
7. No splices or kinks shall be permitted in control transmission cable. Terminations shall be on panel-mounted terminal strips.
8. Grounding shall be in accordance with ANSI C2. Ground wire shall be copper. Control cable, including communication links and sensor wiring, shall be grounded at only one point for the entire system. Sensor wiring ground wires shall be terminated at the DCP and connected to the communication link ground wire. Communication link ground wires shall be terminated and grounded at the CPU.
9. Power wiring shall not be routed through the same raceway as control transmission cable.
10. Cable carrying AC circuits sensitive to external field shall be shielded.

D. Control transformer furnished as an integral part of a starter shall not be used as a power source for additional control.

E. Starter disconnect or separate switch immediately adjacent to starter shall disconnect power from line voltage or 120 volt control wiring entering starter.

F. Controllers and Operators: Controls shall be designed to function properly with a power source voltage variation of plus or minus 10 percent.

3.4 CONNECTIONS

A. Ground equipment.

1. Tighten electrical connectors and terminals according to manufacturer's published torque-tightening values. If manufacturer's torque values are not indicated, use those specified in UL 486A and UL 486B.

3.5 FIELD QUALITY CONTROL

A. Manufacturer's Field Service: Engage a factory-authorized service representative to inspect field-assembled components and equipment installation, including electrical connections. Report results in writing.

1. Operational Test: After electrical circuitry has been energized, start units to confirm proper unit operation. Remove malfunctioning units, replace with new units, and retest.
2. Test and adjust controls and safeties. Replace damaged and malfunctioning controls and equipment, and retest.
3. Calibration test electronic controllers by disconnecting input sensors and stimulating operation with compatible signal generator.

B. Engage a factory-authorized service representative to perform startup service.

C. Replace damaged or malfunctioning controls and equipment.

1. Start, test, and adjust control systems.
2. Demonstrate compliance with requirements, including calibration and testing, and control sequences.
3. Adjust, calibrate, and fine tune circuits and equipment to achieve sequence of operation specified.

D. Place Building Automation System (BAS) in the required modes of operation as requested by the Testing and Balancing Contractor (TAB). Provide programming changes and reporting of data from the BAS needed to achieve proper performance.

E. Verify DDC as follows:

1. Verify software including automatic restart, control sequences, and scheduling.
2. Verify operation of operator workstation.
3. Verify local control units including self-diagnostics.

F. Initial Demonstration Test: Upon the completion of work, tests, and specific function demonstrations, and at a time agreed upon, operate the systems, in parts, for sufficient length of time but not less than 30 days to determine whether the systems as a whole are functioning properly.

1. Provide log identifying failures that occur. Indicate point name and number, time and date of failure, and time and date of return to service.

G. Final Demonstration Test: Before the systems are turned over to the COTR, provide final demonstration test of 48 continuous hours during which the systems shall operate without adjustment.

1. Provide trend log (3 samples per hour) for each analog point.

3.6 DEMONSTRATION

A. Engage a factory-authorized service representative to train COTR's maintenance personnel to adjust, operate, and maintain control systems and components.

1. Train COTR's maintenance personnel on procedures and schedules for starting and stopping, troubleshooting, servicing, and maintaining equipment and schedules.
2. Provide operator training on data display, alarm and status descriptors, requesting data, executing commands, calibrating and adjusting devices, resetting default values, and requesting logs. Include a minimum of 16 hours' dedicated instructor time on-site.
3. Review data in maintenance manuals. Refer to Division 1.
4. Schedule training with COTR, with at least seven days' advance notice.
5. Partially demonstrate ATC work as systems are completed and accepted by the COTR.

3.7 ON-SITE ASSISTANCE

A. Occupancy Adjustments: Within one year of date of Substantial Completion, provide up to three Project site visits, when requested by COTR, to adjust and calibrate components and to assist COTR's personnel in making program changes and in adjusting sensors and controls to suit actual conditions.

B. Return to site in season to demonstrate (and instruct operating personnel) so that both heating and cooling season operation is demonstrated.

3.8 INPUT/OUTPUT SHEETS

A. See attached I/O Summary Table.

END OF SECTION 23 0900

SECTION 23 3113 - METAL DUCTS

PART 1 - GENERAL

1.1 RELATED DOCUMENTS

A. Drawings and general provisions of the Contract, including General and Supplementary Conditions and Division 01 Specification Sections, apply to this Section.

1.2 SUMMARY

A. Section Includes:

1. Single-wall rectangular ducts and fittings.
2. Sheet metal materials.
3. Sealants and gaskets.
4. Hangers and supports.

B. Related Sections:

1. Section 23 0593 "Testing, Adjusting, and Balancing for HVAC" for testing, adjusting, and balancing requirements for metal ducts.
2. Section 23 3300 "Air Duct Accessories" for dampers, sound-control devices, duct-mounting access doors and panels, turning vanes, and flexible ducts.

1.3 ACTION SUBMITTALS

A. Shop Drawings: Minimum scale 3/8” = 1’-0”.

1. Fabrication, assembly, and installation, including plans, elevations, sections, components, and attachments to other work.
2. Factory- and shop-fabricated ducts and fittings.
3. Duct layout indicating sizes, configuration, liner material, and static-pressure classes.
4. Elevation of top of ducts.
5. Dimensions of main duct runs from building grid lines.
6. Fittings.
7. Reinforcement and spacing.
8. Seam and joint construction.
9. Penetrations through fire-rated and other partitions.
10. Equipment installation based on equipment being used on Project.
11. Locations for duct accessories, including dampers, turning vanes, and access doors and panels.
12. Hangers and supports, including methods for duct and building attachment and vibration isolation.

B. Field quality-control reports.

1.4 QUALITY ASSURANCE

A. Welding Qualifications: Qualify procedures and personnel according to the following:

1. AWS D1.1/D1.1M, "Structural Welding Code - Steel," for hangers and supports.
2. AWS D9.1M/D9.1, "Sheet Metal Welding Code," for duct joint and seam welding.

PART 2 - PRODUCTS

2.1 SINGLE-WALL RECTANGULAR DUCTS AND FITTINGS

A. Fabricate ducts, elbows, transitions, offsets, branch connections, and other construction according to SMACNA's "HVAC Duct Construction Standards--Metal and Flexible" and complying with requirements for metal thickness, reinforcing types and intervals, tie-rod applications, and joint types and intervals. Fabricate ductwork to be free from vibration, rattle or drumming under all operating conditions.

1. Lengths: Fabricate rectangular ducts in lengths appropriate to reinforcement and rigidity class required for pressure class.
2. Deflection: Duct systems shall not exceed deflection limits according to SMACNA's "HVAC Duct Construction Standards--Metal and Flexible."
3. Transverse Joints: Utilize prefabricated slide-on joints or formed-on flanges.
   a. Slip-and-Drive Joints may be utilized for transfer ducts, at Contractor’s option.

B. Prefabricated Slide-on Joints: Constructed using manufacturer's guidelines for material thickness, reinforcement size and spacing, joining methods, and joint reinforcement.

1. Manufacturers:
   a. Ductmate Industries, Inc.
   b. Nexus, Inc.
   c. Quickduc, Inc.
   d. Ward Industries, Inc.

C. Formed-On Flanges: Construct according to SMACNA's "HVAC Duct Construction Standards-Metal and Flexible," Figure 2-1, joints T-25a or T-25b (TDC or TDF) using corner, bolt, cleat, and gasket details.

1. Manufacturers:
   a. Ductmate Industries, Inc.
   b. Lockformer.
2. Longitudinal Seams: Pittsburgh lock sealed with noncuring polymer sealant.

D. Requirements for Prefabricated Slide-on Joints and Formed-on Flanges:

1. Minimum sheetmetal gauges shall conform to both Rectangular Duct Reinforcement Tables2-1 through 2-28 and Transverse Joint Reinforcement Table 2-32.
2. Cleats or clips as manufactured for the specific purpose of joining adjacent flanges shall be utilized in conjunction with transverse joints; sheetmetal screws alone are not acceptable for joining flanges.

E. Restrictions for Use of Tie Rods:

1. Tie rods or other type of intermediate duct reinforcement shall not be used in ducts with longest side less than 37 inches.
2. Where tie rod connections penetrate ductwork, neoprene backed galvanized washers shall be used to seal penetrations air-tight.
3. Where tie rods are in sound lined ductwork, seal edges of sound lining penetrations with sound lining adhesive.
4. Tie rods at each joint and between joint and mid span shall align to minimize air turbulence.

F. Rectangular Duct Fittings:

1. Fabricate elbows, transitions, offsets, branch connections, etc., in accordance with SMACNA manual Figures 2-1 through 2-10 and the following:
   a. Rectangular elbows shall be Figure 2-2 Type RE-2 with turning vanes. Turning vanes are specified in Division 23 Section “Air Duct Accessories..
   b. Radius elbows shall be Figure 2-2 Type RE-1 only.
   c. Branch connections shall be 45 degree entry type only.
   d. Transitions and offsets shall follow Figure 4-7 and where space permits shall slope a maximum of 15 degrees, unless otherwise indicated on drawings.

G. Cross Breaking or Cross Beading: Cross break or cross bead duct sides 19 inches and larger and 0.0359 inch thick or less, with more than 10 sq. ft. of nonbraced panel area unless ducts are lined.

2.2 SHEET METAL MATERIALS

A. General Material Requirements: Comply with SMACNA's "HVAC Duct Construction Standards - Metal and Flexible" for acceptable materials, material thicknesses, and duct construction methods unless otherwise indicated. Sheet metal materials shall be free of pitting, seam marks, roller marks, stains, discolorations, and other imperfections.

B. Galvanized Sheet Steel: Comply with ASTM A 653/A 653M.

1. Galvanized Coating Designation: G60 (Z180).
2. Finishes for Surfaces Exposed to View: Mill phosphatized.

C. Reinforcement Shapes and Plates: ASTM A 36/A 36M, steel plates, shapes, and bars; black and galvanized.

1. Where black- and galvanized-steel shapes and plates are used to reinforce aluminum ducts, isolate the different metals with butyl rubber, neoprene, or EPDM gasket materials.

D. Tie Rods: Galvanized steel, 1/4-inch (6-mm) minimum diameter for lengths 36 inches (900 mm) or less; 3/8-inch (10-mm) minimum diameter for lengths longer than 36 inches (900 mm).

2.3 SEALANT AND GASKETS

A. General Sealant and Gasket Requirements: Surface-burning characteristics for sealants and gaskets shall be a maximum flame-spread index of 25 and a maximum smoke-developed index of 50 when tested according to UL 723; certified by an NRTL.

B. Two-Part Tape Sealing System:

1. Tape: Woven cotton fiber impregnated with mineral gypsum and modified acrylic/silicone activator to react exothermically with tape to form hard, durable, airtight seal.
2. Tape Width: 3 inches (76 mm).
3. Sealant: Modified styrene acrylic.
4. Water resistant.
5. Mold and mildew resistant.
6. Maximum Static-Pressure Class: 10-inch wg (2500 Pa), positive and negative.
7. Service: Indoor and outdoor.
8. Service Temperature: Minus 40 to plus 200 deg F (Minus 40 to plus 93 deg C).
9. Substrate: Compatible with galvanized sheet steel (both PVC coated and bare), stainless steel, or aluminum.
10. For indoor applications, sealant shall have a VOC content of 250 g/L or less when calculated according to 40 CFR 59, Subpart D (EPA Method 24).
11. Sealant shall comply with the testing and product requirements of the California Department of Health Services' "Standard Practice for the Testing of Volatile Organic Emissions from Various Sources Using Small-Scale Environmental Chambers."

C. Water-Based Joint and Seam Sealant:

1. Application Method: Brush on.
2. Solids Content: Minimum 65 percent.
3. Shore A Hardness: Minimum 20.
4. Water resistant.
5. Mold and mildew resistant.
6. VOC: Maximum 75 g/L (less water).
7. Maximum Static-Pressure Class: 10-inch wg (2500 Pa), positive and negative.
8. Service: Indoor or outdoor.
9. Substrate: Compatible with galvanized sheet steel (both PVC coated and bare), stainless steel, or aluminum sheets.

D. Solvent-Based Joint and Seam Sealant:

1. Application Method: Brush on.
2. Base: Synthetic rubber resin.
3. Solvent: Toluene and heptane.
4. Solids Content: Minimum 60 percent.
5. Shore A Hardness: Minimum 60.
6. Water resistant.
7. Mold and mildew resistant.
8. For indoor applications, sealant shall have a VOC content of 250 g/L or less when calculated according to 40 CFR 59, Subpart D (EPA Method 24).

9. Maximum Static-Pressure Class: 10-inch wg (2500 Pa), positive or negative.
10. Service: Indoor or outdoor.
11. Substrate: Compatible with galvanized sheet steel (both PVC coated and bare), stainless steel, or aluminum sheets.

E. Flanged Joint Sealant: Comply with ASTM C 920.

1. General: Single-component, acid-curing, silicone, elastomeric.
2. Type: S.
3. Grade: NS.
4. Class: 25.
5. Use: O.

F. Flange Gaskets: Butyl rubber, neoprene, or EPDM polymer with polyisobutylene plasticizer.

2.4 HANGERS AND SUPPORTS

A. Hanger Rods for Noncorrosive Environments: Cadmium-plated steel rods and nuts.

B. Strap and Rod Sizes: Comply with SMACNA's "HVAC Duct Construction Standards - Metal and Flexible," Table 5-1 (Table 5-1M), "Rectangular Duct Hangers Minimum Size," and Table 5-2, "Minimum Hanger Sizes for Round Duct."

C. Duct Attachments: Sheet metal screws, blind rivets, or self-tapping metal screws; compatible with duct materials.

D. Trapeze and Riser Supports:

1. Supports for Galvanized-Steel Ducts: Galvanized-steel shapes and plates.
2. Supports for Stainless-Steel Ducts: Stainless-steel shapes and plates.
3. Supports for Aluminum Ducts: Aluminum or galvanized steel coated with zinc chromate.

PART 3 - EXECUTION

3.1 DUCT INSTALLATION

A. Drawing plans, schematics, and diagrams indicate general location and arrangement of duct system. Indicated duct locations, configurations, and arrangements were used to size ducts and calculate friction loss for fan sizing and for other design considerations. Install duct systems as indicated unless deviations to layout are approved on Shop Drawings and Coordination Drawings.

B. Install ducts according to SMACNA's "HVAC Duct Construction Standards - Metal and Flexible" unless otherwise indicated.

C. Install round ducts in maximum practical lengths.

D. Install ducts with fewest possible joints.

E. Install factory- or shop-fabricated fittings for changes in direction, size, and shape and for branch connections.

F. Unless otherwise indicated, install ducts vertically and horizontally, and parallel and perpendicular to building lines.

G. Install ducts close to walls, overhead construction, columns, and other structural and permanent enclosure elements of building.

H. Install ducts with a clearance of 1 inch (25 mm), plus allowance for insulation thickness.

I. Route ducts to avoid passing through transformer vaults and electrical equipment rooms and enclosures.

J. Where ducts pass through non-fire-rated interior partitions and exterior walls and are exposed to view, cover the opening between the partition and duct or duct insulation with sheet metal flanges of same metal thickness as the duct. Overlap openings on four sides by at least 1-1/2 inches (38 mm).

K. Where ducts pass through fire-rated interior partitions and exterior walls, install fire dampers. Comply with requirements in Section 23 3300 "Air Duct Accessories" for fire and smoke dampers.

L. Protect duct interiors from moisture, construction debris and dust, and other foreign materials. Comply with SMACNA's "IAQ Guidelines for Occupied Buildings Under Construction," Appendix G, "Duct Cleanliness for New Construction Guidelines."

3.2 INSTALLATION OF EXPOSED DUCTWORK

A. Protect ducts exposed in finished spaces from being dented, scratched, or damaged.

B. Trim duct sealants flush with metal. Create a smooth and uniform exposed bead. Do not use two-part tape sealing system.

C. Grind welds to provide smooth surface free of burrs, sharp edges, and weld splatter. When welding stainless steel with a No. 3 or 4 finish, grind the welds flush, polish the exposed welds, and treat the welds to remove discoloration caused by welding.

D. Maintain consistency, symmetry, and uniformity in the arrangement and fabrication of fittings, hangers and supports, duct accessories, and air outlets.

E. Repair or replace damaged sections and finished work that does not comply with these requirements.

3.3 DUCT SEALING

A. Seal ducts for duct static-pressure, seal classes, and leakage classes specified in "Duct Schedule" Article according to SMACNA's "HVAC Duct Construction Standards - Metal and Flexible."

3.4 HANGER AND SUPPORT INSTALLATION

A. Comply with SMACNA's "HVAC Duct Construction Standards - Metal and Flexible," Chapter 5, "Hangers and Supports."

B. Building Attachments: Concrete inserts, powder-actuated fasteners, or structural-steel fasteners appropriate for construction materials to which hangers are being attached.

1. Where practical, install concrete inserts before placing concrete.
2. Install powder-actuated concrete fasteners after concrete is placed and completely cured.
3. Use powder-actuated concrete fasteners for standard-weight aggregate concretes or for slabs more than 4 inches (100 mm) thick.
4. Do not use powder-actuated concrete fasteners for lightweight-aggregate concretes or for slabs less than 4 inches (100 mm) thick.

C. Hanger Spacing: Comply with SMACNA's "HVAC Duct Construction Standards - Metal and Flexible," Table 5-1 (Table 5-1M), "Rectangular Duct Hangers Minimum Size," and Table 5-2, "Minimum Hanger Sizes for Round Duct," for maximum hanger spacing; install hangers and supports within 24 inches (610 mm) of each elbow and within 48 inches (1200 mm) of each branch intersection.

D. Hangers Exposed to View: Threaded rod and angle or channel supports.

E. Support vertical ducts with steel angles or channel secured to the sides of the duct with welds, bolts, sheet metal screws, or blind rivets; support at each floor and at a maximum intervals of 16 feet (5 m).

F. Install upper attachments to structures. Select and size upper attachments with pull-out, tension, and shear capacities appropriate for supported loads and building materials where used.

3.5 CONNECTIONS

A. Make connections to equipment with flexible connectors complying with Section 23 3300 "Air Duct Accessories."

B. Comply with SMACNA's "HVAC Duct Construction Standards - Metal and Flexible" for branch, outlet and inlet, and terminal unit connections.

3.6 PAINTING

A. Paint interior of metal ducts that are visible through registers and grilles and that do not have duct liner. Apply one coat of flat, black, latex paint over a compatible galvanized-steel primer. Paint materials and application requirements are specified in Section 09 9000 "Painting".

3.7 FIELD QUALITY CONTROL

A. Perform tests and inspections.

B. Perform the following field tests and inspections according to SMACNA's "HVAC Air Duct Leakage Test Manual" and prepare test reports:

1. Test ductwork rated above 2-inch wg positive and below 2-inch wg negative construction.
2. Test 10 duct sections for ductwork rated between 2-inch positive and 2-inch negative. Duct sections to be tested shall be selected by the Architect. If selected duct sections do not pass testing criteria, all ductwork shall be tested.
3. Disassemble, reassemble, and seal segments of systems to accommodate leakage testing and for compliance with test requirements.
4. Conduct tests at static pressures equal to maximum design pressure of system or section being tested. If pressure classes are not indicated, test entire system at maximum system design pressure. Do not pressurize systems above maximum design operating pressure. Give seven days' advance notice for testing.
5. Maximum Allowable Leakage: Comply with requirements for Leakage Class 3 for round ducts, Leakage Class 12 for rectangular ducts in pressure classes lower than and equal to 2-inch wg (both positive and negative pressures), Leakage Class 6 for rectangular ducts in pressure class 3-inch w.g. (both positive and negative pressures), and Leakage Class 3 for rectangular ducts in pressure classes from 4- to 10-inch wg (both positive and negative pressures).
6. Remake leaking joints and retest until leakage is equal to or less than maximum allowable.
7. Keep ducts free of audible leaks which are detectable in finished spaces.
8. Notify Owner’s representative and testing and balancing contractor (Division 23 Section Testing, Adjusting, and Balancing for HVAC), who shall witness tests, at least 48 hours in advance.
9. Record leakage testing results on reproduced forms from the SMACNA HVAC Air Duct Leakage Test Manual. Submit results of tests to Architect within one week after completion.
10. Perform testing prior to installing insulation systems.

C. Duct System Cleanliness Tests:

1. Visually inspect duct system to ensure that no visible contaminants are present.
2. Test sections of metal duct system, chosen randomly by COTR, for cleanliness according to "Vacuum Test" in NADCA ACR, "Assessment, Cleaning and Restoration of HVAC Systems."

    a. Acceptable Cleanliness Level: Net weight of debris collected on the filter media shall not exceed 0.75 mg/100 sq. cm.

D. Duct system will be considered defective if it does not pass tests and inspections.

E. Prepare test and inspection reports.

3.8 START UP

A. Air Balance: Comply with requirements in Section 23 0593 "Testing, Adjusting, and Balancing for HVAC."

3.9 DUCT SCHEDULE

A. Fabricate ducts with galvanized sheet steel:

B. Supply Ducts:

1. Ducts Connected to Constant-Volume Air-Handling Units:

a. Pressure Class: Positive 2-inch wg (500 Pa).
b. Minimum SMACNA Seal Class: A.

C. Exhaust Ducts:

1. Ducts Connected to Fans Exhausting Air (ASHRAE 62.1, Class 1 and 2):

a. Suction side of fan:
1) Pressure Class: Negative 4-inch wg (1000 Pa).
2) Minimum SMACNA Seal Class: A.

b. Discharge side of fan:
1) Pressure Class: Positive 2-inch wg (500 Pa).
2) Minimum SMACNA Seal Class: A.

D. Outdoor-Air (Not Filtered, Heated, or Cooled) Ducts:

1. Ducts Connected to Equipment Not Listed Above:

a. Pressure Class: Positive or negative 2-inch wg (500 Pa).
b. Minimum SMACNA Seal Class: B.

E. Intermediate Reinforcement:

1. Galvanized-Steel Ducts: Galvanized steel.

END OF SECTION 23 3113

SECTION 23 3300 - AIR DUCT ACCESSORIES

PART 1 - GENERAL

1.1 RELATED DOCUMENTS

A. Drawings and general provisions of the Contract, including General and Supplementary Conditions and Division 01 Specification Sections, apply to this Section.

1.2 SUMMARY

A. Section Includes:

1. Manual volume dampers.
2. Turning vanes.
3. Combination fire and smoke dampers.
4. Duct-mounted access doors.
5. Flexible connectors.
6. Flexible ducts.
7. Duct accessory hardware.
8. Smoke control dampers.

B. Related Requirements:

1. Section 230900 “Instrumentation and Control for HVAC” for smoke damper control.

2. Section 28 3111 "Digital, Addressable Fire-Alarm System" for duct-mounted smoke detectors.

1.3 ACTION SUBMITTALS

A. Shop Drawings: For duct accessories. Include plans, elevations, sections, details and attachments to other work.

1. Detail duct accessories fabrication and installation in ducts and other construction. Include dimensions, weights, loads, and required clearances; and method of field assembly into duct systems and other construction. Include the following:

a. Special fittings.
b. Manual volume damper installations.
c. Combination fire and smoke damper installations.
d. Control-damper installations.
e. Wiring Diagrams: For power, signal, and control wiring.

1.4 CLOSEOUT SUBMITTALS

A. Operation and Maintenance Data: For air duct accessories to include in operation and maintenance manuals.

PART 2 - PRODUCTS

2.1 ASSEMBLY DESCRIPTION

A. Comply with SMACNA's "HVAC Duct Construction Standards - Metal and Flexible" for acceptable materials, material thicknesses, and duct construction methods unless otherwise indicated. Sheet metal materials shall be free of pitting, seam marks, roller marks, stains, discolorations, and other imperfections.

2.2 MATERIALS

A. Galvanized Sheet Steel: Comply with ASTM A 653/A 653M.

1. Galvanized Coating Designation: G90 (Z275).
2. Exposed-Surface Finish: Mill phosphatized.

B. Stainless-Steel Sheets: Comply with ASTM A 480/A 480M.

C. Reinforcement Shapes and Plates: Galvanized-steel reinforcement where installed on galvanized sheet metal ducts; compatible materials for aluminum and stainless-steel ducts.

D. Tie Rods: Galvanized steel, 1/4-inch (6-mm) minimum diameter for lengths 36 inches (900 mm) or less; 3/8-inch (10-mm) minimum diameter for lengths longer than 36 inches (900 mm).

2.3 MANUAL VOLUME DAMPERS

A. Standard, Steel, Manual Volume Dampers:

1. Manufacturers: Subject to compliance with requirements, provide products by one of the following:

a. McGill AirFlow LLC.
b. Nailor Industries Inc.
c. Pottorff.
d. Ruskin Company.

2. Standard leakage rating.
3. Suitable for horizontal or vertical applications.
4. Frames:

a. Frame: Hat-shaped, 0.094-inch- (2.4-mm-) thick, galvanized sheet steel.
b. Mitered and welded corners.
c. Flanges for attaching to walls and flangeless frames for installing in ducts.

5. Blades:

a. Multiple or single blade.
b. Parallel- or opposed-blade design.
c. Stiffen damper blades for stability.
d. Galvanized-steel, 0.064 inch (1.62 mm) thick.

6. Blade Axles: Galvanized steel.
7. Bearings:

    a. Oil-impregnated bronze.
    b. Dampers in ducts with pressure classes of 3-inch wg (750 Pa) or less shall have axles full length of damper blades and bearings at both ends of operating shaft.

8. Tie Bars and Brackets: Galvanized steel.

2.4 COMBINATION FIRE AND SMOKE DAMPERS

A. Manufacturers: Subject to compliance with requirements, provide products by one of the following:

    1. Air Balance Inc.; a division of Mestek, Inc.
    2. Cesco Products; a division of Mestek, Inc.
    3. Greenheck Fan Corporation.
    4. Nailor Industries Inc.
    5. Ruskin Company.

B. Type: Dynamic; rated and labeled according to UL 555 and UL 555S by an NRTL.

C. Closing rating in ducts up to 4-inch wg static pressure class and minimum 4000-fpm velocity.

D. Fire Rating: 1-1/2 hours.

E. Frame: Curtain type with blades outside airstream; fabricated with roll-formed, 0.034-inch thick galvanized steel; with mitered and interlocking corners.

F. Heat-Responsive Device: Electric resettable link and switch package, factory installed, rated.

G. Smoke Detector: Externally mounted. Refer to Division 28 Section “Addressable Fire Alarm Systems.”

H. Blades: Roll-formed, horizontal, interlocking, 0.034-inch thick, galvanized sheet steel. In place of interlocking blades, use full-length, 0.034-inch thick, galvanized-steel blade connectors.

I. Leakage: Class II.

J. Rated pressure and velocity to exceed design airflow conditions.

K. Mounting Sleeve: Factory-installed, 0.052-inch thick, galvanized sheet steel; length to suit wall application.

L. Master control panel for use in dynamic smoke-management systems.

M. Damper Motors: Two-position action, externally mounted.

N. Comply with NEMA designation, temperature rating, service factor, enclosure type, and efficiency requirements for motors specified in Division 23 Section "Common Motor Requirements for HVAC Equipment."

1. Motor Sizes: Minimum size as indicated. If not indicated, large enough so driven load will not require motor to operate in service factor range above 1.0.
2. Controllers, Electrical Devices, and Wiring: Comply with requirements for electrical devices and connections specified in Division 23 Section "HVAC Instrumentation and Controls."
3. Permanent-Split-Capacitor or Shaded-Pole Motors: With oil-immersed and sealed gear trains.
4. Spring-Return Motors: Equip with an integral spiral-spring mechanism where indicated. Enclose entire spring mechanism in a removable housing designed for service or adjustments. Size for running torque rating of 150 in. x lbf and breakaway torque rating of 150 in. x lbf.
5. Outdoor Motors and Motors in Outdoor-Air Intakes: Equip with O-ring gaskets designed to make motors weatherproof. Equip motors with internal heaters to permit normal operation at minus 40 deg F.
6. Nonspring-Return Motors: For dampers larger than 25 sq. ft., size motor for running torque rating of 150 in. x lbf and breakaway torque rating of 300 in. x lbf.
7. Electrical Connection: 115 V, single phase, 60 Hz.

O. Accessories:

1. Auxiliary switch for position indication, where indicated on floor plans.

2.5 SMOKE CONTROL DAMPERS

A. Manufacturers: Subject to compliance with requirements, provide products by one of the following:

1. Aire Technologies.
2. American Warming and Ventilating; a Mestek Architectural Group company.
3. Greenheck Fan Corporation.
4. Nailor Industries Inc.
5. Ruskin Company.

B. Type: Dynamic; rated and labeled according to UL 555 and UL 555S by an NRTL.

C. Frame: fabricated with roll-formed, 0.094-inch-(2.4 mm-) thick galvanized sheet steel; with mitered and interlocking corners.

D. Blades: Roll-formed, horizontal, interlocking, 0.034-inch-(0.86 mm-) thick, galvanized sheet steel. In place of interlocking blades, use full-length, 0.034-inch-(0.86 mm-) thick, galvanized-steel blade connectors.

E. Leakage: Class II.

F. Rated pressure and velocity to exceed design airflow conditions.

G. Mounting Sleeve: Factory-installed, 0.052-inch-(1.3 mm-) thick, galvanized sheet steel; length to suit wall or floor application with factory-furnished silicone calking.

H. Damper Motors: two-position action.

I. Comply with NEMA designation, temperature rating, service factor, enclosure type, and efficiency requirements for motors specified in Division 23 Section "Common Motor Requirements for HVAC Equipment."
   1. Motor Sizes: Minimum size as indicated. If not indicated, large enough so driven load will not require motor to operate in service factor range above 1.0.
   2. Controllers, Electrical Devices, and Wiring: Comply with requirements for electrical devices and connections specified in Division 23 Section "HVAC Instrumentation and Controls."
   3. Permanent-Split-Capacitor or Shaded-Pole Motors: With oil-immersed and sealed gear trains.
   4. Spring-Return Motors: Equip with an integral spiral-spring mechanism. Enclose entire spring mechanism in a removable housing designed for service or adjustments. Size for running torque rating of 150 in x lbf (1.73 mKg) and breakaway torque rating of 150 in x lbf (1.73 mKg).
   5. Electrical Connection: 115 V, single phase, 60 Hz.

J. Accessories:
   1. Auxiliary switches for position indication.

2.6 TURNING VANES

A. Manufacturers: Subject to compliance with requirements, provide products by one of the following:

B. Basis-of-Design Product: Subject to compliance with requirements, provide or comparable product by one of the following:

   1. Ductmate Industries, Inc.
   2. Duro Dyne Inc.
   3. Ward Industries, Inc.; a division of Hart & Cooley, Inc.

C. Manufactured Turning Vanes for Metal Ducts: Curved blades of galvanized sheet steel; support with bars perpendicular to blades set; set into vane runners suitable for duct mounting.

   1. Acoustic Turning Vanes: Fabricate airfoil-shaped aluminum extrusions with perforated faces and fibrous-glass fill.

D. General Requirements: Comply with SMACNA's "HVAC Duct Construction Standards - Metal and Flexible"; Figures 4-3, "Vanes and Vane Runners," and 4-4, "Vane Support in Elbows."

E. Vane Construction: Single wall for ducts up to 48 inches (1200 mm) wide and double wall for larger dimensions.

2.7 DUCT-MOUNTED ACCESS DOORS

A. General Description: Fabricate doors airtight and suitable for duct pressure class.

B. Standard bolted access door: Oval outer door connected to an inner plate by spring loaded carriage bolts, with hand knobs for tightening, inert cellular sponge gasket, and permanently bonded polyester insulation (to prevent moisture from forming on outer surface).

1. Manufacturers:

a. American Warming and Ventilating
b. Ductmate Industries, Inc.
c. Flexmaster U.S.A., Inc.
d. Greenheck.
e. McGill Airflow Corporation.
f. Nailor Industries, Inc.
g. Ventfabrics, Inc.
h. Ward Industries, Inc.

2. Doors shall be leak free at 20” w.g. static pressure.
3. Doors shall be equal to McGill Airflow Corporation Model AOBXFSDF for rectangular ducts and Model AOBXFSDC for round ducts.

C. Round Access Doors: Double wall, duct mounting, and round; fabricated of galvanized sheet metal with insulation fill and 1-inch thickness. Include cam latches.

1. Manufacturers:

a. Ductmate Industries, Inc.
b. Flexmaster U.S.A., Inc.

2. Frame: Galvanized sheet steel, with spin-in notched frame.

D. For round ducts too small to locate other specified access doors, provide hinged access doors.

1. Manufacturers:

a. Semco.
b. Approved equal.

2. Door shall be 20 gauge galvanized steel.
3. Hinge shall be continuous type.
4. Latches shall be sash lock type and a minimum of 3 (one on each side, except hinge side) shall be provided.
5. Gasket provided shall be continuous.
6. Doors shall be suitable for the pressure class of the duct systems in which they are located.
7. Externally insulate access doors in insulated duct systems. Insulation shall be equal to type and thickness specified for the duct system in Division 23, Section “Mechanical Insulation.”

8. Hinged access doors shall be equal to Semco type S40.

2.8 ROUND TAKEOFF FITTINGS

A. Manufacturers:

1. Flexmaster U.S.A., Inc.
2. Approved equal.

B. Provide integral locking hand quadrant type volume damper where indicated or where round takeoff fittings are located at round duct branches serving air devices. Volume damper shall be complete with standoff for 2” insulation, square shaft, U-bolt, nylon bushings, locking quadrant, and damper blade.

C. Seal fittings as follows:

1. Spot or tack welded and sealed with a specified sealant for pressure classes from minus 2-inch wg to plus 2-inch wg, unless otherwise indicated.
2. Continuously welded for pressure classes from plus 2-inch wg to 10-inch wg, unless otherwise indicated.

D. Conical fittings:

1. Spin-in type.
2. Constructed of a two-piece 26-gauge G-90 galvanized steel body and factory sealed for high pressure applications.
3. Overall length of the fitting shall be 6” without damper and 10” with damper.
4. Round outlet shall be provided with a rolled stiffener bead for strength and ease of installation and sealing of spiral and flexible ductwork joints.
5. Conical fittings shall be equal to Flexmaster Model CB.

E. Flared fittings:

1. Spin-in type.
2. Constructed of 26 gauge G-90 galvanized steel.
3. Overall length of the fitting shall be 3” without damper and 7” with damper.
4. Round outlet shall be provided with a rolled stiffener bead for strength and ease of installation and sealing of spiral and flexible ductwork joints.
5. Flared fittings shall be equal to Flexmaster Model FL.

F. Side takeoff fittings:

1. Maintain a ratio of 1:1 of inlet to outlet on units over 7” diameter to allow proper sizing of the duct system.
2. Incorporate a 45-degree rectangular entry to minimize pressure drop.
3. Include a 1” wide pre-punched mounting flange with corner clips and adhesive gasket for minimal leakage and ease of installation.
4. Constructed of a two-piece 26-gauge G-90 galvanized steel body and collar.
5. Overall length of the fitting shall be 13” with or without damper to reduce turbulence in the airstream.

6. Round outlet shall be provided with a rolled stiffener bead for strength and ease of installation and sealing of spiral and flexible ductwork joints.
7. Side takeoff fittings shall be equal to Flexmaster Model STO.

2.9 FLEXIBLE CONNECTORS

A. Manufacturers:

1. Ductmate Industries, Inc.
2. Duro Dyne Corp.
3. Ventfabrics, Inc.
4. Ward Industries, Inc.

B. General Description: Flame-retardant or noncombustible fabrics, coatings, and adhesives complying with UL 181, Class 1.

C. Extra-Wide Metal-Edged Connectors: Factory fabricated with a fabric strip 5-3/4 inches wide attached to two strips of 2-3/4-inch- wide, 0.028-inch- thick, galvanized sheet steel or 0.032-inch- thick aluminum sheets. Select metal compatible with ducts. Fold and crimp metal edge strips onto fabric as illustrated in SMACNA HVAC Duct Standard.

D. Indoor System, Flexible Connector Fabric: Glass fabric double coated with neoprene.

1. Minimum Weight: 26 oz./sq. yd..
2. Tensile Strength: 480 lbf/inch in the warp and 360 lbf/inch in the filling.
3. Service Temperature: Minus 20 to plus 200 deg F.

2.12 DUCT ACCESSORY HARDWARE

A. Instrument Test Holes: Cast iron or cast aluminum to suit duct material, including screw cap and gasket. Size to allow insertion of pitot tube and other testing instruments and of length to suit duct insulation and sound lining thickness.

B. Adhesives: High strength, quick setting, neoprene based, waterproof, and resistant to gasoline and grease.

PART 3 - EXECUTION

3.1 INSTALLATION

A. Install duct accessories according to applicable details in SMACNA's "HVAC Duct Construction Standards - Metal and Flexible" for metal ducts.

B. Install duct accessories of materials suited to duct materials; use galvanized-steel accessories in galvanized-steel and stainless-steel accessories in stainless-steel ducts.

C. Install volume dampers at points on supply, return, and exhaust systems where branches extend from larger ducts. Where dampers are installed in ducts having duct liner, install dampers with hat channels of same depth as liner, and terminate liner with nosing at hat channel.

1. Install steel volume dampers in steel ducts.

D. Set dampers to fully open position before testing, adjusting, and balancing.

E. Install test holes at fan inlets and outlets and elsewhere as indicated.

F. Install duct access doors on sides of ducts to allow for inspecting, adjusting, and maintaining accessories and equipment at the following locations:

1. Downstream from manual volume dampers, control dampers, backdraft dampers, and equipment.
2. Adjacent to and close enough to fire or smoke dampers, to reset or reinstall fusible links. Access doors for access to fire or smoke dampers having fusible links shall be pressure relief access doors and shall be outward operation for access doors installed upstream from dampers and inward operation for access doors installed downstream from dampers.
3. Control devices requiring inspection.
4. Elsewhere as indicated.

G. Install access doors with swing against duct static pressure.

H. Access Door Sizes:

1. One-Hand or Inspection Access: 8 by 5 inches (200 by 125 mm).
2. Two-Hand Access: 12 by 6 inches (300 by 150 mm).
3. Head and Hand Access: 18 by 10 inches (460 by 250 mm).
4. Head and Shoulders Access: 21 by 14 inches (530 by 355 mm).
5. Body Access: 25 by 14 inches (635 by 355 mm).
6. Body plus Ladder Access: 25 by 17 inches (635 by 430 mm).

I. Install flexible connectors to connect ducts to equipment.

J. For fans developing static pressures of 5-inch wg (1250 Pa) and more, cover flexible connectors with loaded vinyl sheet held in place with metal straps.

K. Install duct test holes where required for testing and balancing purposes.

L. Install thrust limits at centerline of thrust, symmetrical on both sides of equipment. Attach thrust limits at centerline of thrust and adjust to a maximum of 1/4-inch (6-mm) movement during start and stop of fans.

M. Install smoke and combination fire and smoke dampers with fusible links and electric sensors, according to manufacturer's UL-approved written instructions.

N. Adjust combination fire and smoke dampers for proper action.

3.2 FIELD QUALITY CONTROL

A. Tests and Inspections:

1. Operate dampers to verify full range of movement.

2. Inspect locations of access doors and verify that purpose of access door can be performed.
3. Inspect turning vanes for proper and secure installation.

END OF SECTION 23 3300

SECTION 23 3423 - HVAC POWER VENTILATORS

PART 1 - GENERAL

1.1 RELATED DOCUMENTS

A. Drawings and general provisions of the Contract, including General and Supplementary Conditions and Division 01 Specification Sections, apply to this Section.

1.2 SUMMARY

A. This Section includes the following:

1. Smoke & Heat Mixed Flow Fans.
2. Propeller Fans.
3. Smoke & Heat Upblast Fans.

1.3 PERFORMANCE REQUIREMENTS

A. Project Altitude: Base air ratings on sea-level conditions.

B. Operating Limits: Classify according to AMCA 99.

1.4 SUBMITTALS

A. Product Data: Include rated capacities, furnished specialties, and accessories for each type of product indicated and include the following:

1. Certified fan performance curves with system operating conditions indicated.
2. Certified fan sound-power ratings.
3. Motor ratings and electrical characteristics, plus motor and electrical accessories.
4. Material gages and finishes, including color charts.
5. Dampers, including housings, linkages, and operators.
6. Filter dimensions; operating characteristics; required clearances and access; rated flow capacity, including initial and final pressure drop at rated airflow; efficiency and test method; fire classification; furnished specialties; and accessories for each model indicated.

B. Shop Drawings: Detail equipment assemblies and indicate dimensions, weights, loads, required clearances, method of field assembly, components, and location and size of each field connection.

1. Wiring Diagrams: Power, signal, and control wiring. Differentiate between manufacturer-installed and field-installed wiring.
2. Vibration Isolation Base Details: Detail fabrication, including anchorages and attachments to structure and to supported equipment. Include auxiliary motor slides and rails, and base weights.

C. Maintenance Data: For power ventilators to include in maintenance manuals specified in Division 01.

1.5 QUALITY ASSURANCE

A. Electrical Components, Devices, and Accessories: Listed and labeled as defined in NFPA 70, Article 100, by a testing agency acceptable to authorities having jurisdiction, and marked for intended use.

B. AMCA Compliance: Products shall comply with performance requirements and shall be licensed to use the AMCA-Certified Ratings Seal.

C. NEMA Compliance: Motors and electrical accessories shall comply with NEMA standards.

D. UL Standard: Power ventilators shall comply with UL 705.

1.6 DELIVERY, STORAGE, AND HANDLING

A. Deliver fans as factory-assembled unit, to the extent allowable by shipping limitations, with protective crating and covering.

B. Disassemble and reassemble units, as required for moving to final location, according to manufacturer's written instructions.

C. Lift and support units with manufacturer's designated lifting or supporting points.

1.7 COORDINATION

A. Coordinate size and location of structural-steel support members.

B. Coordinate installation of roof curbs, equipment supports, and roof penetrations.

1.8 MOTORS:

A. Provide motors which are suitable for use with variable frequency controllers. Variable frequency controllers are specified in Division 26 Section “Variable Frequency Motor Controllers”.

B. Motors shall comply with Division 23 section “Common Motor Requirements for HVAC Equipment”. Provide shaft grounding brush for motor.

1.9 EXTRA MATERIALS

A. Furnish extra materials described below that match products installed and that are packaged with protective covering for storage and identified with labels describing contents.

1. Belts: One set for each belt-driven unit.

PART 2 - PRODUCTS

2.1 MANUFACTURERS

A. Manufacturers: Subject to compliance with requirements, provide products by one of the following:
   1. The Loren Cook Company.
   2. The New York Blower Company.
   3. Twin City Fan.
   4. ACME Engineering and Manufacturing Company.

2.2 SMOKE & HEAT MIXED FLOW FANS (TYPE QSLSH)

A. Fans shall be smoke and heat mixed flow type of the non-overloading design.

B. Performance:

   1. Performance ratings shall conform to AMCA Standard 205 (fan efficiency grade), 211 (air performance) and 311 (sound performance). Fans shall be tested in accordance with ANSI/AMCA Standard 210 (air performance) and 300 (sound performance) in an AMCA accredited laboratory. Fans shall be licensed to bear the AMCA certified ratings seal for both sound and air, and fan efficiency grade (FEG). Sound certification shall apply to both inlet and outlet sound power levels.
   2. Fans shall be designed for maximum efficiency. Fans shall have a sharply rising pressure characteristic extending through the operating range and continuing to rise well beyond the efficiency peak to assure quiet and stable operation under all conditions. Horsepower characteristics shall be truly self-limiting and shall reach a peak in the normal selection area.
   3. Fans shall be U.L. listed and labeled, and shall comply with U.L. “Power Ventilators for Smoke Control Systems”. This will include meeting the IRI requirements of 500°F for a minimum of 4 hours, the SBCCI “Standard Fire Prevention Code” requirements of 1000° for a minimum of 15 minutes. For roof-mounted fans, this will include meeting the Snow Load Test for butterfly dampers in UL-793. Features shall include 165 degree fusible link damper lifters, vented belt and bearing tube, insulated bearing plate and cover, dual drives, and high temperature bearings. Fans shall bear a permanently attached nameplate displaying model and serial number of the unit for future identification.

C. Housing: Housings shall be cylindrical and welded steel throughout. Inlets shall be fully streamlined. Housings shall be suitably braced to prevent vibration or pulsation. Totally enclosed belt guard shall enclose motor sheave and V-belt drives. Punched inlet and outlet flanges shall be equipped for duct mounting. Extended lube lines shall be provided for ease of lubrication. Fan shall include a belt tube for the protection of belts and drive components from the airstream and bolted access door.

D. Wheel: Fan wheels shall have die-formed hollow airfoil blades designed for maximum efficiency, and quiet and stable operation. Blades shall be continuously welded to the back plate and wheel cone. Wheels shall be statically and dynamically balanced and the complete fan assembly including motor and drive shall be test balanced at or near the operating speed at the factory prior to shipment. Fan wheels shall have cooling fins to draw cool air over shaft and bearings.

E. Shaft: Shafts shall be AISI 1040 or 1045 hot rolled steel, accurately turned, ground, polished, and ring gauged for accuracy. Shafts shall be sized for the first critical speed of at least 1.43 times the maximum speed.

F. Bearings: Bearings shall be heavy duty, grease lubricated, anti-friction ball or roller, self-aligning, pillow block type and selected for a minimum L-10 life of 40,000 hours at the maximum fan RPM. Bearings shall be equipped with extended lubrication lines with grease fittings outside of the fan housing.

G. Drive: Motor sheaves shall be cast iron, variable pitch. Fan shall be equipped with a two-groove drive minimum.

H. Finish and Coating: The entire fan assembly, excluding the shaft, shall be thoroughly degreased and deburred before application of a rust-preventative primer. After the fan is completely assembled, a finish coat of paint shall be applied to the entire assembly. The fan shaft shall be coated with a petroleum-based rust protectant. Aluminum components shall be unpainted.

I. Factory Run Test: Fans with motors and drives shall be completely assembled and test run as a unit at the specified operating speed prior to shipment. Each wheel shall be statically and dynamically balanced in accordance with ANSI/AMCA 204-96 "Balance Quality and Vibration Levels for Fans" to Fan Application Category BV-3, Balance Quality Grade G6.3. Balance readings shall be taken by electronic type equipment in the axial, vertical, and horizontal directions on each of the bearings. Records shall be maintained and a written copy shall be available upon request.

J. Orientation/Configuration:
   1. Fan EF-3 shall be duct-mounted indoors, in-line, horizontal orientation. Provide duct-mounting flanges.

2.3 PROPELLER FANS (TYPE PF)

A. Description: Belt-driven propeller fans consisting of fan blades, hub, housing, orifice ring, motor, drive assembly, and accessories.

B. Housing: Galvanized steel sheet with flanged edges and integral orifice ring with paint finish coat applied after assembly.

C. Fan Wheel: Replaceable, cast-aluminum or extruded-aluminum, airfoil blades fastened to cast-aluminum hub; factory set pitch angle of blades.

D. Belt-Driven Drive Assembly: Resiliently mounted to housing, statically and dynamically balanced and selected for continuous operation at maximum rated fan speed and motor horsepower, with final alignment and belt adjustment made after installation.

   1. Service Factor Based on Fan Motor: 1.4.
   2. Fan Shaft: Turned, ground, and polished steel; keyed to wheel hub.
   3. Shaft Bearings: Permanently lubricated, permanently sealed, self-aligning ball bearings.

      a. Ball-Bearing Rating Life: AMCA 9, L_{10} of 100,000 hours.

4. Pulleys: Cast iron with split, tapered bushing; dynamically balanced at factory.
5. Motor Pulleys: Adjustable pitch for use with motors through 5 hp; fixed pitch for use with motors larger than 5 hp. Select pulley so pitch adjustment is at the middle of adjustment range at fan design conditions.
6. Belts: Oil resistant, nonsparking, and nonstatic; matched sets for multiple belt drives.
7. Belt Guards: Fabricate of steel for motors mounted on outside of fan cabinet.

E. Accessories:

1. Motor operated damper with 120-volt actuator. Provide internally mounted transformer to reduce from line to 120 volts. Provide access through removable wire safety screen.
2. Motor-Side Back Guard: Galvanized steel, complying with OSHA specifications, removable for maintenance.
3. Adjustable Time Delay Relay: To allow time for damper to open prior to starting fan.
4. Weather Hood (MAF-3 and 4 only): Galvanized steel; of configuration to prevent rain from entering fan.
5. Wall Box: Galvanized steel to match fan and accessory size. The wall box shall contain the entire fan assembly as indicated on the drawings.
6. Bird Screen: Galvanized steel, wire mesh.

F. Mounting: Flush Interior.

2.4 SMOKE & HEAT CENTRIFUGAL UPBLAST ROOF EXHAUSTER (TYPE BCRUSH)

A. Fans shall be belt driven centrifugal type of the non-overloading design.

B. Performance:

1. Performance ratings shall conform to AMCA Standard 205 (fan efficiency grade), 211 (air performance) and 311 (sound performance). Fans shall be tested in accordance with ANSI/AMCA Standard 210 (air performance) and 300 (sound performance) in an AMCA accredited laboratory. Fans shall be licensed to bear the AMCA certified ratings seal for both sound and air, and fan efficiency grade (FEG). Sound certification shall apply to both inlet and outlet sound power levels.
2. Fans shall be designed for maximum efficiency. Fans shall have a sharply rising pressure characteristic extending through the operating range and continuing to rise well beyond the efficiency peak to assure quiet and stable operation under all conditions. Horsepower characteristics shall be truly self-limiting and shall reach a peak in the normal selection area.
3. Fans shall be U.L. listed and labeled, and shall comply with U.L. “Power Ventilators for Smoke Control Systems”. This will include meeting the IRI requirements of 500°F for a minimum of 4 hours, the SBCCI “Standard Fire Prevention Code” requirements of 1000° for a minimum of 15 minutes. For roof-mounted fans, this will include meeting the Snow Load Test for butterfly dampers in UL-793. Fans shall bear a permanently attached nameplate displaying model and serial number of the unit for future identification.

C. Construction: Fan shall be constructed of aluminum for durability and appearance. Fan spinnings shall have a rolled bead edge for rigidity. Units shall have a deep venturi inlet to prevent snow and rain entry into the building. The curb cap shall include prepunched mounting holes for ease of installation. A conduit chase constructed of electrical metallic tubing shall be

provided to the motor compartment. The curb base shall provide protection from weather. Lifting lugs shall be provided inside the motor compartment for ease of handling and installation. Fans shall bear a permanently attached nameplate displaying model and serial number of the unit for future identification. Model BCRUSH shall have aluminum nameplate. Ceramic insulation shall line the bottom of the motor compartment to protect motor and drive components from heat.

D. Wheel: Fan wheels shall be of the centrifugal backward inclined type, containing a matching inlet venture for optimum unit performance. Fan wheels on model BCRUSH shall be constructed of steel. Wheels shall be statically and dynamically balanced.

E. Shaft: Fan shafts shall be precision-ground and polished. Shafts shall have a first critical speed of at least 125% of the fan's maximum operating speed.

F. Bearings: Bearings shall be of the one-piece, pillow block type with relubricable zerk fittings. Bearings shall be designed for air handling service with a minimum L-10 life in excess of 100,000 hours; L-50 500,000 hours at the maximum cataloged operating speed. Bearing mounting plate shall have self-aligning tabs for exact locating and alignment of bearings.

G. Drive: Drive assembly shall be constructed of heavy-gauge galvanized steel. Drives shall be sized for a minimum of 150% of driven horsepower. Machined, cast iron motor sheaves shall be adjustable for final system balance. Fan shall have 2-groove drives.

H. Finish and Coating: The entire fan assembly, excluding the shaft, shall be thoroughly degreased and deburred before application of a rust-preventative primer. After the fan is completely assembled, a finish coat of paint (color to be selected by the COTR) shall be applied to the entire assembly. The fan shaft shall be coated with a petroleum-based rust protectant.

I. Factory Run Test: Fans with motors and drives shall be completely assembled and test run as a unit at the specified operating speed prior to shipment. Each wheel shall be statically and dynamically balanced in accordance with ANSI/AMCA 204-96 "Balance Quality and Vibration Levels for Fans" to Fan Application Category BV-3, Balance Quality Grade G6.3. Balance readings shall be taken by electronic type equipment in the axial, vertical, and horizontal directions on each of the bearings. Records shall be maintained and a written copy shall be available upon request.

J. Accessories: Provide backdraft damper, 12-inch vented roof curb, curb hinge, retaining chain, security hasp, NEMA-4 disconnect switch, and aluminum insect screen.

2.5 MOTORS

A. Comply with requirements in Division 23 Section "Common Motor Requirements for HVAC Equipment."

2.6 SOURCE QUALITY CONTROL

A. Sound-Power Level Ratings: Comply with AMCA 301, "Methods for Calculating Fan Sound Ratings from Laboratory Test Data." Factory test fans according to AMCA 300, "Reverberant Room Method for Sound Testing of Fans." Label fans with the AMCA-Certified Ratings Seal.

B. Fan Performance Ratings: Establish flow rate, pressure, power, air density, speed of rotation, and efficiency by factory tests and ratings according to AMCA 210, "Laboratory Methods of Testing Fans for Rating."

PART 3 - EXECUTION

3.1 INSTALLATION

A. Install power ventilators level and plumb.

B. Support units using vibration isolators. Vibration control devices are specified in Division 23 Section "Mechanical Vibration Control."

C. Support suspended units from structure using threaded steel rods and vibration isolators. Vibration-control devices are specified in Division 23 Section "Mechanical Vibration Control."

D. Install units with clearances for service and maintenance.

E. Label units according to requirements specified in Division 23 Section "Identification for Mechanical."

3.2 CONNECTIONS

A. Duct installation and connection requirements are specified in other Division 23 Sections. Drawings indicate general arrangement of ducts and duct accessories. Make final duct connections with flexible connectors. Flexible connectors are specified in Division 23 Section "Air Duct Accessories."

B. Install ducts adjacent to power ventilators to allow service and maintenance.

C. Ground equipment.

D. Tighten electrical connectors and terminals according to manufacturer's published torque-tightening values. If manufacturer's torque values are not indicated, use those specified in UL 486A and UL 486B.

3.3 FIELD QUALITY CONTROL

A. Equipment Startup Checks:
   1. Verify that shipping, blocking, and bracing are removed.
   2. Verify that unit is secure on mountings and supporting devices and that connections to ducts and electrical components are complete. Verify that proper thermal-overload protection is installed in motors, starters, and disconnect switches.
   3. Verify that cleaning and adjusting are complete.
   4. Disconnect fan drive from motor, verify proper motor rotation direction, and verify fan wheel free rotation and smooth bearing operation. Reconnect fan drive system, align and adjust belts, and install belt guards.
   5. Verify lubrication for bearings and other moving parts.
   6. Verify that manual and automatic volume control and fire and smoke dampers in connected ductwork systems are in fully open position.

7. Disable automatic temperature-control operators.

B. Starting Procedures:
1. Energize motor and adjust fan to indicated rpm.
2. Measure and record motor voltage and amperage.

C. Operational Test: After electrical circuitry has been energized, start units to confirm proper motor rotation and unit operation. Remove malfunctioning units, replace with new units, and retest.

D. Confirm operation of boiler draft fan and control power, interlocked to boiler operation.

E. Test and adjust controls and safeties. Replace damaged and malfunctioning controls and equipment.

F. Shut unit down and reconnect automatic temperature-control operators.

G. Refer to Division 23 Section "Testing, Adjusting, and Balancing for HVAC" for testing, adjusting, and balancing procedures.

H. Replace fan and motor pulleys as required to achieve design airflow.

I. Repair or replace malfunctioning units. Retest as specified above after repairs or replacements are made.

3.4 ADJUSTING

A. Adjust damper linkages for proper damper operation.

B. Adjust belt tension.

C. Lubricate bearings.

3.5 CLEANING

A. On completion of installation, internally clean fans according to manufacturer's written instructions. Remove foreign material and construction debris. Vacuum fan wheel and cabinet.

B. After completing system installation, including outlet fitting and devices, inspect exposed finish. Remove burrs, dirt, and construction debris and repair damaged finishes.

3.6 DEMONSTRATION

A. Train COTR's maintenance personnel to adjust, operate, and maintain power ventilators.
1. Train COTR's maintenance personnel on procedures and schedules for starting and stopping, troubleshooting, servicing, and maintaining equipment and schedules.
2. Review data in maintenance manuals. Refer to Division 01 Section "Project Closeout Requirements."
3. Schedule training with COTR, through Architect, with at least seven days' advance notice.

END OF SECTION 23 3423

SECTION 23 3713-DIFFUSERS, REGISTERS, AND GRILLES

PART 1 - GENERAL

1.1 RELATED DOCUMENTS

A. Drawings and general provisions of the Contract, including General and Supplementary Conditions and Division 01 Specification Sections, apply to this Section.

1.2 SUMMARY

A. This Section includes ceiling-, floor-, duct-, and wall-mounted diffusers, registers, and grilles.

B. Related Sections include the following:

1. Division 08 Section "Louvers and Vents" for fixed and adjustable louvers and wall vents, whether or not they are connected to ducts.
2. Division 23 Section "Air Duct Accessories" for fire and smoke dampers and volume-control dampers not integral to diffusers, registers, and grilles.

1.3 SUBMITTALS

A. Product Data: For each product indicated, include the following:

1. Data Sheet: Indicate materials of construction, finish, and mounting details; and performance data including throw and drop, static-pressure drop, and NC-value noise ratings.
2. Diffuser, Register, and Grille Schedule: Indicate Drawing designation, room location, quantity, model number, size, accessories furnished, NC-value, and pressure drop.

B. Color Samples: For diffusers, registers, and grilles, Architect to select color.

1.4 COORDINATION

A. For installation of air devices in gypsum ceilings, coordinate with the sequencing of the gypsum ceiling installation.

PART 2 - PRODUCTS

2.1 MANUFACTURERS

A. In other Part 2 articles where titles below introduce lists, the following requirements apply to product selection:

1. Manufacturers: Subject to compliance with requirements, provide products equal to Basis of Design indicated, by one of the manufacturers specified.

2.2 GRILLES AND REGISTERS

A. Stainless Steel Supply Grille (Type “SG”):

1. Basis of Design: Titus Model 301RL.
2. Manufacturers:
   a. Carnes.
   b. Krueger.
   c. Nailor Industries of Texas Inc.
   d. Titus.
   e. Tuttle & Bailey.
   f. Price.
3. Material: 304 Stainless Steel.
4. Finish: #04 Mill.
5. Face Blade Arrangement: Adjustable horizontal spaced 3/4 inch apart.
6. Frame: 1-3/8 inches wide.
7. Mounting: Countersunk screw.

B. Stainless Steel Eggcrate Return Register (Type “ER”):

1. Basis of Design: Titus Model 50R-SS.
2. Manufacturers:
   a. Carnes.
   b. Krueger.
   c. Nailor Industries of Texas Inc.
   d. Titus.
   e. Tuttle & Bailey.
   f. Price.
3. Material: 304 Stainless Steel.
4. Finish: #04 Mill.
5. Face Blade Arrangement: Standard core 1/2-inch by 1/2-inch.
6. Frame: 1-3/8 inches wide.
7. Mounting: Countersunk screw.
8. Damper: Adjustable through grille face.

2.3 SOURCE QUALITY CONTROL

A. Verification of Performance: Rate diffusers, registers, and grilles according to ASHRAE 70, "Method of Testing for Rating the Performance of Air Outlets and Inlets."

PART 3 - EXECUTION

3.1 EXAMINATION

A. Examine areas where diffusers, registers, and grilles are to be installed for compliance with requirements for installation tolerances and other conditions affecting performance of equipment.

B. Proceed with installation only after unsatisfactory conditions have been corrected.

3.2 INSTALLATION

A. Install diffusers, registers, and grilles level and plumb, and in accordance with Manufacturer's written instructions.

B. Ceiling- and Wall-Mounted Outlets and Inlets: Drawings indicate general arrangement of ducts, fittings, and accessories. Air outlet and inlet locations have been indicated to achieve design requirements for air volume, noise criteria, airflow pattern, throw, and pressure drop. Make final locations where indicated, as much as practicable.

1. Refer to the Architectural floor plans, sections, and reflected ceiling plans for exact location of air devices. Where architectural features or other items conflict with installation, notify Architect for a determination of final location.
2. Ceiling diffuser outlets installed in gypsum ceilings shall not be installed with plaster frames. At the Contractor's option for supply ductwork, flexible duct may be used to connect diffuser to main duct. Diffuser and an adequate amount of hard duct must be supported from the building structure prior to connection with flexible duct for installation of diffuser. Coordinate the installation of the air devices with the sequencing of the gypsum ceiling installation.
3. Support diffusers, registers, grilles, and plenums independently of ceiling construction.

C. Install diffusers, registers, and grilles with airtight connections to ducts and to allow service and maintenance of dampers, air extractors, and fire dampers.

D. Construct and install duct and plenum connections to diffusers, registers, and grilles in accordance with manufacturer's written instructions.

E. Modify duct systems (transitions, collars, etc.) as required to accommodate actual sizes of grilles, registers, and diffusers.

3.3 ADJUSTING

A. After installation, adjust diffusers, registers, and grilles to air patterns indicated, or as directed, before starting air balancing.

END OF SECTION 23 3713

SECTION 26 0519 - LOW-VOLTAGE ELECTRICAL POWER CONDUCTORS

PART 1 - GENERAL

1.1 RELATED DOCUMENTS

A. Drawings and general provisions of the Contract, including General and Supplementary Conditions and Division 01 Specification Sections, apply to this Section.

1.2 SUMMARY

A. Section Includes:

1. Building wires and cables rated 600 V and less.
2. Connectors, splices, and terminations rated 600 V and less.

PART 2 - PRODUCTS

2.1 CONDUCTORS AND CABLES

A. Manufacturers: Subject to compliance with requirements, provide products by one of the following:

1. Cerro Wire LLC.
2. Service Wire Co.
3. General Cable Technologies Corporation.
4. Southwire Company.

B. Copper Conductors: Comply with NEMA WC 70/ICEA S-95-658.

C. Conductor Insulation: Comply with NEMA WC 70/ICEA S-95-658 for Type THHN-THWN-2.

2.2 CONNECTORS AND SPLICES

A. Manufacturers: Subject to compliance with requirements, provide products by one of the following:

1. Hubbell Power Systems, Inc.
2. Ideal Industries, Inc.
3. O-Z/Gedney; a brand of Emerson Industrial Automation.
4. 3M; Electrical Markets Division.

B. Description: Factory-fabricated connectors and splices of size, ampacity rating, material, type, and class for application and service indicated.

2.3 SYSTEM DESCRIPTION

A. Electrical Components, Devices, and Accessories: Listed and labeled as defined in NFPA 70, by a qualified testing agency, and marked for intended location and application.

B. Comply with NFPA 70, “National Electrical Code.”

PART 3 - EXECUTION

3.1 CONDUCTOR MATERIAL APPLICATIONS

A. Branch Circuits: Copper. Solid for No. 10 AWG and smaller; stranded for No. 8 AWG and larger.

3.2 CONDUCTOR INSULATION AND WIRING METHODS

A. Exposed Branch Circuits, Including in Crawlspaces: Type THHN-THWN-2, single conductors in raceway.

B. Branch Circuits Concealed in Ceilings, Walls, and Partitions: Type THHN-THWN-2, single conductors in raceway.

3.3 INSTALLATION OF CONDUCTORS

A. Complete raceway installation between conductor termination points according to Section 260533 "Raceways and Boxes for Electrical Systems" prior to pulling conductors and cables.

B. Use manufacturer-approved pulling compound or lubricant where necessary; compound used must not deteriorate conductor or insulation. Do not exceed manufacturer's recommended maximum pulling tensions and sidewall pressure values.

C. Use pulling means, including fish tape, cable, rope, and basket-weave wire/cable grips, that will not damage conductors or raceway.

3.4 CONNECTIONS

A. Tighten electrical connectors and terminals according to manufacturer's published torque-tightening values. If manufacturer's torque values are not indicated, use those specified in UL 486A-486B.

3.5 IDENTIFICATION

A. Identify and color-code conductors according to Section 260553 "Identification for Electrical Systems."

3.6 FIELD QUALITY CONTROL

A. Perform the following tests and inspections:

1. Perform each visual and mechanical inspection and electrical test stated in NETA Acceptance Testing Specification. Certify compliance with test parameters.

B. Conductors will be considered defective if they do not pass tests and inspections.

END OF SECTION 260519

SECTION 26 0526 - GROUNDING AND BONDING FOR ELECTRICAL SYSTEMS

PART 1 - GENERAL

1.1 RELATED DOCUMENTS

A. Drawings and general provisions of the Contract, including General and Supplementary Conditions and Division 01 Specification Sections, apply to this Section.

1.2 SUMMARY

A. Section includes grounding and bonding systems and equipment.

1.3 QUALITY ASSURANCE

A. Electrical Components, Devices, and Accessories: Listed and labeled as defined in NFPA 70, by a qualified testing agency, and marked for intended location and application.

B. Comply with UL 467 for grounding and bonding materials and equipment.

PART 2 - PRODUCTS

2.1 MANUFACTURERS

A. Manufacturers: Subject to compliance with requirements, provide products by one of the following:

1. Burndy; Part of Hubbell Electrical Systems.
2. ERICO International Corporation.
3. Fushi Copperweld Inc.
4. Harger Lightning and Grounding.
5. ILSCO.
6. O-Z/Gedney; Emerson Electric Co. Automation Solutions, Appleton Group.
7. Robbins Lightning, Inc.
8. Siemens Industry, Inc., Energy Management Division .

2.2 SYSTEM DESCRIPTION

A. Electrical Components, Devices, and Accessories: Listed and labeled as defined in NFPA 70, by a qualified testing agency, and marked for intended location and application.

B. Comply with UL 467 for grounding and bonding materials and equipment.

2.3 CONDUCTORS

A. Insulated Conductors: Tinned-copper wire or cable insulated for 600 V unless otherwise required by applicable Code or authorities having jurisdiction.

2.4 CONNECTORS

A. Listed and labeled by an NRTL acceptable to authorities having jurisdiction for applications in which used and for specific types, sizes, and combinations of conductors and other items connected.

PART 3 - EXECUTION

3.1 APPLICATIONS

A. Conductors: Install solid conductor for No. 8 AWG and smaller, and stranded conductors for No. 6 AWG and larger unless otherwise indicated.

3.2 EQUIPMENT GROUNDING

A. Install insulated equipment grounding conductors with all branch circuits.

B. Install insulated equipment grounding conductors with the following items, in addition to those required by NFPA 70:

1. Branch circuits.
2. Lighting circuits.
3. Three-phase motor and appliance branch circuits.

C. Air-Duct Equipment Circuits: Install insulated equipment grounding conductor to duct-mounted electrical devices operating at 120 V and more, including air cleaners, heaters, dampers, humidifiers, and other duct electrical equipment. Bond conductor to each unit and to air duct and connected metallic piping.

3.3 INSTALLATION

A. Grounding Conductors: Route along shortest and straightest paths possible unless otherwise indicated or required by Code. Avoid obstructing access or placing conductors where they may be subjected to strain, impact, or damage.

B. Bonding Straps and Jumpers: Install in locations accessible for inspection and maintenance except where routed through short lengths of conduit.

1. Bonding to Equipment Mounted on Vibration Isolation Hangers and Supports: Install bonding so vibration is not transmitted to rigidly mounted equipment.

C. Bonding Interior Metal Ducts: Bond metal air ducts to equipment grounding conductors of associated fans, blowers, electric heaters, and air cleaners. Install bonding jumper to bond across flexible duct connections to achieve continuity.

3.4 FIELD QUALITY CONTROL

A. Perform tests and inspections.

1. After installing grounding system but before permanent electrical circuits have been energized, test for compliance with requirements.
2. Inspect physical and mechanical condition. Verify tightness of accessible, bolted, electrical connections with a calibrated torque wrench according to manufacturer's written instructions.

B. Grounding system will be considered defective if it does not pass tests and inspections.

END OF SECTION 260526

SECTION 26 0529 - HANGERS AND SUPPORTS FOR ELECTRICAL SYSTEMS

PART 1 - GENERAL

1.1 RELATED DOCUMENTS

A. Drawings and general provisions of the Contract, including General and Supplementary Conditions and Division 01 Specification Sections, apply to this Section.

1.2 SUMMARY

A. This Section includes the following:

1. Hangers and supports for electrical equipment and systems.

1.3 DEFINITIONS

A. EMT: Electrical metallic tubing.

B. RMC: Rigid metal conduit.

1.4 QUALITY ASSURANCE

A. Comply with NFPA 70, “National Electrical Code.”

PART 2 - PRODUCTS

2.1 SUPPORT, ANCHORAGE, AND ATTACHMENT COMPONENTS

A. Steel Slotted Support Systems: Comply with MFMA-4, factory-fabricated components for field assembly.

1. Manufacturers: Subject to compliance with requirements, provide products by one of the following:

   a. Allied Tube & Conduit; Atkore International.
   b. B-Line, Eaton Electrical Sector.
   c. Caddy; nVent.
   d. ABB, Electrification Products Division.
   e. Unistrut; Atkore International.

2. Metallic Coatings: Hot-dip galvanized after fabrication and applied according to MFMA-4.
3. Channel Dimensions: Selected for applicable load criteria.

B. Raceway and Cable Supports: As described in NECA 1 and NECA 101.

C. Conduit and Cable Support Devices: Steel and malleable-iron hangers, clamps, and associated fittings, designed for types and sizes of raceway or cable to be supported.

D. Mounting, Anchoring, and Attachment Components: Items for fastening electrical items or their supports to building surfaces include the following:

1. Powder-Actuated Fasteners: Threaded-steel stud, for use in hardened portland cement concrete, or steel, with tension, shear, and pullout capacities appropriate for supported loads and building materials where used.

a. Available Manufacturers: Subject to compliance with requirements, manufacturers offering products that may be incorporated into the Work include, but are not limited to, the following:

1) Hilti Inc.
2) ITW Ramset/Red Head; a division of Illinois Tool Works, Inc.
3) MKT Fastening, LLC.
4) Simpson Strong-Tie Co., Inc.; Masterset Fastening Systems Unit.

2. Clamps for Attachment to Steel Structural Elements: MSS SP-58, type suitable for attached structural element.
3. Hanger Rods: Threaded steel.

PART 3 - EXECUTION

3.1 APPLICATION

A. Comply with NECA 1 and NECA 101 for application of hangers and supports for electrical equipment and systems except if requirements in this Section are stricter.

B. Maximum Support Spacing and Minimum Hanger Rod Size for Raceway: Space supports for EMT, and RMC as required by NFPA 70. Minimum rod size shall be 1/4 inch (6 mm) in diameter.

C. Multiple Raceways: Install trapeze-type supports fabricated with steel slotted or other support system, sized so capacity can be increased by at least 25 percent in future without exceeding specified design load limits.

1. Secure raceways to these supports with two-bolt conduit clamps.

3.2 SUPPORT INSTALLATION

A. Comply with NECA 1 and NECA 101 for installation requirements except as specified in this Article.

B. Strength of Support Assemblies: Where not indicated, select sizes of components so strength will be adequate to carry present and future static loads within specified loading limits. Minimum static design load used for strength determination shall be weight of supported components plus 200 lb (90 kg).

C. Mounting and Anchorage of Surface-Mounted Equipment and Components: Anchor and fasten electrical items and their supports to building structural elements by the following methods unless otherwise indicated by code:

1. To Masonry: Approved toggle-type bolts on hollow masonry units and expansion anchor fasteners on solid masonry units.
2. To Existing Concrete: Expansion anchor fasteners.
3. Instead of expansion anchors, powder-actuated driven threaded studs provided with lock washers and nuts may be used in existing standard-weight concrete 4 inches (100 mm) thick or greater. Do not use for anchorage to lightweight-aggregate concrete or for slabs less than 4 inches (100 mm) thick.
4. To Steel: Beam clamps (MSS Type 19, 21, 23, 25, or 27) complying with MSS SP-69.
5. To Light Steel: Sheet metal screws.
6. Items Mounted on Hollow Walls and Nonstructural Building Surfaces: Mount cabinets, panelboards, disconnect switches, control enclosures, pull and junction boxes, transformers, and other devices on slotted-channel racks attached to substrate.

D. Drill holes for expansion anchors in concrete at locations and to depths that avoid reinforcing bars.

3.3 INSTALLATION OF FABRICATED METAL SUPPORTS

A. Cut, fit, and place miscellaneous metal supports accurately in location, alignment, and elevation to support and anchor electrical materials and equipment.

B. Field Welding: Comply with AWS D1.1/D1.1M.

3.4 PAINTING

A. Touchup: Clean field welds and abraded areas of shop paint. Paint exposed areas immediately after erecting hangers and supports. Use same materials as used for shop painting. Comply with SSPC-PA 1 requirements for touching up field-painted surfaces.

1. Apply paint by brush or spray to provide minimum dry film thickness of 2.0 mils (0.05 mm).

B. Galvanized Surfaces: Clean welds, bolted connections, and abraded areas and apply galvanizing-repair paint to comply with ASTM A 780.

END OF SECTION 260529

SECTION 26 0533 - RACEWAYS AND BOXES FOR ELECTRICAL SYSTEMS

PART 1 - GENERAL

1.1 RELATED DOCUMENTS

A. Drawings and general provisions of the Contract, including General and Supplementary Conditions and Division 01 Specification Sections, apply to this Section.

1.2 SUMMARY

A. Section Includes:

1. Metal conduits, tubing, and fittings.
2. Boxes, enclosures, and cabinets.

1.3 DEFINITIONS

A. GRC: Galvanized rigid steel conduit.

PART 2 - PRODUCTS

2.1 METAL CONDUITS, TUBING, AND FITTINGS

A. Manufacturers: Subject to compliance with requirements, provide products by the following:

1. AFC Cable Systems; a part of Atkore International.
2. Allied Tube & Conduit; a part of Atkore International.
3. Anamet Electrical, Inc.
4. Electri-Flex Company.
5. O-Z/Gedney; a brand of Emerson Industrial Automation.
6. Republic Conduit.
7. Southwire Company.
8. Thomas & Betts Corporation; A Member of the ABB Group.
9. Western Tube and Conduit Corporation.

B. Listing and Labeling: Metal conduits, tubing, and fittings shall be listed and labeled as defined in NFPA 70, by a qualified testing agency, and marked for intended location and application.

C. GRC: Comply with ANSI C80.1 and UL 6.

D. EMT: Comply with ANSI C80.3 and UL 797.

E. FMC: Comply with UL 1; zinc-coated steel.

F. LFMC: Flexible steel conduit with PVC jacket and complying with UL 360.

G. Fittings for Metal Conduit: Comply with NEMA FB 1 and UL 514B.

1. Fittings for EMT:

a. Material: Steel.
b. Type: Compression.

H. Joint Compound for GRC: Approved, as defined in NFPA 70, by authorities having jurisdiction for use in conduit assemblies, and compounded for use to lubricate and protect threaded conduit joints from corrosion and to enhance their conductivity.

2.2 BOXES, ENCLOSURES, AND CABINETS

A. Manufacturers: Subject to compliance with requirements, provide products by one of the following:

1. Adalet.
2. Eaton business (Crouse-Hinds).
3. EGS/Appleton Electric.
4. Erickson Electrical Equipment Company.
5. Hoffman; a brand of Pentair Equipment Protection.
6. Hubbell Incorporated.
7. Milbank Manufacturing Co.
8. MonoSystems, Inc.
9. O-Z/Gedney; a brand of Emerson Industrial Automation.
10. RACO; a Hubbell Company.
11. Spring City Electrical Manufacturing Company.
12. ABB (Electrification Division).
13. Thomas & Betts Corporation.
14. Wiremold / Legrand.

B. General Requirements for Boxes, Enclosures, and Cabinets: Boxes, enclosures, and cabinets installed in wet locations shall be listed for use in wet locations.

C. Sheet Metal Outlet and Device Boxes: Comply with NEMA OS 1 and UL 514A.

D. Luminaire Outlet Boxes: Nonadjustable, designed for attachment of luminaire weighing 50 lb (23 kg). Outlet boxes designed for attachment of luminaires weighing more than 50 lb (23 kg) shall be listed and marked for the maximum allowable weight.

E. Small Sheet Metal Pull and Junction Boxes: NEMA OS 1.

F. Device Box Dimensions: 4 inches square by 2-1/8 inches deep (100 mm square by 60 mm deep).

PART 3 - EXECUTION

3.1 RACEWAY APPLICATION

A. Outdoors: Apply raceway products as specified below unless otherwise indicated:

1. Exposed Conduit: GRC.
2. Concealed Conduit, Aboveground: GRC.
3. Connection to Vibrating Equipment (Including Transformers and Hydraulic, Pneumatic, Electric Solenoid, or Motor-Driven Equipment): LFMC.
4. Boxes and Enclosures, Aboveground: NEMA 250, Type 4.

B. Indoors: Apply raceway products as specified below unless otherwise indicated:

1. Exposed, Not Subject to Physical Damage: EMT.
2. Exposed, Not Subject to Severe Physical Damage: EMT.
3. Exposed and Subject to Severe Physical Damage: GRC. Raceway locations include the following:

   a. Panda enclosures.

4. Concealed in Ceilings and Interior Walls and Partitions: EMT.
5. Connection to Vibrating Equipment (Including Transformers and Hydraulic, Pneumatic, Electric Solenoid, or Motor-Driven Equipment): FMC, except use LFMC in damp or wet locations.
6. Damp or Wet Locations: GRC.
7. Boxes and Enclosures: NEMA 250, Type 1, except use NEMA 250, Type 4 stainless steel in damp or wet locations.

C. Minimum Raceway Size: 3/4-inch (21-mm) trade size.

D. Raceway Fittings: Compatible with raceways and suitable for use and location.

1. Rigid Steel Conduit: Use threaded rigid steel conduit fittings unless otherwise indicated. Comply with NEMA FB 2.10.
2. EMT: Use compression, steel fittings. Comply with NEMA FB 2.10.
3. Flexible Conduit: Use only fittings listed for use with flexible conduit. Comply with NEMA FB 2.20.

3.2 INSTALLATION

A. Comply with NECA 1 and NECA 101 for installation requirements except where requirements on Drawings or in this article are stricter. Comply with NFPA 70 limitations for types of raceways allowed in specific occupancies.

B. Keep raceways at least 6 inches (150 mm) away from parallel runs of flues and steam or hot-water pipes. Install horizontal raceway runs above water and steam piping.

C. Complete raceway installation before starting conductor installation.

D. Comply with requirements in Section 260529 "Hangers and Supports for Electrical Systems" for hangers and supports.

E. Install no more than the equivalent of three 90-degree bends in any conduit run except for control wiring conduits, for which fewer bends are allowed. Support within 12 inches (300 mm) of changes in direction.

F. Conceal conduit and EMT within finished walls, ceilings, and floors unless otherwise indicated. Install conduits parallel or perpendicular to building lines.

G. Support conduit within 12 inches (300 mm) of enclosures to which attached.

H. Raceways Embedded in Slabs:

1. Run conduit larger than 1-inch (27-mm) trade size, parallel or at right angles to main reinforcement. Where at right angles to reinforcement, place conduit close to slab support. Secure raceways to reinforcement at maximum10-foot (3-m) intervals.
2. Arrange raceways to cross building expansion joints at right angles with expansion fittings.
3. Arrange raceways to keep a minimum of 2 inches (50 mm) of concrete cover in all directions.
4. Do not embed threadless fittings in concrete unless specifically approved by Architect for each specific location.

I. Stub-ups to Above Recessed Ceilings:

1. Use EMT or GRC for raceways.
2. Use a conduit bushing or insulated fitting to terminate stub-ups not terminated in hubs or in an enclosure.

J. Threaded Conduit Joints, Exposed to Wet, Damp, Corrosive, or Outdoor Conditions: Apply listed compound to threads of raceway and fittings before making up joints. Follow compound manufacturer's written instructions.

K. Terminate threaded conduits into threaded hubs or with locknuts on inside and outside of boxes or cabinets. Install bushings on conduits up to 1-1/4-inch (35mm) trade size and insulated throat metal bushings on 1-1/2-inch (41-mm) trade size and larger conduits terminated with locknuts. Install insulated throat metal grounding bushings on service conduits.

L. Install raceways square to the enclosure and terminate at enclosures with locknuts. Install locknuts hand tight plus 1/4 turn more.

M. Do not rely on locknuts to penetrate nonconductive coatings on enclosures. Remove coatings in the locknut area prior to assembling conduit to enclosure to assure a continuous ground path.

N. Cut conduit perpendicular to the length. For conduits 2-inch (53-mm) trade size and larger, use roll cutter or a guide to make cut straight and perpendicular to the length.

O. Install pull wires in empty raceways. Use polypropylene or monofilament plastic line with not less than 200-lb (90-kg) tensile strength. Leave at least 12 inches (300 mm) of slack at each end

of pull wire. Cap underground raceways designated as spare above grade alongside raceways in use.

P. Install raceway sealing fittings at accessible locations according to NFPA 70 and fill them with listed sealing compound. For concealed raceways, install each fitting in a flush steel box with a blank cover plate having a finish similar to that of adjacent plates or surfaces. Install raceway sealing fittings according to NFPA 70.

Q. Install devices to seal raceway interiors at accessible locations. Locate seals so no fittings or boxes are between the seal and the following changes of environments. Seal the interior of all raceways at the following points:

1. Where conduits pass from warm to cold locations, such as boundaries of refrigerated spaces.
2. Where an underground service raceway enters a building or structure.
3. Where otherwise required by NFPA 70.

R. Expansion-Joint Fittings:

1. Install type and quantity of fittings that accommodate temperature change listed for each of the following locations:

   a. Outdoor Locations Not Exposed to Direct Sunlight: 125 deg F (70 deg C) temperature change.
   b. Outdoor Locations **Exposed** to Direct Sunlight: 155 deg F (86 deg C) temperature change.
   c. Indoor Spaces Connected with Outdoors without Physical Separation: 125 deg F (70 deg C) temperature change.
   d. Attics: 135 deg F (75 deg C) temperature change.

2. Install fitting(s) that provide expansion and contraction for at least 0.000078 inch per foot of length of straight run per deg F (0.0115 mm per meter of length of straight run per deg C) of temperature change for metal conduits.
3. Install expansion fittings at all locations where conduits cross building or structure expansion joints.
4. Install each expansion-joint fitting with position, mounting, and piston setting selected according to manufacturer's written instructions for conditions at specific location at time of installation. Install conduit supports to allow for expansion movement.

S. Flexible Conduit Connections: Comply with NEMA RV 3. Use a maximum of 72 inches (1830 mm) of flexible conduit for recessed and semirecessed luminaires, equipment subject to vibration, noise transmission, or movement; and for transformers and motors.

1. Use LFMC in damp or wet locations subject to severe physical damage.
2. Use LFMC in damp or wet locations not subject to severe physical damage.

T. Mount boxes at heights indicated on Drawings. If mounting heights of boxes are not individually indicated, give priority to ADA requirements. Install boxes with height measured to center of box unless otherwise indicated.

U. Recessed Boxes in Masonry Walls: Saw-cut opening for box in center of cell of masonry block, and install box flush with surface of wall. Prepare block surfaces to provide a flat surface for a raintight connection between box and cover plate or supported equipment and box.

V. Horizontally separate boxes mounted on opposite sides of walls so they are not in the same vertical channel.

W. Locate boxes so that cover or plate will not span different building finishes.

X. Support boxes of three gangs or more from more than one side by spanning two framing members or mounting on brackets specifically designed for the purpose.

Y. Fasten junction and pull boxes to or support from building structure. Do not support boxes by conduits.

END OF SECTION 260533

SECTION 26 0553 - IDENTIFICATION FOR ELECTRICAL SYSTEMS

PART 1 - GENERAL

1.1 RELATED DOCUMENTS

A. Drawings and general provisions of the Contract, including General and Supplementary Conditions and Division 01 Specification Sections, apply to this Section.

1.2 SUMMARY

A. Section Includes:

1. Identification for raceways.
2. Identification for conductors.
3. Warning labels and signs.
4. Equipment identification labels.

1.3 QUALITY ASSURANCE

A. Comply with ANSI A13.1, “Scheme for Identification of Piping Systems”.

B. Comply with NFPA 70, “National Electrical Code.”

C. Comply with 29 CFR 1910.144 and 29 CFR 1910.145.

D. Comply with ANSI Z535.4 for safety signs and labels.

1.4 COORDINATION

A. Coordinate identification names, abbreviations, colors, and other features with requirements in other Sections requiring identification applications, Drawings, Shop Drawings, manufacturer's wiring diagrams, and the Operation and Maintenance Manual; and with those required by codes, standards, and 29 CFR 1910.145. Use consistent designations throughout Project.

B. Coordinate installation of identifying devices with completion of covering and painting of surfaces where devices are to be applied.

C. Coordinate installation of identifying devices with location of access panels and doors.

D. Install identifying devices before installing acoustical ceilings and similar concealment.

PART 2 - PRODUCTS

2.1 POWER RACEWAY IDENTIFICATION MATERIALS

A. Comply with ANSI A13.1 for minimum size of letters for legend and for minimum length of color field for each raceway size.

B. Colors for Raceways Carrying Circuits at 600 V or Less:

1. Black letters on an orange field.
2. Legend: Indicate voltage.

C. Snap-Around Labels for Raceways Carrying Circuits at 600 V or Less: Slit, pretensioned, flexible, preprinted, color-coded acrylic sleeve, with diameter sized to suit diameter of raceway or cable it identifies and to stay in place by gripping action.

2.2 CONDUCTOR IDENTIFICATION MATERIALS

A. Color-Coding Conductor Tape: Colored, self-adhesive vinyl tape not less than 3 mils (0.08 mm) thick by 1 to 2 inches (25 to 50 mm) wide.

2.3 WARNING LABELS AND SIGNS

A. Comply with NFPA 70 and 29 CFR 1910.145.

B. Self-Adhesive Warning Labels: Factory-printed, multicolor, pressure-sensitive adhesive labels, configured for display on front cover, door, or other access to equipment unless otherwise indicated.

C. Baked-Enamel Warning Signs:

1. Preprinted aluminum signs, punched or drilled for fasteners, with colors, legend, and size required for application.
2. 1/4-inch (6.4-mm) grommets in corners for mounting.
3. Nominal size, 7 by 10 inches (180 by 250 mm).

D. Warning label and sign shall include, but are not limited to, the following legends:

1. Multiple Power Source Warning: "DANGER - ELECTRICAL SHOCK HAZARD - EQUIPMENT HAS MULTIPLE POWER SOURCES."
2. Workspace Clearance Warning: "WARNING - OSHA REGULATION - AREA IN FRONT OF ELECTRICAL EQUIPMENT MUST BE KEPT CLEAR FOR 36 INCHES (915 MM)."

2.4 INSTRUCTION SIGNS

A. Engraved, laminated acrylic or melamine plastic, minimum 1/16 inch (1.6 mm) thick for signs up to 20 sq. inches (129 sq. cm) and 1/8 inch (3.2 mm) thick for larger sizes.

1. Engraved legend with black letters on white face.
2. Punched or drilled for mechanical fasteners.
3. Framed with mitered acrylic molding and arranged for attachment at applicable equipment.

2.5 EQUIPMENT IDENTIFICATION LABELS

A. Engraved, Laminated Acrylic or Melamine Label: Punched or drilled for screw mounting. White letters on a black background. Minimum letter height shall be 3/8 inch (10 mm).

B. Stenciled Legend: In nonfading, waterproof, black ink or paint. Minimum letter height shall be 1 inch (25 mm).

2.6 CABLE TIES

A. General-Purpose Cable Ties: Fungus inert, self extinguishing, one piece, self locking, Type 6/6 nylon.

1. Minimum Width: 3/16 inch (5 mm).
2. Tensile Strength at 73 deg F (23 deg C), According to ASTM D 638: 12,000 psi (82.7 MPa).
3. Temperature Range: Minus 40 to plus 185 deg F (Minus 40 to plus 85 deg C).
4. Color: Black except where used for color-coding.

2.7 MISCELLANEOUS IDENTIFICATION PRODUCTS

A. Paint: Comply with requirements in painting Sections for paint materials and application requirements. Select paint system applicable for surface material and location (exterior or interior).

B. Fasteners for Labels and Signs: Self-tapping, stainless-steel screws or stainless-steel machine screws with nuts and flat and lock washers.

PART 3 - EXECUTION

3.1 INSTALLATION

A. Verify identity of each item before installing identification products.

B. Location: Install identification materials and devices at locations for most convenient viewing without interference with operation and maintenance of equipment.

C. Apply identification devices to surfaces that require finish after completing finish work.

D. Attach signs and plastic labels that are not self-adhesive type with mechanical fasteners appropriate to the location and substrate.

E. Cable Ties: For attaching tags. Use general-purpose type, except as listed below:

1. Outdoors: UV-stabilized nylon.
2. In Spaces Handling Environmental Air: Plenum rated.

F. Painted Identification: Comply with requirements in painting Sections for surface preparation and paint application.

3.2 IDENTIFICATION SCHEDULE

A. Accessible Raceways within Buildings: Identify the covers of each junction and pull box of the following systems with self-adhesive vinyl labels with the wiring system legend and system voltage. System legends shall be as follows:

1. Emergency Power.
2. Power.

B. Power-Circuit Conductor Identification, 600 V or Less: For conductors in vaults, pull and junction boxes, manholes, and handholes, use color-coding conductor tape to identify the phase.

1. Color-Coding for Phase and Voltage Level Identification, 600 V or Less: Use colors listed below for ungrounded service feeder and branch-circuit conductors.

a. Color shall be factory applied or field applied for sizes larger than No. 8 AWG, if authorities having jurisdiction permit.
b. Colors for 208/120-V Circuits:

1) Phase A: Black.
2) Phase B: Red.
3) Phase C: Blue.
4) Neutral: White

c. Colors for 480/277-V Circuits:

1) Phase A: Brown.
2) Phase B: Orange.
3) Phase C: Yellow.
4) Neutral: Gray

C. Warning Labels for Indoor Cabinets, Boxes, and Enclosures for Power and Lighting: Self-adhesive warning labels.

1. Comply with 29 CFR 1910.145.
2. Identify system voltage with black letters on an orange background.
3. Apply to exterior of door, cover, or other access.

D. Equipment Identification Labels: On each unit of equipment, install unique designation label that is consistent with wiring diagrams, schedules, and the Operation and Maintenance Manual. Apply labels to disconnect switches and protection equipment, central or master units, control panels, control stations, terminal cabinets, and racks of each system. Systems include power, lighting, control, communication, signal, monitoring, and alarm systems unless equipment is provided with its own identification.

1. Labeling Instructions:

a. Indoor Equipment: Engraved, laminated acrylic or melamine label. Unless otherwise indicated, provide a single line of text with 1/2-inch- (13-mm-) high

letters on 1-1/2-inch- (38-mm-) high label; where two lines of text are required, use labels 2 inches (50 mm) high.

b. Outdoor Equipment: Engraved, laminated acrylic or melamine label.
c. Fasten labels with appropriate mechanical fasteners that do not change the NEMA or NRTL rating of the enclosure.

2. Equipment to Be Labeled:

a. Panelboards: Typewritten directory of circuits in the location provided by panelboard manufacturer. Panelboard identification shall be engraved, laminated acrylic or melamine label. Update panelboard directories for panels with new work.
b. Enclosures and electrical cabinets.
c. Access doors and panels for concealed electrical items.
d. Emergency system boxes and enclosures.
e. Enclosed switches.
f. Enclosed controllers.
g. Variable-speed controllers.
h. Monitoring and control equipment.

END OF SECTION 260553

SECTION 26 2416 - PANELBOARDS

PART 1 - GENERAL

1.1 RELATED DOCUMENTS

A. Drawings and general provisions of the Contract, including General and Supplementary Conditions and Division 01 Specification Sections, apply to this Section.

1.2 SUMMARY

A. Section Includes:

1. Lighting and appliance branch-circuit panelboards.

1.3 ACTION SUBMITTALS

A. Product Data: For each type of panelboard, overcurrent protective device, and component indicated. Include dimensions and manufacturers' technical data on features, performance, electrical characteristics, ratings, and finishes.

1.4 INFORMATIONAL SUBMITTALS

A. Qualification Data: For qualified testing agency.

B. Field Quality-Control Reports:

1. Test procedures used.
2. Test results that comply with requirements.
3. Results of failed tests and corrective action taken to achieve test results that comply with requirements.

C. Panelboard Schedules: For installation in panelboards.

1.5 QUALITY ASSURANCE

A. Source Limitations: Obtain panelboards, overcurrent protective devices, components, and accessories from single source from single manufacturer.

B. Electrical Components, Devices, and Accessories: Listed and labeled as defined in NFPA 70, by a qualified testing agency, and marked for intended location and application.

C. Comply with NEMA PB 1, “Panelboards.”

D. Comply with NFPA 70, “National Electrical Code.”

PART 2 - PRODUCTS

2.1 LIGHTING AND APPLIANCE BRANCH-CIRCUIT PANELBOARDS

A. Manufacturers: Subject to compliance with requirements, provide products by:

1. Eaton Electrical Sector; Eaton Corporation.
2. General Electric Company; GE Energy Management - Electrical Distribution.
3. Siemens Energy.
4. Square D; a brand of Schneider Electric.

B. Branch Overcurrent Protective Devices: Bolt-on circuit breakers, replaceable without disturbing adjacent units.

2.2 DISCONNECTING AND OVERCURRENT PROTECTIVE DEVICES

A. Manufacturers: Subject to compliance with requirements, provide products by:

1. Eaton Electrical Inc.; Cutler-Hammer Business Unit.

B. Molded-Case Circuit Breaker (MCCB): Comply with UL 489, with interrupting capacity to meet available fault currents.

1. Thermal-Magnetic Circuit Breakers: Inverse time-current element for low-level overloads, and instantaneous magnetic trip element for short circuits.
2. Molded-Case Circuit-Breaker (MCCB) Features and Accessories:

a. Standard frame sizes, trip ratings, and number of poles.
b. Lugs: Mechanical style, suitable for number, size, trip ratings, and conductor materials.

PART 3 - EXECUTION

3.1 INSTALLATION

A. Install panelboard accessories according to NEMA PB 1.1.

B. Install overcurrent protective devices.

C. Comply with NECA 1, “Standard Practice for Good Workmanship in Electrical Construction.”

3.2 IDENTIFICATION

A. Identify field-installed conductors, interconnecting wiring, and components; provide warning signs complying with Section 260553 "Identification for Electrical Systems."

B. Provide new updated directory to indicate installed circuit loads; incorporate existing and new loads on directory. Obtain approval before installing. Use a computer or typewriter to create directory; handwritten directories are not acceptable.

C. Device Nameplates: Label each branch circuit device in distribution panelboards with a nameplate complying with requirements for identification specified in Section 260553 "Identification for Electrical Systems."

3.3 FIELD QUALITY CONTROL

A. Acceptance Testing Preparation:

1. Test continuity of each circuit.

B. Tests and Inspections:

1. Perform each visual and mechanical inspection and electrical test stated in NETA Acceptance Testing Specification. Certify compliance with test parameters.
2. Correct malfunctioning units on-site, where possible, and retest to demonstrate compliance; otherwise, replace with new units and retest.

C. Circuit breakers will be considered defective if they do not pass tests and inspections.

END OF SECTION 262416

SECTION 26 2913.03 – MANUAL AND MAGNETIC MOTOR CONTROLLERS

PART 1 - GENERAL

1.1 RELATED DOCUMENTS

A. Drawings and general provisions of the Contract, including General and Supplementary Conditions and Division 01 Specification Sections, apply to this Section.

1.2 SUMMARY

A. Section includes the following enclosed controllers rated 600 V and less:

1. Full-voltage magnetic.

B. Related Section:

1. Section 262923 "Variable-Frequency Motor Controllers" for general-purpose, ac, adjustable-frequency, pulse-width-modulated controllers for use on variable torque loads in ranges up to 200 hp.

1.3 DEFINITIONS

A. CPT: Control power transformer.

B. MCP: Motor circuit protector.

C. N.C.: Normally closed.

D. N.O.: Normally open.

E. OCPD: Overcurrent protective device.

1.4 ACTION SUBMITTALS

A. Product Data: For each type of enclosed controller. Include manufacturer's technical data on features, performance, electrical characteristics, ratings, and enclosure types and finishes.

B. Shop Drawings: For each enclosed controller. Include dimensioned plans, elevations, sections, details, and required clearances and service spaces around controller enclosures.

1. Show tabulations of the following:

a. Each installed unit's type and details.
b. Factory-installed devices.
c. Nameplate legends.
d. Short-circuit current rating of integrated unit.

e. Listed and labeled for integrated short-circuit current (withstand) rating of OCPDs in combination controllers by an NRTL acceptable to authorities having jurisdiction.
f. Features, characteristics, ratings, and factory settings of individual OCPDs in combination controllers.

2. Wiring Diagrams: For power, signal, and control wiring.

1.5 CLOSEOUT SUBMITTALS

A. Operation and Maintenance Data: For enclosed controllers to include in emergency, operation, and maintenance manuals. In addition to items specified in Section 017823 "Operation and Maintenance Data," include the following:

1. Routine maintenance requirements for enclosed controllers and installed components.
2. Manufacturer's written instructions for testing and adjusting MCP trip settings.
3. Manufacturer's written instructions for setting field-adjustable overload relays.

1.6 QUALITY ASSURANCE

A. Electrical Components, Devices, and Accessories: Listed and labeled as defined in NFPA 70, by a qualified testing agency, and marked for intended location and application.

B. Comply with NFPA 70, “National Electrical Code.”

1.7 DELIVERY, STORAGE, AND HANDLING

A. Store enclosed controllers indoors in clean, dry space with uniform temperature to prevent condensation. Protect enclosed controllers from exposure to dirt, fumes, water, corrosive substances, and physical damage.

1.8 PROJECT CONDITIONS

A. Environmental Limitations: Rate equipment for continuous operation under the following conditions unless otherwise indicated:

1. Ambient Temperature: Not less than minus 22 deg F (minus 30 deg C) and not exceeding 104 deg F (40 deg C).
2. Altitude: Not exceeding 6600 feet (2010 m).

1.9 COORDINATION

A. Coordinate layout and installation of enclosed controllers with other construction including conduit, piping, equipment, and adjacent surfaces. Maintain required workspace clearances and required clearances for equipment access doors and panels.

B. Coordinate installation of equipment supports, and roof penetrations.

PART 2 - PRODUCTS

2.1 COMBINATION FULL-VOLTAGE MAGNETIC MOTOR CONTROLLER

A. General Requirements for Full-Voltage Controllers: Comply with NEMA ICS 2, general purpose, Class A.

B. Magnetic Controllers: Full voltage, across the line, electrically held.

1. Manufacturers: Subject to compliance with requirements, provide products by one of the following:

a. Eaton.
b. ABB-GE Industrial Solutions.
c. Siemens Industry, Inc.
d. Square D; a brand of Schneider Electric.

2. Configuration: Nonreversing.
3. Contactor Coils: Pressure-encapsulated type.

a. Operating Voltage: Depending on contactor NEMA size and line-voltage rating, manufacturer's standard matching control power or line voltage.

4. Power Contacts: Totally enclosed, double-break, silver-cadmium oxide; assembled to allow inspection and replacement without disturbing line or load wiring.
5. Control Circuits: 120-V ac; obtained from integral CPT, with primary and secondary fuses, with CPT of sufficient capacity to operate integral devices and remotely located pilot, indicating, and control devices.

a. CPT Spare Capacity: 50 VA.

6. Bimetallic Overload Relays:

a. Inverse-time-current characteristic.
b. Class 20 tripping characteristic.
c. Heaters in each phase matched to nameplate full-load current of actual protected motor and with appropriate adjustment for duty cycle.

C. Combination Magnetic Controller: Factory-assembled combination of magnetic controller, OCPD, and disconnecting means.

1. Manufacturers: Subject to compliance with requirements, provide products by one of the following:

a. Eaton Electrical Inc.; Cutler-Hammer Business Unit.
b. General Electric Company; GE Consumer & Industrial - Electrical Distribution.
c. Siemens Energy & Automation, Inc.
d. Square D; a brand of Schneider Electric.

2. MCP Disconnecting Means:

a. UL 489, NEMA AB 1, and NEMA AB 3, with interrupting capacity to comply with available fault currents, instantaneous-only circuit breaker with front-mounted, field-adjustable, short-circuit trip coordinated with motor locked-rotor amperes.
b. Lockable Handle: Accepts three padlocks and interlocks with cover in closed position.
c. Auxiliary contacts "a" and "b" arranged to activate with MCP handle.

2.2 ENCLOSURES

A. Enclosed Controllers: NEMA ICS 6, to comply with environmental conditions at installed location.

1. Outdoor Locations: Type 4X, stainless steel.

2.3 ACCESSORIES

A. General Requirements for Control Circuit and Pilot Devices: NEMA ICS 5; factory installed in controller enclosure cover unless otherwise indicated.

1. Push Buttons, Pilot Lights, and Selector Switches: Heavy-duty, oiltight type.

a. Push Buttons: Unguarded types; momentary as indicated.
b. Pilot Lights: LED types; colors as indicated; push to test.
c. Selector Switches: Rotary type.

B. Breather and drain assemblies, to maintain interior pressure and release condensation in Type 4X enclosures installed outdoors or in unconditioned interior spaces subject to humidity and temperature swings.

PART 3 - EXECUTION

3.1 EXAMINATION

A. Examine areas and surfaces to receive enclosed controllers, with Installer present, for compliance with requirements and other conditions affecting performance of the Work.

B. Examine enclosed controllers before installation. Reject enclosed controllers that are wet, moisture damaged, or mold damaged.

C. Proceed with installation only after unsatisfactory conditions have been corrected.

3.2 INSTALLATION

A. Wall-Mounted Controllers: Install enclosed controllers on walls with tops at uniform height unless otherwise indicated, and by bolting units to wall or mounting on lightweight structural-steel channels bolted to wall. For controllers not at walls, provide freestanding racks complying with Section 260529 "Hangers and Supports for Electrical Systems."

B. Install heaters in thermal overload relays. Select heaters based on actual nameplate full-load amperes after motors have been installed.

C. Comply with NECA 1, “Standard Practice for Good Workmanship in Electrical Construction.”

3.3 IDENTIFICATION

A. Identify enclosed controllers, components, and control wiring. Comply with requirements for identification specified in Section 260553 "Identification for Electrical Systems."

1. Identify field-installed conductors, interconnecting wiring, and components; provide warning signs.
2. Label each enclosure with engraved nameplate.

3.4 FIELD QUALITY CONTROL

A. Perform tests and inspections.

B. Acceptance Testing Preparation:

1. Test insulation resistance for each enclosed controller, component, connecting supply, feeder, and control circuit.
2. Test continuity of each circuit.

C. Tests and Inspections:

1. Inspect controllers, wiring, components, connections, and equipment installation.
2. Test insulation resistance for each enclosed-controller element, component, connecting motor supply, feeder, and control circuits.
3. Test continuity of each circuit.
4. Test each motor for proper phase rotation.
5. Perform each electrical test and visual and mechanical inspection stated in NETA Acceptance Testing Specification. Certify compliance with test parameters.
6. Correct malfunctioning units on-site, where possible, and retest to demonstrate compliance; otherwise, replace with new units and retest.
7. Test and adjust controls, remote monitoring, and safeties. Replace damaged and malfunctioning controls and equipment.

D. Enclosed controllers will be considered defective if they do not pass tests and inspections.

3.5 PROTECTION

A. Temporary Heating: Apply temporary heat to maintain temperature according to manufacturer's written instructions until enclosed controllers are ready to be energized and placed into service.

B. Replace controllers whose interiors have been exposed to water or other liquids prior to Substantial Completion.

END OF SECTION 262913

SECTION 26 2923 - VARIABLE-FREQUENCY MOTOR CONTROLLERS

PART 1 - GENERAL

1.1 RELATED DOCUMENTS

A. Drawings and general provisions of the Contract, including General and Supplementary Conditions and Division 01 Specification Sections, apply to this Section.

1.2 SUMMARY

A. Section includes separately enclosed, preassembled, combination VFCs, rated 600 V and less, for speed control of three-phase, squirrel-cage induction motors.

1.3 DEFINITIONS

A. BAS: Building automation system.

B. CPT: Control power transformer.

C. LED: Light-emitting diode.

D. NC: Normally closed.

E. NO: Normally open.

F. OCPD: Overcurrent protective device.

G. PID: Control action, proportional plus integral plus derivative.

H. VFC: Variable-frequency motor controller.

1.4 ACTION SUBMITTALS

A. Product Data: For each type and rating of VFC indicated.

1. Include dimensions and finishes for VFCs.
2. Include rated capacities, operating characteristics, electrical characteristics, and furnished specialties and accessories.

B. Shop Drawings: For each VFC indicated.

1. Include mounting and attachment details.
2. Include details of equipment assemblies. Indicate dimensions, weights, loads, required clearances, method of field assembly, components, and location and size of each field connection.
3. Include diagrams for power, signal, and control wiring.

1.5 INFORMATIONAL SUBMITTALS

A. Qualification Data: For testing agency.

B. Product Certificates: For each VFC from manufacturer.

C. Source quality-control reports.

D. Field quality-control reports.

1.6 CLOSEOUT SUBMITTALS

A. Operation and Maintenance Data: For VFCs to include in emergency, operation, and maintenance manuals.

1. In addition to items specified in Section 017823 "Operation and Maintenance Data," include the following:

a. Manufacturer's written instructions for testing and adjusting thermal-magnetic circuit breaker trip settings.
b. Manufacturer's written instructions for setting field-adjustable overload relays.
c. Manufacturer's written instructions for testing, adjusting, and reprogramming microprocessor control modules.
d. Manufacturer's written instructions for setting field-adjustable timers, controls, and status and alarm points.
e. Load-Current and List of Settings of Adjustable Overload Relays: Compile after motors have been installed, and arrange to demonstrate that switch settings for motor-running overload protection suit actual motors to be protected.

1.7 QUALITY ASSURANCE

A. Testing Agency Qualifications: Member company of NETA or an NRTL.

1.8 DELIVERY, STORAGE, AND HANDLING

A. If stored in space that is not permanently enclosed and air conditioned, remove loose packing and flammable materials from inside controllers and install temporary electric heating, with at least 250 W per controller.

1.9 WARRANTY

A. Special Warranty: Manufacturer agrees to repair or replace VFCs that fail in materials or workmanship within specified warranty period.

1. Warranty Period: Five years from date of Substantial Completion.

PART 2 - PRODUCTS

2.1 MANUFACTURERS

A. Manufacturers: Subject to compliance with requirements, provide products by one of the following :

1. ABB.
2. Danfoss Inc.
3. Eaton.
4. Toshiba International Corporation.
5. Schneider Electric USA, Inc.

2.2 SYSTEM DESCRIPTION

A. General Requirements for VFCs:

1. VFCs and Accessories: Listed and labeled as defined in NFPA 70, by a qualified testing agency, and marked for intended location and application.
2. Comply with NEMA ICS 7, NEMA ICS 61800-2, and UL 508C.

B. Application: Constant torque.

C. VFC Description: Variable-frequency motor controller, consisting of power converter that employs pulse-width-modulated inverter, factory built and tested in an enclosure, with integral disconnecting means and overcurrent and overload protection; listed and labeled by an NRTL as a complete unit; arranged to provide self-protection, protection, and variable-speed control of one or more three-phase induction motors by adjusting output voltage and frequency.

1. Units suitable for operation of NEMA MG 1, Design A and Design B motors, as defined by NEMA MG 1, Section IV, Part 30, "Application Considerations for Constant Speed Motors Used on a Sinusoidal Bus with Harmonic Content and General Purpose Motors Used with Adjustable-Voltage or Adjustable-Frequency Controls or Both."
2. Listed and labeled for integrated short-circuit current (withstand) rating by an NRTL acceptable to authorities having jurisdiction.

D. Design and Rating: Match load type, such as fans and type of connection used between motor and load such as direct or through a power-transmission connection.

E. Output Rating: Three phase; 10 to 60 Hz, with voltage proportional to frequency throughout voltage range; maximum voltage equals input voltage.

F. Unit Operating Requirements:

1. Input AC Voltage Tolerance: Plus 10 and minus 10 percent of VFC input voltage rating.
2. Input AC Voltage Unbalance: Not exceeding 5 percent.
3. Input Frequency Tolerance: Plus or minus 3 percent of VFC frequency rating.
4. Minimum Efficiency: 96 percent at 60 Hz, full load.
5. Minimum Displacement Primary-Side Power Factor: 96 percent under any load or speed condition.

6. Minimum Short-Circuit Current (Withstand) Rating: 22 kA.
7. Ambient Temperature Rating: Not less than 32 deg F (0 deg C) and not exceeding 104 deg F (40 deg C).
8. Humidity Rating: Less than 95 percent (noncondensing).
9. Altitude Rating: Not exceeding 3300 feet (1000 m).
10. Vibration Withstand: Comply with NEMA ICS 61800-2.
11. Overload Capability: 1.1 times the base load current for 60 seconds; minimum of 1.8 times the base load current for three seconds.
12. Starting Torque: Minimum 100 percent of rated torque from 3 to 60 Hz.
13. Speed Regulation: Plus or minus 5 percent.
14. Output Carrier Frequency: Selectable; 0.5 to 15 kHz.
15. Stop Modes: Programmable; includes fast, free-wheel, and dc injection braking.

G. Inverter Logic: Microprocessor based, 32 bit, isolated from all power circuits.

H. Isolated Control Interface: Allows VFCs to follow remote-control signal over a minimum 40:1 speed range.

1. Signal: Electrical.

I. Internal Adjustability Capabilities:

1. Minimum Speed: 5 to 25 percent of maximum rpm.
2. Maximum Speed: 80 to 100 percent of maximum rpm.
3. Acceleration: 0.1 to 999.9 seconds.
4. Deceleration: 0.1 to 999.9 seconds.
5. Current Limit: 30 to minimum of 150 percent of maximum rating.

J. Self-Protection and Reliability Features:

1. Surge Suppression: Factory installed as an integral part of the VFC, complying with UL 1449 SPD, Type 1 or Type 2.
2. Loss of Input Signal Protection: Selectable response strategy, including speed default to a percent of the most recent speed, a preset speed, or stop; with alarm.
3. Under- and overvoltage trips.
4. Inverter overcurrent trips.
5. VFC and Motor-Overload/Overtemperature Protection: Microprocessor-based thermal protection system for monitoring VFCs and motor thermal characteristics, and for providing VFC overtemperature and motor-overload alarm and trip; settings selectable via the keypad.
6. Critical frequency rejection, with three selectable, adjustable deadbands.
7. Instantaneous line-to-line and line-to-ground overcurrent trips.
8. Loss-of-phase protection.
9. Reverse-phase protection.
10. Short-circuit protection.
11. Motor-overtemperature fault.

K. Automatic Reset/Restart: Attempt three restarts after drive fault or on return of power after an interruption and before shutting down for manual reset or fault correction; adjustable delay time between restart attempts.

L. Power-Interruption Protection: To prevent motor from re-energizing after a power interruption until motor has stopped, unless "Bidirectional Autospeed Search" feature is available and engaged.

M. Bidirectional Autospeed Search: Capable of starting VFC into rotating loads spinning in either direction and returning motor to set speed in proper direction, without causing damage to drive, motor, or load.

N. Torque Boost: Automatically varies starting and continuous torque to at least 1.5 times the minimum torque to ensure high-starting torque and increased torque at slow speeds.

O. Motor Temperature Compensation at Slow Speeds: Adjustable current fall-back based on output frequency for temperature protection of self-cooled, fan-ventilated motors at slow speeds.

P. Integral Input Disconnecting Means and OCPD: UL 489, instantaneous-trip circuit breaker with pad-lockable, door-mounted handle mechanism.

1. Disconnect Rating: Not less than 115 percent of VFC input current rating.
2. Auxiliary contacts "a" and "b" arranged to activate with circuit-breaker handle.

2.3 CONTROLS AND INDICATION

A. Status Lights: Door-mounted LED indicators displaying the following conditions:

1. Power on.
2. Run.
3. Overvoltage.
4. Line fault.
5. Overcurrent.
6. External fault.

B. Panel-Mounted Operator Station: Manufacturer's standard front-accessible, sealed keypad and plain-English-language digital display; allows complete programming, program copying, operating, monitoring, and diagnostic capability.

1. Keypad: In addition to required programming and control keys, include keys for HAND, OFF, and AUTO modes.
2. Security Access: Provide electronic security access to controls through identification and password with at least three levels of access: View only; view and operate; and view, operate, and service.

a. Control Authority: Supports at least four conditions: Off, local manual control at VFC, local automatic control at VFC, and automatic control through a remote source.

C. Historical Logging Information and Displays:

1. Real-time clock with current time and date.
2. Running log of total power versus time.

3. Total run time.
4. Fault log, maintaining last four faults with time and date stamp for each.

D. Indicating Devices: Digital display mounted flush in VFC door and connected to display VFC parameters including, but not limited to:

1. Output frequency (Hz).
2. Motor speed (rpm).
3. Motor status (running, stop, fault).
4. Motor current (amperes).
5. Motor torque (percent).
6. Fault or alarming status (code).
7. PID feedback signal (percent).
8. DC-link voltage (V dc).
9. Set point frequency (Hz).
10. Motor output voltage (V ac).

E. Control Signal Interfaces:

1. Electric Input Signal Interface:

   a. A minimum of two programmable analog inputs: 0- to 10-V dc 4- to 20-mA dc.
   b. A minimum of six multifunction programmable digital inputs.

2. Pneumatic Input Signal Interface: 3 to 15 psig (20 to 104 kPa).
3. Remote Signal Inputs: Capability to accept any of the following speed-setting input signals from the BAS or other control systems:

   a. 0- to 10-V dc.
   b. 4- to 20-mA dc.
   c. Potentiometer using up/down digital inputs.
   d. Fixed frequencies using digital inputs.

4. Output Signal Interface: A minimum of one programmable analog output signal(s) (4- to 20-mA dc), which can be configured for any of the following:

   a. Output frequency (Hz).
   b. Output current (load).
   c. DC-link voltage (V dc).
   d. Motor torque (percent).
   e. Motor speed (rpm).
   f. Set point frequency (Hz).

5. Remote Indication Interface: A minimum of two programmable dry-circuit relay outputs (120-V ac, 1 A) for remote indication of the following:

   a. Motor running.
   b. Set point speed reached.
   c. Fault and warning indication (overtemperature or overcurrent).
   d. PID high- or low-speed limits reached.

F. BAS Interface: Factory-installed hardware and software shall interface with BAS to monitor, control, display, and record data for use in processing reports. VFC settings shall be retained within VFC's nonvolatile memory.

1. Hardwired Points:

a. Monitoring: On-off status.
b. Control: On-off operation.

2. Communication Interface: Comply with ASHRAE 135. Communication shall interface with BAS to remotely control and monitor the VFC from a BAS operator workstation. Control features and monitoring points displayed locally at VFC shall be available through the BAS.

2.4 LINE CONDITIONING AND FILTERING

A. Input Line Conditioning: Provide 5% input line impedance.

2.5 OPTIONAL FEATURES

A. Remote Indicating Circuit Terminals: Mode selection, controller status, and controller fault.

B. Remote digital operator kit.

C. Communication Port: RS-232 port, USB 2.0 port, or equivalent connection capable of connecting a printer.

2.6 ENCLOSURES

A. VFC Enclosures: NEMA 250, to comply with environmental conditions at installed location.

1. Dry and Clean Indoor Locations: Type 1.
2. Outdoor Locations: Type 3R, stainless steel.

2.7 ACCESSORIES

A. General Requirements for Control-Circuit and Pilot Devices: NEMA ICS 5; factory installed in VFC enclosure cover unless otherwise indicated.

1. Push Buttons: Unguarded.
2. Pilot Lights: Push to test.
3. Selector Switches: Rotary type.

B. Reversible NC/NO bypass contactor auxiliary contact(s).

C. Control Relays: Auxiliary and adjustable solid-state time-delay relays.

D. Phase-Failure, Phase-Reversal, and Undervoltage and Overvoltage Relays: Solid-state sensing circuit with isolated output contacts for hard-wired connections. Provide adjustable undervoltage, overvoltage, and time-delay settings.

1. Current Transformers: Continuous current rating, basic impulse insulating level (BIL) rating, burden, and accuracy class suitable for connected circuitry. Comply with IEEE C57.13.

E. Supplemental Digital Meters:

1. Elapsed-time meter.
2. Kilowatt meter.
3. Kilowatt-hour meter.

F. Space heaters, with NC auxiliary contacts, to mitigate condensation in NEMA 250, Type 3R enclosures installed outdoors or in unconditioned interior spaces subject to humidity and temperature swings. Space heater shall be powered from 480V feed to VFC.

2.8 SOURCE QUALITY CONTROL

A. Testing: Test and inspect VFCs according to requirements in NEMA ICS 61800-2.

1. Test each VFC while connected to its specified motor.
2. Verification of Performance: Rate VFCs according to operation of functions and features specified.

B. VFCs will be considered defective if they do not pass tests and inspections.

C. Prepare test and inspection reports.

PART 3 - EXECUTION

3.1 EXAMINATION

A. Examine areas, surfaces, and substrates to receive VFCs, with Installer present, for compliance with requirements for installation tolerances, and other conditions affecting performance of the Work.

B. Examine VFC before installation. Reject VFCs that are wet, moisture damaged, or mold damaged.

C. Examine roughing-in for conduit systems to verify actual locations of conduit connections before VFC installation.

D. Prepare written report, endorsed by Installer, listing conditions detrimental to performance of the Work

E. Proceed with installation only after unsatisfactory conditions have been corrected.

3.2 INSTALLATION

A. Wall-Mounting Controllers: Install with tops at uniform height and with disconnect operating handles not higher than 79 inches (2000 mm) above finished floor, unless otherwise indicated,

and by bolting units to wall or mounting on lightweight structural-steel channels bolted to wall. For controllers not on walls, provide freestanding racks complying with Section 260529 "Hangers and Supports for Electrical Systems."

B. Roof-Mounting Controllers: Install VFC on roofs with tops at uniform height and with disconnect operating handles not higher than 79 inches (2000 mm) above finished roof surface unless otherwise indicated, and by mounting on freestanding, lightweight, structural-steel channels bolted to curbs. Seal roof penetrations after raceways are installed.

C. Temporary Lifting Provisions: Remove temporary lifting eyes, channels, and brackets and temporary blocking of moving parts from enclosures and components.

D. Install heaters in thermal-overload relays. Select heaters based on actual nameplate full-load amperes after motors are installed.

E. Comply with NECA 1, “Standard Practice for Good Workmanship in Electrical Construction.”

3.3 CONDUIT CONNECTIONS

A. Install all conduits into bottom of VFC enclosure. Input conductors must be in separate conduit from output conductors.

3.4 IDENTIFICATION

A. Identify VFCs, components, and control wiring. Comply with requirements for identification specified in Section 260553 "Identification for Electrical Systems."

1. Identify field-installed conductors, interconnecting wiring, and components; provide warning signs.
2. Label each VFC with engraved nameplate.
3. Label each enclosure-mounted control and pilot device.

3.5 FIELD QUALITY CONTROL

A. Manufacturer's Field Service: Engage a factory-authorized service representative to test and inspect components, assemblies, and equipment installations, including connections.

B. Acceptance Testing Preparation:

1. Test insulation resistance for each VFC element, bus, component, connecting supply, feeder, and control circuit.
2. Test continuity of each circuit.

C. Tests and Inspections:

1. Inspect VFC, wiring, components, connections, and equipment installation. Test and adjust controllers, components, and equipment.
2. Test insulation resistance for each VFC element, component, connecting motor supply, feeder, and control circuits.
3. Test continuity of each circuit.

4. Verify that voltages at VFC locations are within 10 percent of motor nameplate rated voltages.
5. Test each motor for proper phase rotation.
6. Perform tests according to the Inspection and Test Procedures for Adjustable Speed Drives stated in NETA Acceptance Testing Specification. Certify compliance with test parameters.
7. Correct malfunctioning units on-site, where possible, and retest to demonstrate compliance; otherwise, replace with new units and retest.
8. Test and adjust controls, remote monitoring, and safeties. Replace damaged and malfunctioning controls and equipment.

D. VFCs will be considered defective if they do not pass tests and inspections.

E. Prepare test and inspection reports, including a certified report that identifies the VFC. Include notation of deficiencies detected, remedial action taken, and observations made after remedial action.

3.6 ADJUSTING

A. Program microprocessors for required operational sequences, status indications, alarms, event recording, and display features. Clear events memory after final acceptance testing and prior to Substantial Completion.

B. Set field-adjustable switches, auxiliary relays, time-delay relays, timers, and overload-relay pickup and trip ranges.

3.7 PROTECTION

A. Temporary Heating: Apply temporary heat to maintain temperature according to manufacturer's written instructions until controllers are ready to be energized and placed into service.

B. Replace VFCs whose interiors have been exposed to water or other liquids prior to Substantial Completion.

3.8 DEMONSTRATION

A. Train Owner's maintenance personnel to adjust, operate, reprogram, and maintain VFCs.

END OF SECTION 262923

SECTION 283111 - ADDRESSABLE FIRE ALARM SYSTEMS

PART 1 - GENERAL

1.1 RELATED DOCUMENTS:

A. The Contract Documents in their entirety, including the Drawings, Specifications/Project Manual, Construction Contract Clauses, and any other documents issued as part of the Contract, apply to this Section.

B. Related Sections:

1. General and Special conditions
2. Division 1: Submittals
3. Division 9: Painting
4. Division 23:
   a. Automatic Control Systems
   b. HVAC Fans
5. Division 26: Basic Electrical Requirements

1.2 SUMMARY

A. Scope: This work includes modification of the existing fire alarm system to accommodate a new smoke exhaust system in the animal areas of the Panda House at the National Zoological Park in Washington DC. The existing fire alarm system shall be modified to accommodate new ductwork associated with the new smoke exhaust system and to interface with the building automation system (BAS) to perform the intended smoke exhaust functions. The new design shall also provide a Firefighter's Smoke Exhaust Panel for manual control and override of automatic control for the mechanical exhaust system. The Smoke Exhaust Panel shall be provided in accordance with International Building Code (2018) Section 909.16. The system shall provide a complete fire detection and voice fire alarm system with smoke exhaust interface capabilities, as described herein and on the contract drawings. The system shall include all wiring, raceways, pull boxes, terminal cabinets, outlet and mounting boxes, relays and interface devices, interfaced equipment, and all other accessories and miscellaneous items required for a complete operating system even though each item is not specifically mentioned or described.

B. Existing Equipment: Existing fire alarm equipment shall be maintained fully operational until the new equipment has been tested and accepted by the Smithsonian Institution. As new equipment is installed, it shall be labeled "NOT IN SERVICE" until the new equipment is

accepted. Once the new system is installed, tested, and accepted by the Smithsonian, the labels on the new equipment shall be removed and the existing equipment shall be labeled "NOT IN SERVICE" until removed from the building. Just prior to demolition and construction activities (dust producing activities), dust covers should be installed over spot type smoke detectors and the duct detector for the air handling unit serving the area. The dust covers are to be removed at the end of the work day.

C. Equipment Removal: After acceptance of the new system by the Smithsonian, all existing equipment not connected to the new system shall be removed and all damaged surfaces shall be restored to finishes similar to surrounding walls/ceiling/floor. Smoke detectors shall remain covered during removal and while in storage. Operational equipment which was removed shall be carefully packaged, labeled, and turned over to the COTR. Other material, such as conduit and electrical boxes, shall be removed from the site and disposed of by the Contractor.

D. Repair/Service Replacement Parts: Repair services and replacement parts for the system shall be furnished under this contract after the date of final acceptance of work by the Smithsonian Institution. On-site service during the warranty period shall be provided within 24 hours after notification. All repairs shall be completed within 48 hours after notification.

E. Contractor is advised that the building is occupied by people and animals and the building must remain open and functional for their own safety. Contractor shall utilized extreme caution and follow strict requirements contained in the specifications when working in the animal holding areas. Contractor will be restricted to specified work areas and time periods as described in the phased work plans and specifications. Contractor will not be permitted free access to animal holding areas and must complete work in compliance with phased work plans.

F. Contractor is advised that the scope and goal of this project is to modify the fire alarm system to accommodate the new smoke exhaust system in the animal holding areas of the building in a means that prohibits any access to any component of the system by the animals housed in the building. To achieve this means, it may be necessary to install specific fire alarm system components outside of the prescriptive requirement of the installation standards or outside the approval limitations of a specific system component. It is understood that this will only occur when no other solution exists to achieve full fire alarm coverage in accordance with the prescriptive requirements of the installation standards and approval listings. However, where such a condition occurs, approval by the Smithsonian AHJ must first be obtained before proceeding with installation.

1.3 DEFINITIONS

A. COTR: Contracting Officer Technical Representative

B. FM: FM Global (Factory Mutual)

C. FPE: Fire Protection Engineer

D. Furnish: To supply the stated equipment or materials

E. Install: To set in position and connect or adjust for use

F. NFPA: National Fire Protection Association

G. NICET: National Institute for Certification in Engineering Technologies

H. OSHEM: Office of Safety Health and Environmental Management

I. Provide: To furnish and install the stated equipment or materials

J. UL: Underwriters Laboratories

K. Animal Holding Area: Panda Bear exhibits and dens

1.4 SYSTEM DESCRIPTION

A. The building fire alarm control panel is in the Mechanical Room located in the center of the building. The fire alarm system is a Siemens MXL fire detection and voice evacuation system. The existing smoke detectors (and associated wiring and conduit) in the animal holding areas shall be relocated as indicated on the drawings to accommodate the new ductwork. Existing duct smoke detectors (and associated wiring and conduit) in existing ductwork in the West Mechanical Room shall also be relocated as required to accommodate the new ductwork arrangement. The relocation of the all smoke detectors shall comply with NFPA 72 (2019).

B. An interface with the BAS shall be provided to perform the intended smoke exhaust function in the animal holding areas. The smoke exhaust system is dedicated to the animal holding areas. Each exhibit and den shall be considered a separate smoke zone. The fire alarm system shall initiate smoke exhaust system start and the BAS shall control fan and associated damper function. The fire alarm shall initiate the smoke exhaust mode through interfaces with the BAS system. The smoke exhaust sequence shall start upon activation of a smoke detector in the animal holding area or manual on switch provided at the smoke exhaust panel. Upon receipt of an alarm signal from an animal area smoke detector or manual on switch at the smoke exhaust panel, the fire alarm system shall send an output to the BAS to cause its functions to occur.

C. The firefighter's smoke exhaust panel shall provide control capability over the smoke exhaust system equipment within the animal holding areas. The panel shall provide status indicators for all smoke control equipment, annunciated by fan and zone and by pilot-lamp-type indicators as follows:

1. White Lamp: Indicates fans, dampers, and other operating equipment are in their normal status.

2. Red Lamp: Indicates fans, dampers, and other operating equipment are in their off or closed status.

3. Green Lamp: Indicates fans, dampers and other operating equipment are in their on or open status.

4. Amber Lamp: Indicates fans, dampers, and other operating equipment are in a fault status.

D. The firefighter's smoke exhaust panel shall a three position key switch for each smoke zone. The three position key switch shall control system as follows:

1. Auto Switch: Allows automatic control of the smoke exhaust system via the fire alarm control panel. Where the smoke exhaust panel is in the Auto position, the actual status of the device shall continue to be indicated by the status indicator lamp. When directed by an automatic signal to assume an emergency condition, the auto status indicator lamp shall become the emergency condition for that device within the smoke zone. In no case shall control actions require the smoke exhaust system to assume more than one configuration at any one time.

2. On Switch: Manual activation of the smoke exhaust system in the respective smoke zone. Once the on switch is issued from the smoke exhaust panel, no automatic control from the fire alarm control panel shall contradict the control action. The last control action as indicated by each key switch position shall prevail. In no case shall control actions require the smoke exhaust system to assume more than one configuration at any one time.

3. Off Switch: The smoke exhaust system is turned off manually in the smoke zone. Once the off switch is issued from the smoke exhaust panel, no automatic control from the fire alarm control panel shall contradict the control action. The last control action as indicated by each key switch position shall prevail. In no case shall control actions require the smoke exhaust system to assume more than one configuration at any one time.

When the BAS smoke exhaust supervision relay is in Normal State, all smoke exhaust and make up air fans, dampers and louvers are shut down. When the BAS receives the smoke exhaust signal via automatic or manual (key switch) means, the BAS smoke exhaust supervision relay shall switch to the "Smoke Exhaust State" after confirmation that all exhaust and make-up air fans, dampers, and louvers are in their required smoke exhaust positions.

E. The firefighter's smoke exhaust panel shall perform the following functions: 1) monitor smoke panel "on" switch, 2) monitor smoke exhaust panel "off" switch, 3) monitor smoke exhaust activation fault supervision.

F. The new fire alarm and smoke exhaust system shall comply with all aspects of the applicable documents listed herein. Refer to the mechanical drawings and specifications for additional requirements for the smoke exhaust system.

1.5 PERFORMANCE REQUIREMENTS

A. Comply with NFPA 72 and all contract documents and specification requirements.

B. Supervision

1. Class B initiating device circuits.

2. Class B signaling line circuits for each floor.

3. Class A signaling line circuits for the network.

4. Class B notification appliance circuits.

5. Provide electrical supervision of the circuits leading to interfacing modules for the monitoring of contact type initiation devices, the control of electrical devices, load control relays (controlling elevators and HVAC equipment), and each independent smoke detection systems.

C. Alarm Functions: The sequence of operation for all initiating devices shall remain the same with the following additional function for smoke detectors in animal holding areas: :

1. Activation of a smoke detector in an animal holding area exhibit or den shall activate the addressable relay associated with the respective smoke zone, which shall cause the BAS to activate the respective smoke exhaust sequence in the smoke zone. Only the first smoke detector to go into alarm condition shall activate the smoke exhaust system. Any activation of subsequent smoke detectors shall have no effect on the smoke exhaust mode.

D. Supervisory Functions: Existing supervisory functions in the building shall remain unchanged.

E. Trouble Functions: Existing trouble functions in the building shall remain unchanged.

1.6 SUBMITTALS

A. General: Refer to Section "SUBMITTALS" for basic information relating to submittal requirements. Submit 6 complete sets of submittals. Partial submittals will not be acceptable and will be returned without review. Before any work is commenced, the submittal must be approved by the OSHEM. Any work performed by the contractor prior to their approval will be at the contractor's own risk. If such work is contrary to applicable codes and contract documents, the contractor shall bear all costs including, but not limited to, demolition, reconstruction, and all costs and expenses associated with revising the fire alarm system to meet all applicable codes and contract document requirements.

B. System Description: Submit a detailed description of the control panel as it shall operate for this specific installation. General system descriptions from the catalog cuts and copies of the Systems Design Operation portion of this specification will not be acceptable.

C. Equipment: Include annotated catalog data showing manufacturer's name, model, voltage, and catalog numbers for all equipment and components of the following:

1. Fire alarm terminal cabinet

2. Firefighter's Smoke Exhaust Panel and all associated wiring, relays, and interface devices

3. Addressable Relays And Interface Modules

4. Wire

5. Boxes

6. Terminal strips

7. Conduit

8. Support

D. Shop Drawings: Provide 5 sets of working drawings and 1 set of reproducible mylar sepia on sheets not smaller than 24 inches by 36 inches. Shop drawings shall be prepared on a computer Aided Drafting (CAD) System. As a minimum, the shop drawing submittal shall include the following:

1. Interior wiring diagram for FACP, Fire Alarm Terminal Cabinet and Smoke Exhaust Panel.

2. Provide point-to-point wiring diagrams on floor plans at a scale of not less than 1/8" = 1'-0", showing all field devices added, removed, or relocated (indicating and initiating devices, relays, switches, etc), field interconnections, the routing of conduit and circuits between devices, electrical boxes, terminal cabinets, risers, and the FACP/Fire Alarm Terminal Cabinet/Smoke Exhaust Panel. All device circuit numbers and addresses shall be indicated.

3. Field wiring color code scheme.

4. Locations for all ceiling mounted equipment shall be coordinated with lighting fixtures, air outlets, ductwork and other fixtures. All detectors shall be centered and aligned with ceiling tiles and/or other ceiling mounted devices.

5. Provide complete riser diagrams indicating the wiring sequence of all devices and their connections to the control equipment. Provide a color code schedule for the wiring. Provide floor plans showing the location of all devices and equipment.

6. Provide detailed drawings of the smoke exhaust panel.

7. Detailed sequence of operations and matrix.

E. As-Built (Record) Working Drawings: On a daily basis the contractor's superintendent shall record as-built conditions on a set of Shop Drawings maintained at the job site. Two sets of Shop Drawings reflecting as-built conditions shall be available prior to and for use in the final acceptance test. Two weeks after the acceptance test and before final acceptance of the work, furnish four complete sets of as-built drawings. The drawings shall be prepared on uniform sized sheets not less than 24 inches by 36 inches. The drawings shall include:

1. As-built location of all devices and equipment. Device addresses shall be listed next to each device

2. Complete wiring diagrams showing connections between all devices and equipment. Each conductor shall be numbered at every junction point with indication of origination and termination points.

3. Riser diagram

4. All deviations from the project drawings and approved shop drawings

F. Record Drawing Software: Provide three (3) compact discs containing CAD based drawings in DXF format of all as-built drawings and schematics.

G. Device Addresses: Prior to fire system installation provide for approval a complete list of device addresses with corresponding commands, controls, and sequence of operation.

H. Qualification Data: For Designer and Installer.

I. Descriptions on Smoke Exhaust Panel: Prior to fire system installation, provide descriptive labels for smoke exhaust panel labeling which will include smoke zones.

J. Service Manuals and Equipment Descriptions : Thirty days prior to the final acceptance test and after the preliminary testing has been completed submit the following:

1. Furnish four (4) bound copies of complete service manuals to include: device and board specifications, operation, installation, and maintenance manual; manufacturers installation instructions for all aspects of the installation; Walktest Operating Instructions; manufacturer's wiring specifications for the system; training manual.

2. Maintenance checklists for equipment.

3. As-built circuit diagrams, complete with color-code scheme, and device descriptions.

4. Complete parts list by make model number and manufacturer.

5. List of smoke detector addresses and corresponding sensitivity readings.

6. Copies of approved submittal materials.

K. Calculations: Submit substantiating battery calculations for supervisory and alarm power requirements based on system modifications. Ampere-hour requirements for each system component and each panel component shall be submitted with the calculations. Calculations shall include:

1. Battery capacity calculations.

2. Supervisory power requirements for all equipment.

3. Alarm power requirements for all equipment.

4. Power supply rating justification showing power requirements for each of the system power supplies.

5. Voltage drop calculations for NAC wiring runs demonstrating worst-case condition. Show capability of 25 or 70.7 vrms circuits for wire runs.

6. Provide complete battery calculations for both the alarm and supervisory power requirements. Ampere hour requirements for each system component shall be submitted with the calculations.

L. FACP Wire Chart: Prepare a system wire chart. Chart every wire showing the wire number, color, size, type of circuit, designation, origination point and termination point. The chart shall be typewritten with minimum 12 point lettering on paper that is 8.5 inches by 11 inches. The format of the wire chart shall be as shown on the contract drawings. Provide one copy of the wire chart in a sealed plastic envelop inside the fire alarm control panel.

M. Terminal Cabinet Wire Chart: Prepare a wire chart of the wires in each terminal cabinet. Chart every wire showing the wire number, color, size, type of circuit, designation, origination point and termination point. The chart shall be typewritten with minimum 12 point lettering. The format of the wire chart shall be as shown on the contract drawings. The chart must be protected with a clear laminate and mounted in each cabinet so that it does not interfere with the wiring or terminals.

N. Smoke Exhaust Panel Wire Chart: Prepare a wire chart of the wires in the smoke exhaust panel. Chart every wire showing the wire number, color, size, type of circuit, designation, origination point and termination point. The chart shall be typewritten with minimum 12 point lettering. The format of the wire chart shall be as shown on the contract drawings. The chart must be protected with a clear laminate and mounted in each cabinet so that it does not interfere with the wiring or terminals.

O. Work Schedule: All work must be coordinated with facility operations. Zoo operations may require limited access to areas, arranging for Zoo personnel to accompany contractors in non-public areas, and working during off-hours. Prior to initial work, meet with Zoo staff to establish a work schedule. A work schedule must be submitted for approval prior to initial work.

P. Certificate of Compliance: Within two weeks after passing the acceptance test submit a certificate of code and contract compliance to the COTR in accordance with NFPA 72 Section 10.18.2.1.1.

1.7 QUALITY ASSURANCE

A. Manufacturer Qualifications

1. Testing Services or Laboratories: Construct all fire alarm, fire detection, and smoke exhaust system equipment in accordance with the latest edition of the following publications from Underwriters Laboratories (UL) and Factory Mutual Engineering Corporation (FM):

a. UL Fire Protection Equipment Directory

b. UL Electrical Construction Materials Directory

c. UL 268 - Smoke Detectors for Fire Protective Signaling Systems

d. UL 268A - Smoke Detectors for Duct Application

e. UL 497A – Secondary Protectors for Communications Circuits

f. UL 864 - Control Units for Fire Protective Signaling Systems

g. UL 1283 – Electromagnetic Interference Filters

h. UL 1449 - Transient Voltage Surge Suppressors

i. FM Approval Guide

2. The design shall comply with the following codes and standards:

a. International Building Code, 2012 Edition

b. Life Safety Code, 2012 Edition

c. NFPA 70, National Electrical Code, 2008 Edition

d. NFPA 72, National Fire Alarm Code, 2010 Edition

e. NFPA 13, Standard for the Installation of Sprinklers, 2010 Edition

f. Americans with Disabilities Act Accessibility Guidelines for Buildings and Facilities (ADAAG).

B. Qualifications of Installer: Design shall be by a NICET Level III or IV Technician or a Registered Fire Protection Engineer. Installer shall have an office, which has been in existence for at least 3 years, within a 75 mile radius of the U.S. Capitol. Installation shall be accomplished by an electrical contractor with a minimum of five years experience in the installation of fire alarm systems of similar size and capacity. The services of a technician provided by the control equipment manufacturer shall be provided to supervise installation, adjustments, and tests of the system.

C. Distributor/ Service Organization/ Designer Qualifications: Design Personnel certified by NICET as Fire Alarm Level III or IV. The manufacturer's equipment distributor shall show evidence of certification by the manufacturer in the technical support of the system installed under this contract.

1. The distributor shall show evidence of certification of at least one employee by the National Institute for Certification in Engineering Technologies (NICET) at Level III or IV in the Fire Alarm Systems subfield of Fire Protection Engineering Technology. If such a certified individual is not employed, adequate documentation shall be provided to show comparable training and experience of an existing employee. At a

minimum, comparable training and experience shall consist of ten years of progressive experience in the installation and design of fire alarm systems of similar size and complexity to that specified herein.

2. In lieu of an employee with NICET Level III or IV certification, the distributor shall show evidence of at least one employee with a minimum of ten years of progressive experience in the design of fire alarm systems and, in addition, the distributor shall show evidence of technical support in the design, installation, and testing of the systems from a manufacturer-affiliated company, which shall show evidence of certification of at least one employee by the National Institute for Certification in Engineering Technologies (NICET) at level III or IV in the Fire Alarm Systems subfield of Fire Protection Engineering Technology.

3. The contractor shall furnish evidence that the fire alarm equipment supplier has an experienced and effective service organization, which carries a stock of repair parts for the system being furnished. Should the Contractor fail to comply with the service requirements of this section, the Smithsonian will then have the option to make the necessary repairs and back-charge contractor without any loss of warranty as provided by the contract documents.

D. Electrical Components, Devices, and Accessories: Listed and labeled as defined in NFPA 70, Article 100, by a testing agency acceptable to authorities having jurisdiction, and marked for intended use.

1.8 DELIVERY STORAGE AND HANDLING

A. Deliver products to project site in original, unopened packages with intact and legible manufacturers' labels identifying product and manufacturer, date of manufacture, and shelf life if applicable.

B. Store materials inside, under cover, above ground, and kept dry and protected from physical damage until ready for use. Remove from site and discard wet or damaged materials.

1.9 PROJECT CONDITIONS

A. Interruption of Existing Fire Alarm Service: Do not interrupt fire alarm service to facilities occupied by The Smithsonian Institution or others unless permitted under the following conditions and then only after arranging to provide temporary guard service according to requirements indicated:

1. Notify COTR no fewer than two days in advance of proposed interruption of fire alarm service.

2. Do not proceed with interruption of fire alarm service without The Smithsonian Institution's written permission.

1.10 COORDINATION

A. Coordinate fire alarm device layout with reflected ceiling plan and all ceiling – mounted equipment, including diffusers, lights, security cameras, fire alarm devices, exit signs, and other devices.

B. Coordinate fire alarm layouts with other trades to avoid obstructions and excessive changes in direction for conduit routing.

1.11 WARRANTY

A. The contractor shall guarantee labor, materials, and equipment provided under this contract against defects for a period of one year after the date of final acceptance of this work by the Smithsonian and after the receipt of as-built drawings and schematics of all equipment.

1.12 EXTRA MATERIALS

A. Spare parts shall be directly interchangeable with the corresponding components of the installed system. Spare parts shall be suitably packaged and identified by nameplate, stamping or tagging.

B. Furnish the following spare parts. Quantity shall be two percent of the installed number of devices, but not less than the quantities listed:

1. Fuses for each fused circuit: 5

2. Lamps for each lamp type furnished: 5

3. Keys shall be provided for all smoke exhaust panel and terminal cabinets: 5

1.13 IMPAIRMENT PROCEDURES

A. Whenever fire alarm systems are impaired, the specific impairment procedures in Chapter 36 of the SI OSHEM Safety Manual shall be followed. Only SI Staff shall be authorized to impair any fire alarm system and an impairment fire watch in accordance with the SI OSHEM Safety Manual Chapter 36 Attachment 2 shall be provided by the Contractor.

PART 2 - PRODUCTS

2.1 MANUFACTURERS

A. Available Manufacturers: Subject to compliance with requirements, manufacturers offering products that may be incorporated into the Work include, but are not limited to, the following:

1. Fire alarm terminal cabinet and peripheral devices: Must be compatible with the existing Siemens MXL fire alarm control panel.

2. Wire and Cable:

   a. Comtran Corporation.

   b. Helix/HiTemp Cables, Inc.; a Draka USA Company.

   c. Rockbestos-Suprenant Cable Corporation; a Marmon Group Company.

   d. West Penn Wire/CDT; a division of Cable Design Technologies.

   e. Approved equal.

3. Conduit:

   a. Allied

   b. Approved equal

4. Boxes, supports, terminal blocks, and appurtenances:

   a. As per Section Division 26

2.2 FIRE ALARM CONTROL PANEL (FACP)

A. The existing building FACP shall be remain. No additional fire alarm control panels are anticipated.

2.3 FIREFIGHTER'S SMOKE EXHAUST PANEL

A. The smoke exhaust panel shall provide graphics depicting the facility protected. The building graphical layout shall clearly indicate location and boundaries of smoke zones with respect to adjacent areas. The graphic should be shown in section view.

B. The smoke exhaust panel shall depict the location of the smoke exhaust equipment including the exhaust fans, make up air fans, and make up air louvers. Labels must be provided for each fan and louver. Clearly indicate the direction of airflow from each smoke zone to the fan unit protecting that zone.

C. Panel shall include a title block indicating the facility name and the title "Firefighter Smoke Exhaust Panel." Label each smoke zone area on the graphic display (e.g., Exhibit #1 Smoke Zone, Den #1 Smoke Zone).

D. The smoke exhaust panel shall include a three position key switch for each smoke zone. Switches shall be located on the panel reasonably close to the graphical depiction of the associated smoke zone. The three position key switch shall control system as follows:

1. Auto Switch: Allows automatic control of the smoke exhaust system via the fire alarm control panel. Where the smoke exhaust panel is in the Auto position, the actual status of the device shall continue to be indicated by the status indicator lamp.

2. On Switch: Manual activation of the smoke exhaust system in the respective smoke zone. Once the on switch is issued from the smoke exhaust panel, no automatic control from the fire alarm control panel shall contradict the control action.

3. Off Switch: The smoke exhaust system is turned off manually in the smoke zone. Once the off switch is issued from the smoke exhaust panel, no automatic control from the fire alarm control panel shall contradict the control action.

E. The smoke exhaust panel shall include status indicators for all smoke control equipment, annunciated by fan and zone and by pilot-lamp-type indicators as follows:

1. White Lamp: Indicates fans, dampers, and other operating equipment are in their normal status.

2. Red Lamp: Indicates fans, dampers, and other operating equipment are in their off or closed status.

3. Green Lamp: Indicates fans, dampers and other operating equipment are in their on or open status.

4. Amber Lamp: Indicates fans, dampers, and other operating equipment are in a fault status.

F. Panel shall include a legend for all symbols, including fans, louvers, and air flow directional arrows.

G. Panel enclosures shall consist of #16 gauge steel with a black textured finish. Hinges shall be concealed stainless steel located on the left side. Minimum size is 24 inches by 24 inches to be able to accommodate all addressable interface devices and relays required for intended smoke exhaust functions.

H. Panel shall be UL 864 UUKL listed.

I. Panel shall be point back-lighted and use socket-mounted “super bright” LEDs to facilitate any future changes. LEDs shall be available in four colors: white, red, amber and green. Incandescent lights are not acceptable.

J. All graphic information is to be white and factory-applied to a smoke Plexiglas face at the time of manufacture. The panel face shall be protected by clear Plexiglas enclosed by an architectural-gray extruded aluminum frame.

K. All electronics shall be factory mounted to a metal backplate that will be mounted to the backbox(es) at the time of final annunciator installation. All field connections to the backplate shall be made through the system-standard terminal strips. All front panel LEDs shall be connected to the backplate by quick-disconnected ribbon cables. All front panel switches shall use supervised, quick-plug-in circuit board connectors.

L. Each GANN shall have a lamp test push-button switch that when depressed, activates all LEDs.

M. Label all relays and interface devices with their respective function and respective zone that they serve.

2.4 FIRE ALARM TERMINAL CABINET

A. Terminal cabinet shall house 16 addressable relays for smoke exhaust as follows:

1. Den #1 Smoke Exhaust Activation
2. Exhibit #1 Smoke Exhaust Activation
3. Den #2 Smoke Exhaust Activation
4. Exhibit #2 Smoke Exhaust Activation
5. Den #3 Smoke Exhaust Activation
6. Exhibit #3 Smoke Exhaust Activation
7. Den #4 Smoke Exhaust Activation
8. Exhibit #4 Smoke Exhaust Activation
9. Den #1 Smoke Exhaust OFF
10. Exhibit #1 Smoke Exhaust OFF
11. Den #2 Smoke Exhaust OFF
12. Exhibit #2 Smoke Exhaust OFF
13. Den #3 Smoke Exhaust OFF
14. Exhibit #3 Smoke Exhaust OFF
15. Den #4 Smoke Exhaust OFF
16. Exhibit #4 Smoke Exhaust OFF

B. Contractor shall connect to these relays to the fire alarm control panel.

C. Addressable relays shall be mounted in back of panel in rows with adjacent terminal strips. All wiring shall be landed on terminal strips.

D. Terminal Cabinets used in this system shall be steel cabinets with locking, hinge-mounted door. Minimum size shall be 18 inches x 12 inches x 4 inches.

E. Provide box fill in accordance with NEC Article 314. Calculate the volume of each conductor, whether in a cable or singly, per Table 314.16(B).

F. Label all relays with their respective function and respective zone that they serve.

2.5 GRAPHIC ANNUNCIATOR

A. Work to existing graphic annunciator panels in the building is not anticipated.

2.6 REMOTE MONITORING SYSTEM

A. Communication between building FACP and remote monitoring station shall remain as existing. No change in the sequence of signal transmission is anticipated.

2.7 ADDRESSABLE INTERFACE MODULES

A. Furnish intelligent analog signaling circuit interface modules for the monitoring of contact type initiation devices. The modules shall be capable of monitoring three separate functions: alarm, trouble and supervisory conditions.

B. The module shall be addressed, tested and programmed prior to installation using a U.L. listed programmer/ tester.

C. The module shall display a steady LED for each circuit, in the normal power or standby power condition, when in the alarm state or during control circuit is activation.

2.8 ADDRESSABLE RELAY MODULES

A. Furnish intelligent analog signaling line circuit relay modules for controlling the smoke exhaust systems. The addressable relay module shall provide interfacing with equipment for control function.

B. Addressable relay modules shall be located within 3 feet of the controllers for those systems as indicated on drawings.

PART 3 - EXECUTION

3.1 SYSTEM FIELD WIRING AND CONDUIT

A. Wiring within Cabinets and Junction Boxes: Provide wiring installed in a neat and workmanlike manner and installed parallel with or at right angles to the sides and back of any box or cabinet.

B. Conductor Type and Size: Wire size shall be sufficient to prevent voltage drop problems. Wire type and sizing of conductors shall be in accordance with the manufacturers wiring specifications for the system, except for minimum wire size shall be as follows:

1. Signaling Line Circuits: 16AWG, Type FPLR, solid copper, shielded

2. 120VAC Circuits: 12AWG, Type THHN, solid copper

3. Interfaced Circuits: 16AWG, Type FPLR, solid copper, shielded

4. Battery Cable: 14 AWG, stranded

C. Connectors: All conductors shall be terminated at a screwed connector on a securely mounted approved pressure type terminal block. The use of wire nuts or similar devices shall be prohibited.

D. Terminal Cabinets: Provide a terminal cabinet at the base of any circuit riser, on each floor at each riser, and where indicated on the drawings. Cabinet size shall be appropriate for the size of the wiring to be connected.

E. Conductor Numbering: All conductors installed in the system shall be numbered at every junction point. Use a numbered shrink-wrap label designed specifically for this purpose. Wire numbers shall be the same as those designated on the as-built drawings. Mark each terminal in accordance with the wiring chart and diagrams of the system.

F. Conductor Color Coding: Color coded conductors shall be consistent for each type of circuit. When renovating or adding to an existing system, color coding shall match the existing system.

G. Signaling Line and Notification Appliance Circuits

1. Signaling Line, notification appliance, and power circuits shall each be in separate conduit.

2. Strobes are to be connected to circuits separate from speakers. This includes strobes and speakers that are mounted as a unit.

3. Provisions for tying-in signaling line and notification appliance circuits directly to the FACP mother board (board containing CPU) shall not be used. Initiation and indicating circuits shall be tied to a separate electronic board before connection to the mother board.

H. Circuit Loading:

1. Spare capacity shall be in accordance with 2.08 and 2.09.

2. Circuits operating at 24VDC shall not operate at less than 21.6volts. Circuits operating at any other voltage shall not have a voltage drop exceeding 10% of nominal voltage.

I. Spare Circuits: Provide one spare signaling line and notification appliance circuit for each terminal box placed at each floor on each riser. Spare capacity shall also be provided in the FACP for these circuits. FACP control boards shall be provided to permit 2 spare initiation circuits and 2 spare indicating circuits. Spare circuits are not to include those provided on the mother board.

J. Conduit:

1. All conductors shall be in grounded metal conduit. Conduit shall be Rigid metal or EMT. Flexible metal conduit not exceeding six foot lengths shall be permitted from junction box to initiating device. On flexible metal conduit, use only insulated throat connectors.

2. Run conduit or tubing concealed unless specifically shown otherwise on the drawings.

3. Minimum conduit size shall be 3/4-inch.

K. Circuits to Interfaced Equipment:

1. Circuits to smoke exhaust systems shall terminate in terminal cabinets within 3 feet of the controllers for those systems. The completion of those circuits from the terminal cabinets to the appropriate system shall be provided under the appropriate division specification.

3.2 MARKING

A. All metal surfaces shall be painted. Metal conduit in finished areas shall be painted the color to match adjacent surfaces. Junction boxes in unfinished areas shall be painted a full gloss enamel red. Painting shall be in accordance with Section 099000.

B. Red bands shall be applied every 310 feet when not using red-colored conduit.

C. Prior to acceptance testing each fire alarm initiating device must be labeled with the device address.

3.3 DEVICE INSTALLATION:

A. Smoke Exhaust Panel: The maximum height of any portion of the panel shall be 7 feet above finished floor and the minimum height of any portion of the panel shall be 2 feet 6 inches from the floor. Panel enclosure shall be a surface mount backbox.

B. Smoke Detectors:

1. Install detectors not closer than 36 inches from air-supply diffuser or return-air opening.

3.4 TESTS

A. Megger Tests: After all wiring has been installed, and prior to making any connections to panels or devices, all wiring shall be megger tested for insulation resistance, grounds, and/or shorts. Conductors with 300 volt rated insulation shall be tested at a minimum of 250 VDC. Conductors with 600 volt rated insulation shall be tested at a minimum of 500 VDC. The tests shall be witnessed by OSHEM and the Contracting Officer and test results recorded for use at the final acceptance test.

B. Loop Resistance Tests: Measure and record the resistance of each circuit with each pair of conductors in the circuit short-circuited at the farthest point from the circuit origin. The tests shall be witnessed by the Contracting Officer and OSHEM and test results recorded for use at the final acceptance test.

C. Preliminary Testing: Conduct preliminary tests to ensure that all devices and circuits are functioning properly. After preliminary testing is complete, provide a letter certifying that the installation is complete and fully operable. The letter shall state that each initiating and indicating device was tested in place and functioned properly. The letter shall also state that all panel functions were tested and operated properly. The Contractor and an authorized representative from each supplier of equipment shall be in attendance at the preliminary testing to make necessary adjustments.

D. Final Acceptance Test: Notify the Contracting Officer in writing when the system is ready for final acceptance testing. Submit request for test at least 14 calendar days prior to the test date. A final acceptance test will not be scheduled until meggar test results, the loop resistance test results, and the submittals required in Part 1 are provided to the Contracting Officer. Test the system in accordance with the procedures outlined in NFPA 72. The required tests are as follows:

1. Verify the absence of unwanted voltages between circuit conductors and ground.

2. Verify that the control unit is in the normal condition as detailed in the manufacturer's operating and maintenance manual.

3. Complete operational tests under emergency generator power

4. Complete operational tests under battery power and as described above under battery power. Test the battery charger.

5. Test each initiating and indicating device and circuit for proper operation and response. Disconnect the confirmation feature for smoke detectors during tests to minimize the amount of smoke or test gas needed to activate the detector.

6. Test the system for all specified functions in accordance with the contract drawings and specifications and the manufacturer's operating and maintenance manual.

7. Visually inspect all wiring.

8. Verify that all software control and data files have been entered or programmed into the FACP.

9. Verify that Shop Drawings reflecting as-built conditions are accurate.

10. Measure the current in circuits to assure that there is the calculated spare capacity for the circuits.

11. Measure voltage readings for circuits to assure that voltage drop is not excessive.

12. Measure the voltage drop at the most remote appliance on each notification appliance circuit.

E. Test Equipment: The contractor shall supply personnel, communication devices, and all equipment necessary for performance of the final test.

3.5 TRAINING

A. Instructor: Include in the project the services of an instructor, who shall have received specific training from the manufacturer for the training of other persons regarding the inspection, testing and maintenance of the system provided. The instructor shall train the Smithsonian employees designated by the Contracting Officer, in the care, adjustment, maintenance, and operation of the fire alarm system.

B. Training sessions shall cover all aspects of system performance, including system architecture, signaling line circuit configurations, sensor and other initiating device types, locations, and addresses, fire alarm control panel function key operation, and other functions as designated by the COTR.

C. Required Instruction Time: Provide 16 hours of instruction after final acceptance of the system. The instruction shall be given during regular working hours on such dates and times as are selected by the Contracting Officer. The instruction may be divided into two or more periods at the discretion of the Contracting Officer. One training session shall be videotaped by the contractor. Videotapes shall be delivered to the COTR.

D. Provide a typeset printed or typewritten instruction card mounted behind a Lexan plastic or glass cover in a stainless steel or aluminum frame. Install the frame in a conspicuous location observable from the FACP. The card shall show those steps to be taken by an operator when a signal is received as well as the functional operation of the system under all conditions, normal, alarm, supervisory and trouble. The instructions shall be approved by the COTR.

E. Comprehensive system troubleshooting training shall be provided for a single individual designated by the COTR. This session shall be separate and distinct from the above described sessions.

F. All training sessions shall be conducted following final system certification and acceptance. Three additional training sessions shall be provided for all security personnel on all shifts six months after final system certification.

G. All training sessions shall be conducted by an authorized fire alarm system distributor representative, who has received specific training from the manufacturer for the training of other persons regarding the inspection, testing, and maintenance of the system provided.

3.6 KEYS

A. Keys and locks for all equipment shall be identical where possible. Provide not less than six keys of each type required. Identify keys by an appropriate number stamped on each key or on a metal tag attached thereto. Provide a key numbering chart in each operation and maintenance manual furnished.

END OF SECTION 283111

CUT SHEETS

SUBMITTAL

Job Name: SI Panda House

Tag: MAF-1/2
Customer: Mueller Associates, Inc.
Job ID: 071720
Date: October 13, 2020

WPB - Propeller Wall Fan, Light and Medium Duty, Belt Driven

Construction Features

- Fabricated steel or cast aluminum propellers.
- Steel panel with deep formed inlet venturi which distributes air velocity uniformly.
- Pre-Punched mounting holes.
- Motor supports are constructed of heavy-gauge galvanized steel.
- Fans designed for supply service are provided with motor and drive located on the building interior side of the fan.

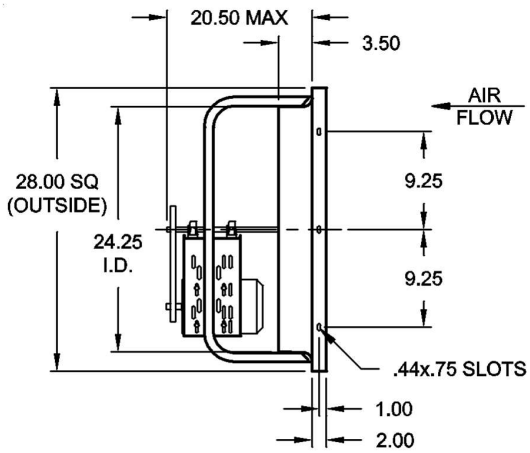

DAMPER SIZE	25.00 X 25.00

D4820-4 WPB 24L3

Description	Qty	Model	Size	Angle	Wt (lb.)
	2	WPB	24E4	25°	189

Approximate weight each, includes fan, motor and accessories.

Configuration	Class	Rotation	Arr	Disch	M. Pos	Disch Dir
	N/A	N/A	9	S	--	Irrelevant

Performance	CFM	SP (in WC)	RPM	Oper. BHP
	3,150	0.300	1,005	0.28

Temperature: 70 °F Altitude: 0 ft

Department of Energy	FEI	FEP (KW)	System FEI	System FEP (KW)
	1.96	0.30	N/A	N/A

Note that the Fan Energy Index (FEI) is an overall efficiency (wire-to-air) metric which includes not only the impact of the fan efficiency, but also each of the drive components used to operate the fan. The Fan Electrical Input Power (FEP) is the amount of power of a given fan at an operating point characterized by a value of flow and pressure.

Motor Data	HP	RPM	Volt/Ph/Hz	Enclosure
	1/2	1,750	115V/1/60	ODP

Efficiency: Standard

Sound Data	Octave Bands	1	2	3	4	5	6	7	8	LwA	dBA	Sones
	Level at Inlet	87	82	79	76	73	70	64	58	79	64	15.6

LwA: The overall (single value) fan sound power level in dB re. 10^{-12} Watts, 'A' weighted.
dBA: Estimated sound pressure level (re:0.0002 microbar) based on a single ducted installation at 5 ft., using a directivity factor of 1.

Accessories Included

Wall Box w/ Bolted Guard, Factory Assembled
Extended Lube Lines - Polyethylene
Supply Fan Adder
Variable Speed V-Belt Drive, 1.5 SF

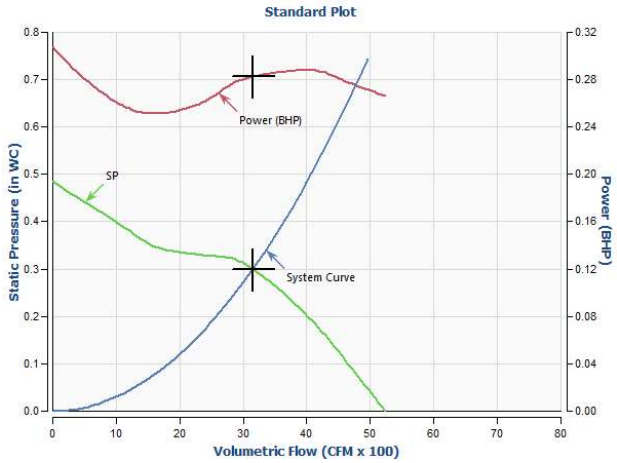

Tag: MAF-1/2
Customer: Mueller Associates, Inc.
Job ID: 071720
Date: October 13, 2020

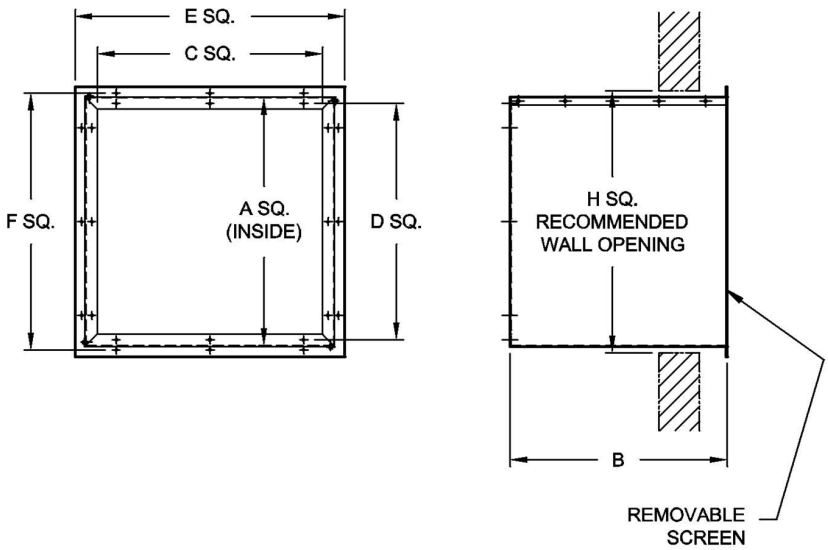

TYPICAL MOUNTING INSTALLATION

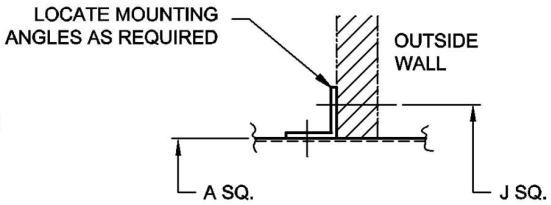

SIZE	A SQ.	B	C SQ.	D SQ.	E SQ.	F SQ.	MAT'L GAGE	H SQ.	J SQ.
14	17.25	33.50	14.63	15.75	19.75	18.13	18	18.00	19.38
16	20.25	34.00	17.63	18.75	22.75	21.13	18	21.00	22.38
18	22.25	34.00	19.63	20.75	24.75	23.13	18	23.00	24.38
21	25.25	36.00	22.63	23.75	27.75	26.13	18	26.00	27.38
24	28.25	37.00	25.63	26.75	30.75	29.13	18	29.00	30.38
30	36.25	40.00	33.63	34.75	38.75	37.13	16	37.00	38.38
36	42.25	40.00	39.63	40.75	44.75	43.13	16	43.00	44.38
42	48.25	43.00	45.63	46.75	50.75	49.13	16	49.00	50.38
48	54.25	43.00	51.63	52.75	56.75	55.13	16	55.00	56.38
54	60.25	49.00	57.63	58.75	62.75	61.13	16	61.00	62.38
60	66.25	50.00	63.63	64.75	68.75	67.13	16	67.00	68.38

D4820-6A 018-4104

SUBMITTAL

Job Name: SI Panda House

Tag: MAF-3/4
Customer: Mueller Associates, Inc.
Job ID: 071720
Date: October 13, 2020

WPB - Propeller Wall Fan, Light and Medium Duty, Belt Driven

Construction Features

- Fabricated steel or cast aluminum propellers.
- Steel panel with deep formed inlet venturi which distributes air velocity uniformly.
- Pre-Punched mounting holes.
- Motor supports are constructed of heavy-gauge galvanized steel.
- Fans designed for supply service are provided with motor and drive located on the building interior side of the fan.

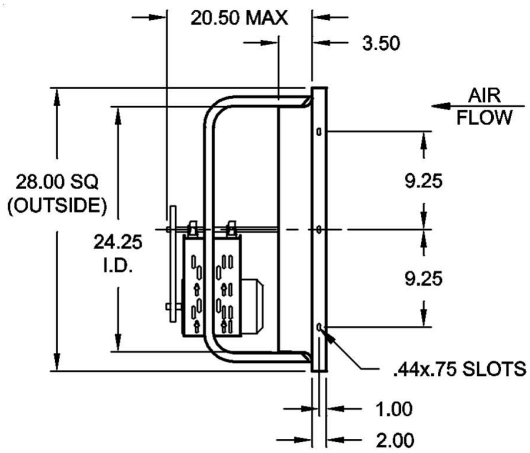

DAMPER SIZE	25.00 X 25.00

D4820-4 WPB 24L3

Description	Qty	Model	Size	Angle	Wt (lb.)
	2	WPB	24E4	25°	219

Approximate weight each, includes fan, motor and accessories.

Configuration	Class	Rotation	Arr	Disch	M. Pos	Disch Dir
	N/A	N/A	9	S	--	Irrelevant

Performance	CFM	SP (in WC)	RPM	Oper. BHP
	3,150	0.300	1,005	0.28

Temperature: 70 °F Altitude: 0 ft

Department of Energy	FEI	FEP (KW)	System FEI	System FEP (KW)
	1.96	0.30	N/A	N/A

Note that the Fan Energy Index (FEI) is an overall efficiency (wire-to-air) metric which includes not only the impact of the fan efficiency, but also each of the drive components used to operate the fan. The Fan Electrical Input Power (FEP) is the amount of power of a given fan at an operating point characterized by a value of flow and pressure.

Motor Data	HP	RPM	Volt/Ph/Hz	Enclosure
	1/2	1,750	115V/1/60	ODP

Efficiency: Standard

Sound Data	Octave Bands	1	2	3	4	5	6	7	8	LwA	dBA	Sones
	Level at Inlet	87	82	79	76	73	70	64	58	79	64	15.6

LwA: The overall (single value) fan sound power level in dB re. 10^{-12} Watts, 'A' weighted.
dBA: Estimated sound pressure level (re:0.0002 microbar) based on a single ducted installation at 5 ft., using a directivity factor of 1.

Accessories Included

Weather Hood w/Birdscreen Std Flange, Factory Assembled
Wall Box w/ Bolted Guard, Factory Assembled
Extended Lube Lines - Polyethylene
Supply Fan Adder
Variable Speed V-Belt Drive, 1.5 SF

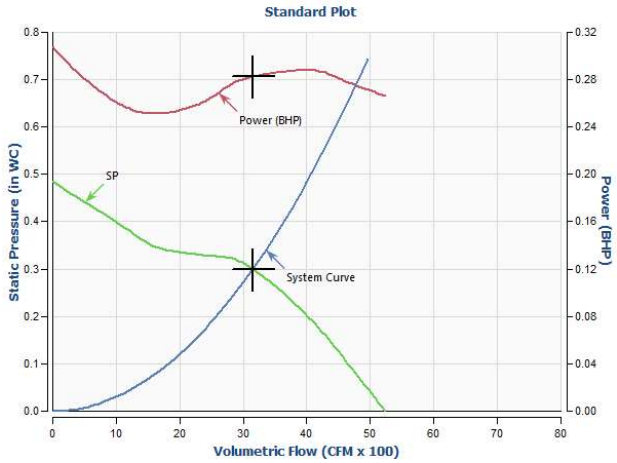

Job Name: SI Panda House

Tag: MAF-3/4
Customer: Mueller Associates, Inc.
Job ID: 071720
Date: October 13, 2020

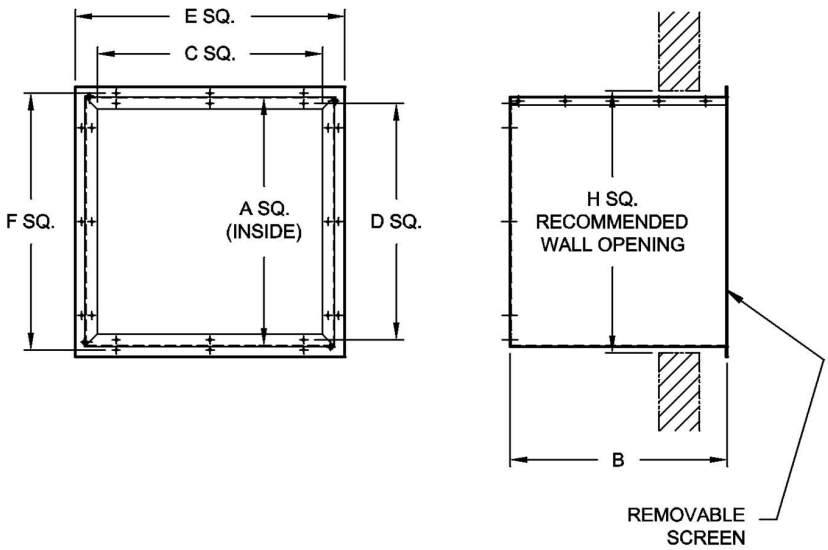

TYPICAL MOUNTING INSTALLATION

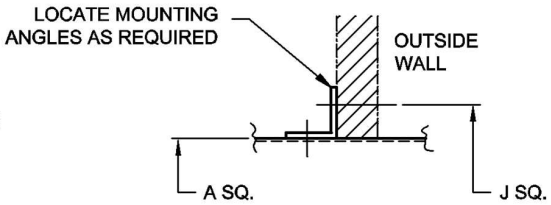

SIZE	A SQ.	B	C SQ.	D SQ.	E SQ.	F SQ.	MAT'L GAGE	H SQ.	J SQ.
14	17.25	33.50	14.63	15.75	19.75	18.13	18	18.00	19.38
16	20.25	34.00	17.63	18.75	22.75	21.13	18	21.00	22.38
18	22.25	34.00	19.63	20.75	24.75	23.13	18	23.00	24.38
21	25.25	36.00	22.63	23.75	27.75	26.13	18	26.00	27.38
24	28.25	37.00	25.63	26.75	30.75	29.13	18	29.00	30.38
30	36.25	40.00	33.63	34.75	38.75	37.13	16	37.00	38.38
36	42.25	40.00	39.63	40.75	44.75	43.13	16	43.00	44.38
42	48.25	43.00	45.63	46.75	50.75	49.13	16	49.00	50.38
48	54.25	43.00	51.63	52.75	56.75	55.13	16	55.00	56.38
54	60.25	49.00	57.63	58.75	62.75	61.13	16	61.00	62.38
60	66.25	50.00	63.63	64.75	68.75	67.13	16	67.00	68.38

D4820-6A 018-4104

Tag: MAF-3/4
Customer: Mueller Associates, Inc.
Job ID: 071720
Date: October 13, 2020

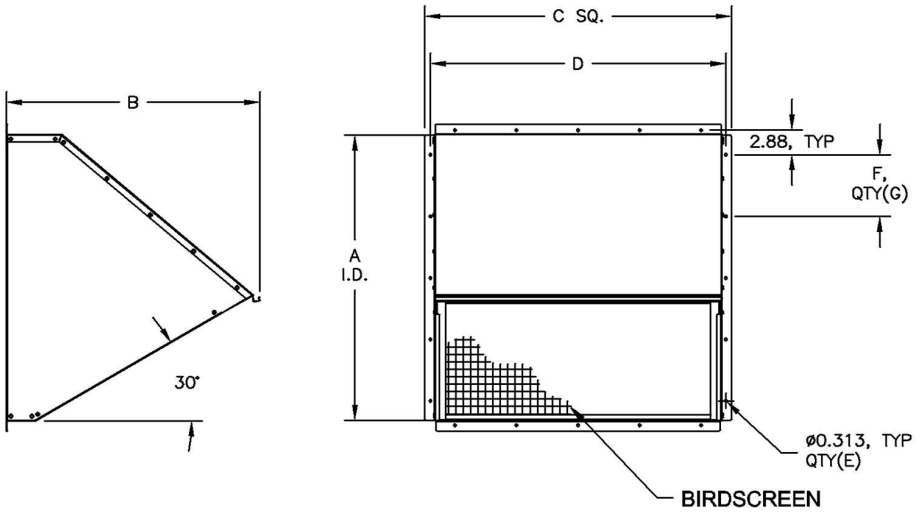

SIZE	A	B	C	D	E	F	G
14	14.63	16.43	17.13	15.75	12	5.00	2
16	17.63	18.43	20.13	18.75	12	6.50	2
18	19.63	19.80	22.13	20.75	12	7.50	2
21	22.63	22.55	25.13	23.75	12	9.00	2
24	25.63	25.68	28.13	26.75	16	7.00	3
30	33.63	33.30	36.13	34.75	20	7.25	4
36	39.63	40.80	42.13	40.75	28	5.83	6
42	45.63	45.93	48.13	46.75	28	6.83	6
48	51.63	51.98	54.13	52.75	28	7.83	6
54	57.63	56.98	60.13	58.75	36	6.63	8
60	63.63	62.98	66.13	64.75	36	7.38	8

NOTES:

1. TO BE MOUNTED TO WALL BOX.

D4820-9D 006-4103

SUBMITTAL

Job Name: SI Panda House

Tag:	EF-1/2 High Flow
Customer:	Mueller Associates, Inc.
Job ID:	071720
Date:	July 17, 2020

BCRUSH - Smoke & Heat Centrifugal Upblast Roof Exhauster, Belt Driven

Construction Features

- UL listed for Smoke Control Systems, 500°F for 4 hours and 1000°F for 15 minutes
- Aluminum housing for durability and appearance
- Steel wheel provides rigidity when exposed to high temperature airstreams
- Multiple cooling tubes provide cooling by drawing outside air into the motor and drive compartment
- Motor compartment and wireway are insulated with ceramic insulation rated to 2000°F
- Dual groove drive oversized for added assurance

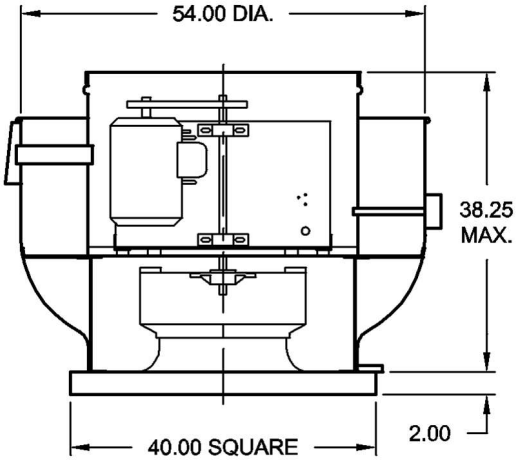

ROOF OPENING	34.50 X 34.50

D4401-1C BCRUSH 300B

Description	Qty	Model	Size	Wt (lb.)
	2	BCRUSH	300B	488

Approximate weight each, includes fan, motor and accessories.

Performance	CFM	SP (in WC)	RPM	Oper. BHP
	9,000	1.000	766	2.32

Temperature: 70 °F Altitude: 0 ft

Department of Energy	FEI	FEP (KW)	System FEI	System FEP (KW)
	1.41	2.08	N/A	N/A

Note that the Fan Energy Index (FEI) is an overall efficiency (wire-to-air) metric which includes not only the impact of the fan efficiency, but also each of the drive components used to operate the fan.
The Fan Electrical Input Power (FEP) is the amount of power of a given fan at an operating point characterized by a value of flow and pressure.

Motor Data	HP	RPM	Volt/Ph/Hz	Encl
	3	1,750	460V/3/60	ODP

Efficiency: Premium

Sound Data	Octave Bands	1	2	3	4	5	6	7	8	LwA	dBA	Sones
	Level at Inlet	88	90	85	78	76	73	66	58	82	68	21

LwA: The overall (single value) fan sound power level in dB re. 10^{-12} Watts, 'A' weighted.
dBA: Estimated sound pressure level (re:0.0002 microbar) based on a single ducted installation at 5 ft., using a directivity factor of 1.

Accessories Included

Birdscreen (Zinc Plated Steel)
Two Groove Drive - Minimum
Roof Curb, Self-Flashing, Vented, Galvanized Steel 12" H
Nameplate - Aluminum
Variable Speed V-Belt Drive, 2.0 SF

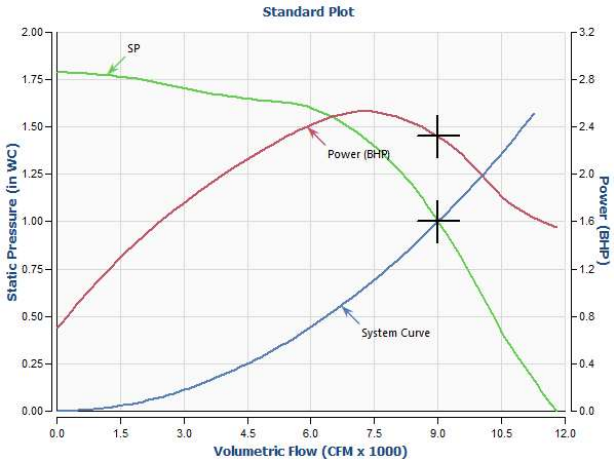

SUBMITTAL

Job Name: SI Panda House

S.J. Rafferty COMPANY, INC.

Tag: EF-1/2 Low Flow
Customer: Mueller Associates, Inc.
Job ID: 071720
Date: July 17, 2020

BCRUSH - Smoke & Heat Centrifugal Upblast Roof Exhauster, Belt Driven

Construction Features

- UL listed for Smoke Control Systems, 500°F for 4 hours and 1000°F for 15 minutes
- Aluminum housing for durability and appearance
- Steel wheel provides rigidity when exposed to high temperature airstreams
- Multiple cooling tubes provide cooling by drawing outside air into the motor and drive compartment
- Motor compartment and wireway are insulated with ceramic insulation rated to 2000°F
- Dual groove drive oversized for added assurance

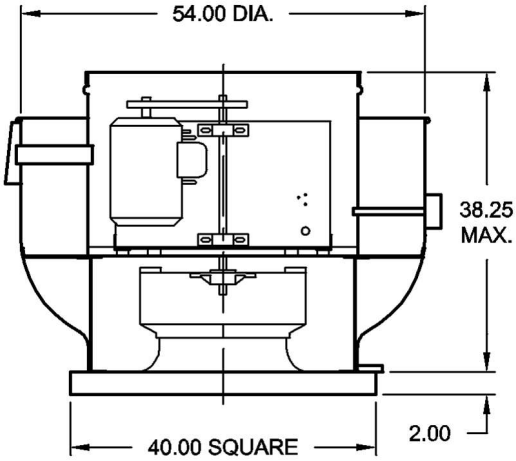

ROOF OPENING	34.50 X 34.50

D4401-1C BCRUSH 300B

Description	Qty	Model	Size	Wt (lb.)
	2	BCRUSH	300B	488

Approximate weight each, includes fan, motor and accessories.

Performance	CFM	SP (in WC)	RPM	Oper. BHP
	5,000	1.000	610	1.24

Temperature: 70 °F Altitude: 0 ft

Department of Energy	FEI	FEP (KW)	System FEI	System FEP (KW)
	1.44	1.17	N/A	N/A

Note that the Fan Energy Index (FEI) is an overall efficiency (wire-to-air) metric which includes not only the impact of the fan efficiency, but also each of the drive components used to operate the fan.
The Fan Electrical Input Power (FEP) is the amount of power of a given fan at an operating point characterized by a value of flow and pressure.

Motor Data	HP	RPM	Volt/Ph/Hz	Encl
	3	1,750	460V/3/60	ODP

Efficiency: Premium

Sound Data	Octave Bands	1	2	3	4	5	6	7	8	LwA	dBA	Sones
	Level at Inlet	81	80	76	69	67	63	57	50	73	59	11.5

LwA: The overall (single value) fan sound power level in dB re. 10^{-12} Watts, 'A' weighted.
dBA: Estimated sound pressure level (re:0.0002 microbar) based on a single ducted installation at 5 ft., using a directivity factor of 1.

Accessories Included

Birdscreen (Zinc Plated Steel)
Two Groove Drive - Minimum
Roof Curb, Self-Flashing, Vented, Galvanized Steel 12" H
Nameplate - Aluminum
Variable Speed V-Belt Drive, 2.0 SF

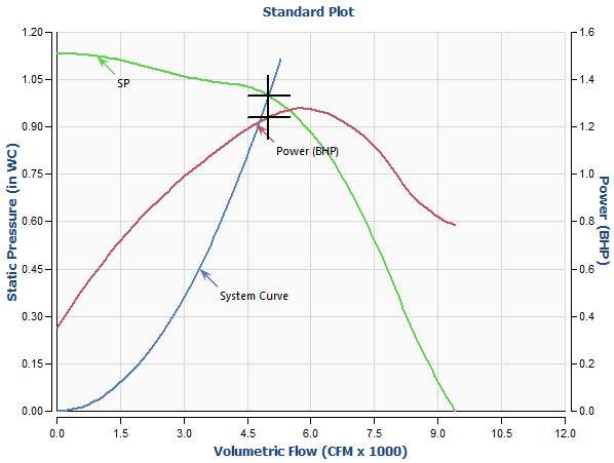

SUBMITTAL

Job Name: SI Panda House

S.J. Rafferty COMPANY, INC.

Tag:	EF-3 High Flow
Customer:	Mueller Associates, Inc.
Job ID:	071720
Date:	July 17, 2020

QSLSH - Smoke & Heat Mixed Flow Fan

Construction Features

- Mixed flow impeller with true airfoil die-formed, continuously welded blades.
- Removable discharge cone provides full access to the shaft, bearings, and fan sheave.
- Pivot-style motor base for ease of belt tension adjustment.
- Extended lubrication lines for ease of lubrication on all sizes.
- Totally enclosed belt guard is standard.
- UL listed for Smoke Control Systems, 500°F for 4 hours and 1000°F for 15 minutes.
- Minimum two-groove drive.

See Attached Centrifugal Drawing

Description	Qty	Model	Size	Width	Wt (lb.)
	1	QSLSH	270	SWSI	596

Approximate weight each, includes fan, motor and accessories.

Configuration	Class	Rotation	Arr	Disch	M. Pos	Disch Dir
	I	CW	9	HCH	C	Horizontal

Performance	CFM	SP (in WC)	RPM	Oper. BHP
	9,000	1.400	927	2.85

Temperature: 70 °F Altitude: 0 ft

Department of Energy	FEI	FEP (KW)	System FEI	System FEP (KW)
	1.39	2.55	N/A	N/A

Note that the Fan Energy Index (FEI) is an overall efficiency (wire-to-air) metric which includes not only the impact of the fan efficiency, but also each of the drive components used to operate the fan. The Fan Electrical Input Power (FEP) is the amount of power of a given fan at an operating point characterized by a value of flow and pressure.

Motor Data	HP	RPM	Volt/Ph/Hz	Enclosure
	5	1,800	230/460V/3/60	ODP

Efficiency: Premium

Sound Data	Octave Bands	1	2	3	4	5	6	7	8	LwA	dBA	Sones
	Level at Inlet	82	78	77	74	73	69	62	54	77	63	13.9
	Level at Outlet	84	82	79	76	74	69	62	56	79	64	15.3

LwA: The overall (single value) fan sound power level in dB re. 10^{-12} Watts, 'A' weighted.
dBA: Estimated sound pressure level (re:0.0002 microbar) based on a single ducted installation at 5 ft., using a directivity factor of 1.

Accessories Included

Access Door - Bolted
Flanges - Inlet / Outlet, Punched
Guard - Belt, OSHA Type
Belt Tube
Two Groove Drive - Minimum
Mounting Brackets - Ceiling
Extended Lube Lines
UL Listed Smoke Control - 500F(260C)/4Hrs, 1000F(538C)/15Min
Variable Speed V-Belt Drive, 2.0 SF
Shaft Grounding Ring
Mount TCF Motor

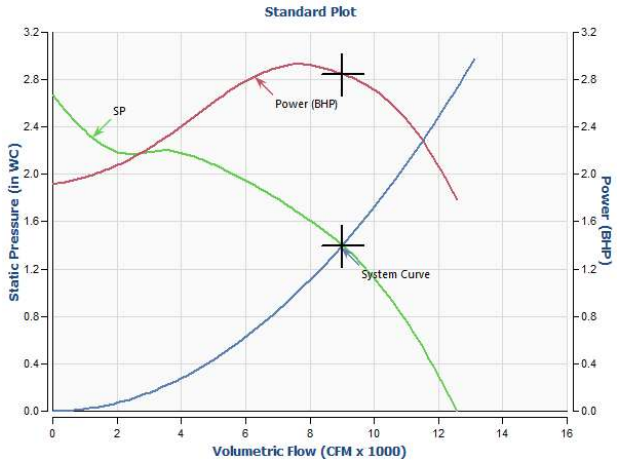

SUBMITTAL

Job Name: SI Panda House

Tag:	EF-3 Low Flow
Customer:	Mueller Associates, Inc.
Job ID:	071720
Date:	July 17, 2020

S.J. Rafferty COMPANY, INC.

QSLSH - Smoke & Heat Mixed Flow Fan

Construction Features

- Mixed flow impeller with true airfoil die-formed, continuously welded blades.
- Removable discharge cone provides full access to the shaft, bearings, and fan sheave.
- Pivot-style motor base for ease of belt tension adjustment.
- Extended lubrication lines for ease of lubrication on all sizes.
- Totally enclosed belt guard is standard.
- UL listed for Smoke Control Systems, 500°F for 4 hours and 1000°F for 15 minutes.
- Minimum two-groove drive.

See Attached Centrifugal Drawing

Description	Qty	Model	Size	Width	Wt (lb.)
	1	QSLSH	270	SWSI	596

Approximate weight each, includes fan, motor and accessories.

Configuration	Class	Rotation	Arr	Disch	M. Pos	Disch Dir
	I	CW	9	HCH	C	Horizontal

Performance	CFM	SP (in WC)	RPM	Oper. BHP
	5,000	1.400	783	1.67

Temperature: 70 °F Altitude: 0 ft

Department of Energy	FEI	FEP (KW)	System FEI	System FEP (KW)
	1.32	1.51	N/A	N/A

Note that the Fan Energy Index (FEI) is an overall efficiency (wire-to-air) metric which includes not only the impact of the fan efficiency, but also each of the drive components used to operate the fan. The Fan Electrical Input Power (FEP) is the amount of power of a given fan at an operating point characterized by a value of flow and pressure.

Motor Data	HP	RPM	Volt/Ph/Hz	Enclosure
	5	1,800	230/460V/3/60	ODP

Efficiency: Premium

Sound Data	Octave Bands	1	2	3	4	5	6	7	8	LwA	dBA	Sones
	Level at Inlet	78	74	72	69	67	64	57	50	72	58	10.1
	Level at Outlet	82	78	74	72	69	65	58	52	74	60	11.7

LwA: The overall (single value) fan sound power level in dB re. 10^{-12} Watts, 'A' weighted.
dBA: Estimated sound pressure level (re:0.0002 microbar) based on a single ducted installation at 5 ft., using a directivity factor of 1.

Accessories Included

Access Door - Bolted
Flanges - Inlet / Outlet, Punched
Guard - Belt, OSHA Type
Belt Tube
Two Groove Drive - Minimum
Mounting Brackets - Ceiling
Extended Lube Lines
UL Listed Smoke Control - 500F(260C)/4Hrs, 1000F(538C)/15Min
Variable Speed V-Belt Drive, 2.0 SF
Shaft Grounding Ring
Mount TCF Motor

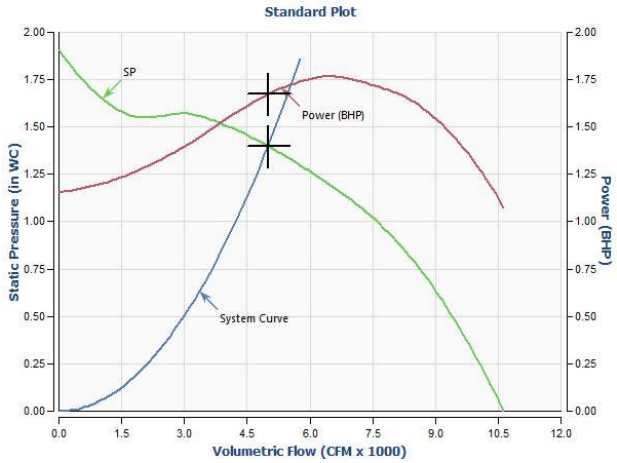

SUBMITTAL

Job Name: SI Panda House

S.J. Rafferty COMPANY, INC.

Tag: MAF-1/2
Customer: Mueller Associates, Inc.
Job ID: 071720
Date: July 17, 2020

WPB - Propeller Wall Fan, Light and Medium Duty, Belt Driven

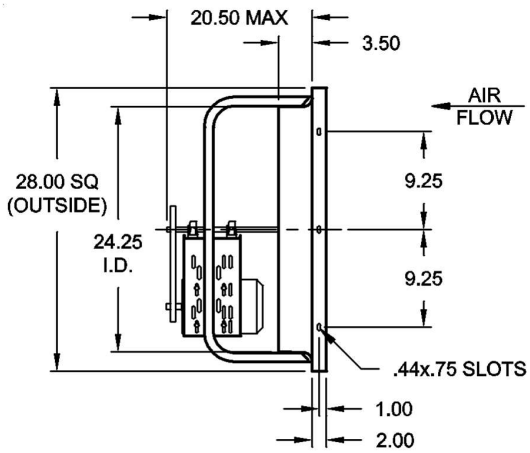

DAMPER SIZE	25.00 X 25.00

D4820-4 WPB 24L3

Construction Features

- Fabricated steel or cast aluminum propellers.
- Steel panel with deep formed inlet venturi which distributes air velocity uniformly.
- Pre-Punched mounting holes.
- Motor supports are constructed of heavy-gauge galvanized steel.
- Fans designed for supply service are provided with motor and drive located on the building interior side of the fan.

Description	Qty	Model	Size	Angle	Wt (lb.)
	2	WPB	24E4	25°	~~78~~

Approximate weight each, includes fan, motor and accessories.

Configuration	Class	Rotation	Arr	Disch	M. Pos	Disch Dir
	N/A	W/A	9	S	--	Irrelevant

Performance	CFM	SP (in WC)	RPM	Oper. BHP
	3,150	0.300	1,005	0.28

Temperature: 70 °F Altitude: 0 ft

Department of Energy	FEI	FEP (KW)	System FEI	System FEP (KW)
	1.96	0.30	N/A	N/A

Note that the Fan Energy Index (FEI) is an overall efficiency (wire-to-air) metric which includes not only the impact of the fan efficiency, but also each of the drive components used to operate the fan. The Fan Electrical Input Power (FEP) is the amount of power of a given fan at an operating point characterized by a value of flow and pressure.

Motor Data	HP	RPM	Volt/Ph/Hz	Enclosure
	1/2	1,750	115V/1/60	ODP

Efficiency: Standard

Sound Data	Octave Bands	1	2	3	4	5	6	7	8	LwA	dBA	Sones
	Level at Inlet	87	82	79	76	73	70	64	58	79	64	15.6

LwA: The overall (single value) fan sound power level in dB re. 10^{-12} Watts, 'A' weighted.
dBA: Estimated sound pressure level (re:0.0002 microbar) based on a single ducted installation at 5 ft., using a directivity factor of 1.

Accessories Included

Supply Fan Adder
Variable Speed V-Belt Drive, 1.5 SF

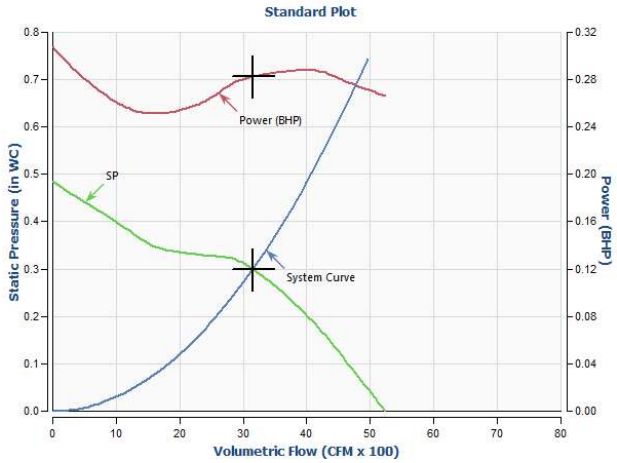

SUBMITTAL

Job Name: SI Panda House

S.J. Rafferty COMPANY, INC.

Tag:	MAF-3/4
Customer:	Mueller Associates, Inc.
Job ID:	071720
Date:	July 17, 2020

WPB - Propeller Wall Fan, Light and Medium Duty, Belt Driven

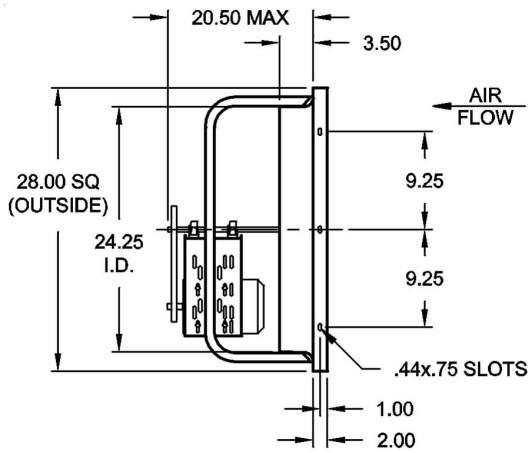

DAMPER SIZE	25.00 X 25.00

D4820-4 WPB 24L3

Construction Features

- Fabricated steel or cast aluminum propellers.
- Steel panel with deep formed inlet venturi which distributes air velocity uniformly.
- Pre-Punched mounting holes.
- Motor supports are constructed of heavy-gauge galvanized steel.
- Fans designed for supply service are provided with motor and drive located on the building interior side of the fan.

Description	Qty	Model	Size	Angle	Wt (lb.)
	2	WPB	24E4	25°	78

Approximate weight each, includes fan, motor and accessories.

Configuration	Class	Rotation	Arr	Disch	M. Pos	Disch Dir
	N/A	N/A	9	S	--	Irrelevant

Performance	CFM	SP (in WC)	RPM	Oper. BHP
	3,150	0.300	1,005	0.28

Temperature: 70 °F Altitude: 0 ft

Department of Energy	FEI	FEP (KW)	System FEI	System FEP (KW)
	1.96	0.30	N/A	N/A

Note that the Fan Energy Index (FEI) is an overall efficiency (wire-to-air) metric which includes not only the impact of the fan efficiency, but also each of the drive components used to operate the fan. The Fan Electrical Input Power (FEP) is the amount of power of a given fan at an operating point characterized by a value of flow and pressure.

Motor Data	HP	RPM	Volt/Ph/Hz	Enclosure
	1/2	1,750	115V/1/60	ODP

Efficiency: Standard

Sound Data	Octave Bands	1	2	3	4	5	6	7	8	LwA	dBA	Sones
	Level at Inlet	87	82	79	76	73	70	64	58	79	64	15.6

LwA: The overall (single value) fan sound power level in dB re. 10^{-12} Watts, 'A' weighted.
dBA: Estimated sound pressure level (re:0.0002 microbar) based on a single ducted installation at 5 ft., using a directivity factor of 1.

Accessories Included

Supply Fan Adder
Variable Speed V-Belt Drive, 1.5 SF

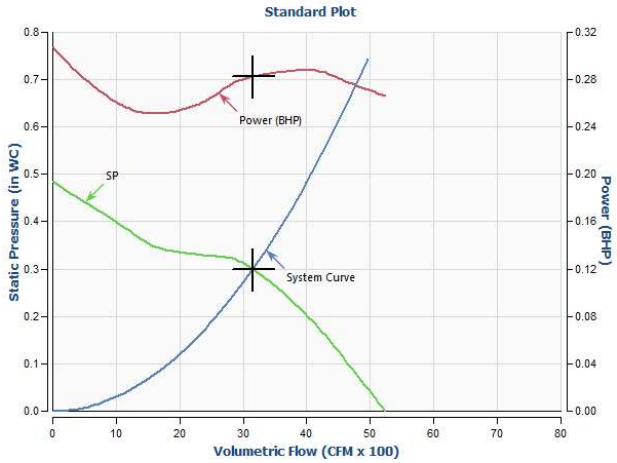

SUBMITTAL

S.J. Rafferty COMPANY, INC.

Job Name: SI Panda House

Customer: Mueller Associates, Inc.
Job ID: 071720
Date: July 17, 2020

Tag: EF-1/2 High Flow, EF-1/2 Low Flow

Twin City Fan Companies, Ltd.
Member of Air Movement and Control Association
5959 Trenton Lane - Minneapolis, MN 55442-3238

POWER VENTILATORS FOR SMOKE CONTROL SYSTEMS

BCRUSH SERIES

UNIT SIZE	A	B MAX.	C	E INSIDE	H ROOF OPENING	STANDARD CURB SIZE	MAX HP. STD.	MAX HP. HP	AVG. SHIP WT. (LB.)
110B/140BHP	30.00	28.56	28.00	24.00	18.5 x 18.5	22.5 x 22.5	1/2	–	135
120B		27.19							
140B/160BHP		27.68					1	1	145
160B		29.81							180
160BMP		28.44							
180B	36.00	32.31	30.00	30.00	24.5 x 24.5	28.5 x 28.5	2	2	
180BMP		29.19							
180BHP		31.00							
210B	45.00	35.61	28.25	34.00	28.5 x 28.5	32.5 x 32.5	2	3	245
210BHP		32.94							
240B		37.56							
240BHP		34.31							
300B	54.00	38.25	31.00	40.00	34.5 x 34.5	38.5 x 38.5	5	5	365
300BHP		34.88							
360B	63.00	43.88	34.00	46.00	40.5 x 40.5	44.5 x 44.5	5	7.5	375
360BHP		39.68							
420B	69.00	46.75	36.00	52.00	46.5 x 46.5	50.5 x 50.5	7.5	–	385
480B	75.00	49.13	39.00	58.00	52.5 x 52.5	56.5 x 56.5	7.5	–	490

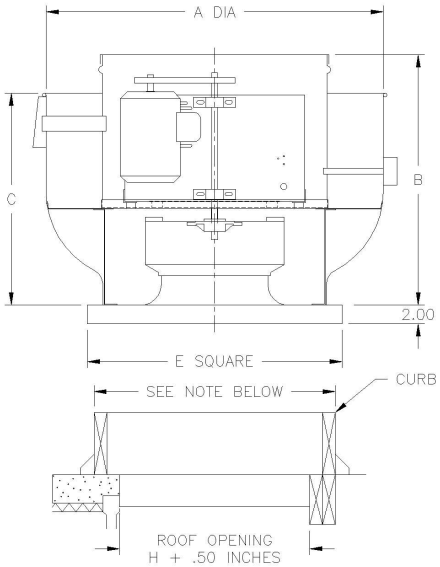

NOTE: OUTSIDE DIMENSION OF CURB BASE SHOULD BE 1" TO 1.50" LESS THAN INSIDE CURB CAP DIMENSION "E", DEPENDING ON THICKNESS OF FLASHING MATERIAL USED. IF CURB HINGES ARE USED, SPECIFY 1.50" DIFFERENCE.

FEATURES

- HEAVY–GAUGE, SPUN ALUMINUM HOUSING.
- MOTOR COMPARTMENT VENTED TO AID IN COOLING THE MOTOR.
- HEAVY–GAUGE ZINC COATED WIRE BIRDSCREEN STANDARD.
- NEMA 3R DISCONNECT SWITCH STANDARD.
- CLASS B INSULATED MOTOR, MINIMUM.
- MOTOR PREWIRED TO THE DISCONNECT SWITCH.
- 2 GROOVE DRIVES SIZED FOR A MINIMUM OF 200% OF DRIVEN HORSEPOWER.
- DEEP INLET VENTURI DESIGN PROVIDES QUIET AND EFFICIENT OPERATION.
- NON–OVERLOADING STEEL WHEEL DYNAMICALLY AND STATICALLY BALANCED.
- BEARINGS ARE OF PILLOW BLOCK DESIGN WITH AN L10 LIFE IN EXCESS OF 100,000 HRS.
- DESIGNED TO MEET THE IRI REQUIREMENT OF 500°F FOR A MINIMUM OF 4 HRS. AND THE SBCCI REQUIREMENT OF 1000°F FOR 15 MIN.

TCF CERTIFIES THAT THE BCRUSH SERIES SHOWN HEREIN IS LICENSED TO BEAR THE AMCA SEAL. THE RATINGS SHOWN ARE BASED ON TESTS AND PROCEDURES PERFORMED IN ACCORDANCE WITH AMCA PUBLICATION 211 AND AMCA PUBLICATION 311 AND COMPLY WITH THE REQUIREMENTS OF THE AMCA CERTIFIED RATINGS PROGRAM.

ALL BCRUSH MODELS ARE LISTED U.L. LISTED, FOR SMOKE CONTROL SYSTEMS, FILE NO. E158680.

NOTE: UL LISTING AVAILABILITY IS DEPENDENT ON MOTOR AND ACCESSORIES SELECTED.

FAN SPECIFICATIONS					MOTOR SPECIFICATIONS					
QTY.	MODEL NO.	CFM	SP	FANRPM	HP	RPM	VOLTS	PH	HZ	ENCL.

TAG:

CUSTOMER: /REP

PROJECT:

SUBMITTED:

APPROVED:

ACCESSORIES:

TCF RESERVES THE RIGHT TO SUBSTITUTE MATERIAL OR CHANGE PRODUCT SPECIFICATIONS.

SAM 5/24/2011	ORDER NUMBER	REV.
D–4401–	E	

S.J. Rafferty COMPANY, INC.

Customer: Mueller Associates, Inc.
Job ID: 071720
Date: July 17, 2020

Tag: EF-3 High Flow, EF-3 Low Flow

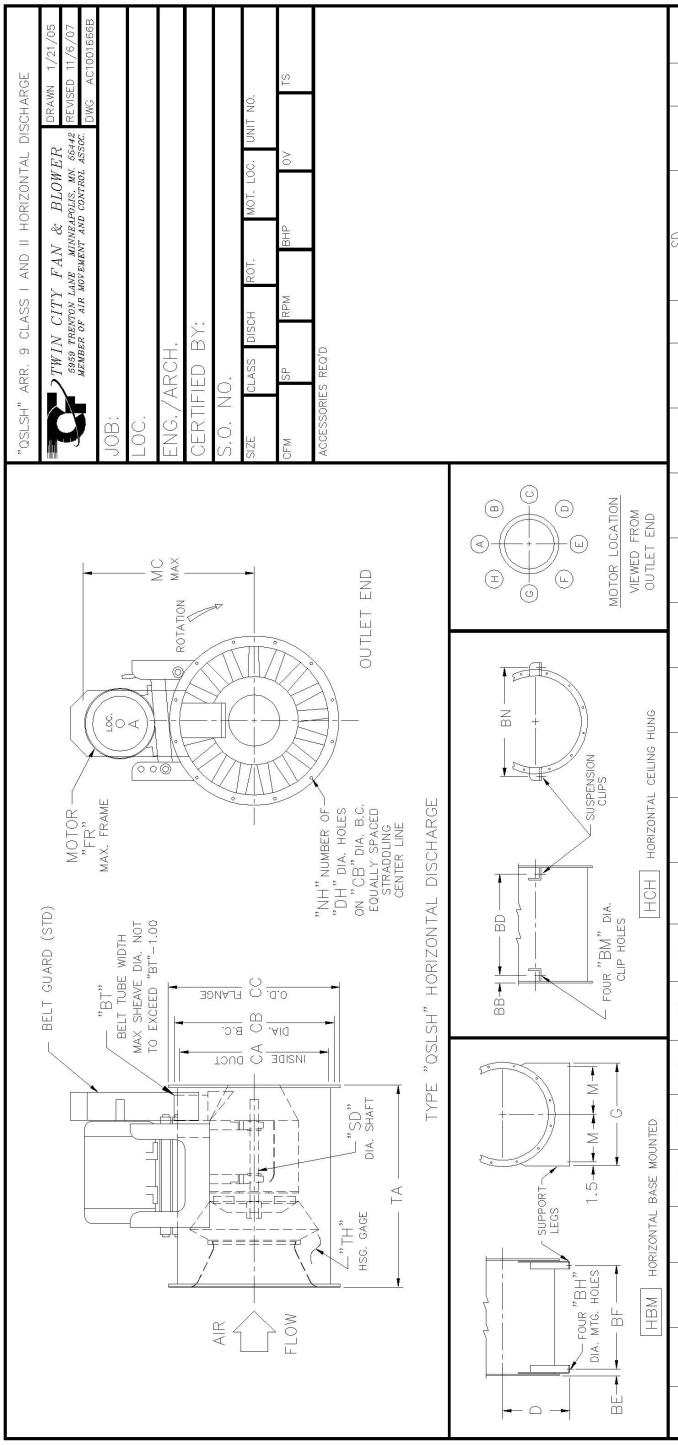

SIZE	BB	BD	BE	BF	BH	BM	BN	BT	CA	CB	CC	D	DH	FR	G	M	MC	NH	SD CL I	SD CL II	TA	TH	SIZE
150	1.00	25.75	1.06	25.63	0.44	0.56	23.50	6.50	20.25	22.13	23.38	14.00	0.56	215T	23.38	10.19	25.73	8	1.000	1.187	27.75	10	150
165	1.00	28.63	1.06	28.50	0.44	0.56	25.88	6.50	22.25	24.38	25.75	15.00	0.69	256T	25.75	11.25	27.73	8	1.000	1.437	30.63	10	165
182	1.50	30.88	1.06	31.75	0.44	0.56	27.75	6.50	24.69	26.75	28.00	16.00	0.69	256T	28.00	12.50	34.45	12	1.000	1.437	33.88	12	182
200	1.50	34.19	1.06	35.06	0.56	0.56	30.13	7.25	27.06	29.13	30.31	18.00	0.81	256T	30.31	13.66	36.20	12	1.187	1.437	37.19	12	200
222	1.50	37.19	1.31	37.56	0.56	0.56	33.13	8.00	30.06	32.13	33.38	20.00	0.81	256T	33.38	15.19	37.65	12	1.187	1.437	40.19	12	222
245	1.50	41.31	1.31	41.69	0.56	0.81	36.25	8.93	33.13	35.13	36.38	21.00	0.81	286T	36.38	16.69	37.86	12	1.437	1.687	44.31	12	245
270	1.50	45.81	1.31	46.19	0.56	0.81	39.63	9.75	36.50	38.50	39.75	23.00	0.81	286T	39.75	18.38	42.16	12	1.437	1.687	48.81	12	270
300	1.50	51.56	1.31	51.94	0.56	0.81	43.75	10.93	40.56	43.13	44.88	25.00	0.81	326T	44.88	20.94	45.13	16	1.437	1.937	54.56	10	300
330	1.50	56.88	1.31	57.25	0.56	0.81	47.88	12.00	44.63	47.25	49.00	27.00	0.81	326T	49.00	23.00	46.56	16	1.687	2.187	59.88	10	330
365	2.00	62.38	1.56	63.25	0.56	0.81	52.56	13.25	49.38	52.00	53.75	29.00	0.81	365T	53.75	25.38	51.50	16	1.937	2.187	66.38	10	365
402	2.00	69.00	1.69	69.63	0.81	0.81	57.56	14.75	54.38	57.50	59.75	33.00	0.81	365T	59.75	28.38	59.77	16	1.937	2.187	73.00	10	402
445	2.00	76.94	1.69	77.56	0.81	0.81	63.38	16.25	60.19	63.25	65.50	36.00	0.81	405T	65.50	31.25	62.22	16	1.937	2.437	80.94	10	445
490	2.00	85.00	1.69	85.63	0.81	0.81	69.44	18.00	66.25	69.38	71.63	39.00	0.81	405T	71.63	34.31	67.68	24	2.187	2.437	89.00	10	490
542	2.00	94.69	2.44	93.81	0.81	1.06	76.56	19.88	73.38	77.00	79.75	43.00	0.81	445T	79.75	38.38	71.51	24	2.437	2.687	98.69	10	542
600	2.50	103.75	2.44	103.88	0.81	1.06	85.38	22.13	81.19	84.75	87.50	47.00	0.81	445T	87.50	42.25	78.41	24	2.687	2.937	108.75	10	600
660	2.50	115.13	2.44	115.25	1.06	1.06	93.56	24.25	89.31	92.88	95.63	52.00	0.81	445T	95.63	46.31	82.77	24	2.937	3.437	120.13	10	660
730	2.50	127.69	2.44	127.81	1.06	1.06	102.94	26.88	98.75	104.38	107.13	57.00	0.81	445T	107.13	52.06	87.76	24	2.937	3.937	132.69	10	730

the pacesetter in quality prefab roof products

the pate company
245 eisenhower lane south • lombard, illinois 60148
630.705.1920 • 800.243.3018 • fax 630.705.1930
www.patecurbs.com • e-mail: sales@patecurbs.com

pate
curb adapter increaser

standard construction

Heavy ga. galvalume steel, unitized construction with full mitered corners, all seams welded, optional 1 1/2" thick rigid fiberglass insulation. All adapters reinforced in larger size dimensions. Foam gasket supplied with adapter.

p.o. no. _____
customer _____
_____
project _____
location _____
_____
architect _____
engineer _____

pate adapter

pc-ai

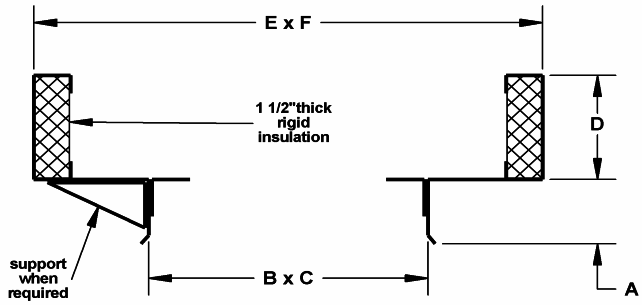

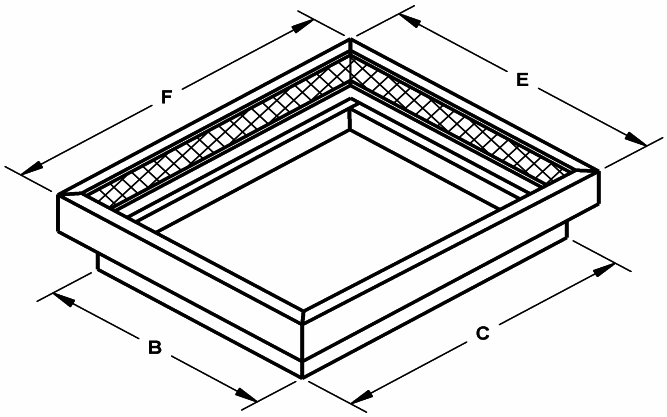

Options: galvanized, aluminum, stainless steel, damper ledge, access door, liners, vents

adapter requirements

quantity	tag	dimensions		A	DHP I.D.	D	options
		B x C	E x F				