RFIs
Project #: 1730103
Project: MSC Replace AHU's Phase 2 Labs 1 & 2

1. **Reference**: Stair Tower
   Question: During the site visit we notice that the contractor currently workings on the phase 1 project had a stair tower to access the roof - Are we to also include a stair tower for workers to access the roof? If yes, please indicate a location to install the stair tower.

   Answer: Yes SI requires a stair tower for workers to access the roof. Coordinate with COTR for location of stair tower.

2. **Reference**: Temporary Construction Entrance
   Question: During the site visit we notice that there was temporary construction entrance which was used for building the existing temporary unit AC-T1 – since we are to remove the existing temporary unit AC-T1 at the end of this project, are we also to include the removal of the temporary construction entrance and restore the site?

   Answer: Yes, include the removal of the temporary construction entrance and restore the site because it is part of temporary work.

3. **Reference**: Specification 010000, 11.2
   Question: Please confirm all work within the Labs, shall be performed during nighttime on weekdays, between the hours of 5 P.M and 7 A.M or on weekends.

Answer: Work within the Labs shall be performed between 5PM & 7AM. Labs will be utilized by SI staff between 7AM & 5PM, M-F. Coordinate with COTR.

4. **Reference**: M-4.2-11 Lab Equipment Protection Requirement
   Question:
   a) Can you provide us the existing labs furniture layouts?
      Contractor shall visit the site to see the lab furniture layouts.
   b) Please provide existing reflected ceiling plans of the affected labs and offices.
      Contractor shall determine on site the affected lab existing reflected ceiling.
      Clarification Question: Per Specification 024119-2, 1.7.C the contractor is to include an allowance for to replace 10% of damaged ceiling tiles that are remove with new tiles. Please advance how many tiles are to be figured for replacement. We do not have a reflected ceiling plan. Or please provide an allowance to carry for bidding purposes.
      Clarification Answer: In lab-1 and lab-2, reuse existing tiles as much as possible. Damaged ceiling tiles cause by renovation cannot be determined at this time.
   c) List of what furniture items will need protected with plywood etc.
      Based on lab-3 & 4 on going project, use plastic protection for furniture, fume hood and some lab equipment with coordination with lab occupant and COTR.
   d) Provide details of the types of protection we should include in our proposal?
      Based on lab-3 & 4 on going project, plastic cover will be used for the protection of office equipment/ furniture and lab furniture, fume hood and some lab equipment. Ply wood box will be used for lab important equipment to be coordinated with COTR.
   e) Note 3 calls for box type protection. What size boxes should we figure in our proposal and how many?
      Size of boxes will be determined on site on which lab equipment needs box protection per coordination with COTR and lab occupants.

Clarification Question: For bidding purposes, please provide approximate sizes and quantities of boxes to be provided in our proposal.
Clarification Answer: A change order request will be issued for boxing if it is determined that lab equipment needs to be protected by boxing.

Answer: See above

5. **Reference**: Existing Temporary Piping
   Question: The window glass that was removed for phase 1 for the temporary unit AC-T1 –
   a) Will we need to reinstall this window glass? Yes
   b) We noticed that this window glass is damaged, will we be provided a new glass unit, or do we need to include the new glass unit? – If we are to provide, please provide size, specs, etc. A new glass unit will be provided.
   c) Please provide the glazing contractor that removed the glass. You may use any qualified glazing contractor.
   d) Is there any roof repair associated with the removal of the existing temporary piping/ ductwork/ stands/ etc.? Repair roof as needed to maintain roof integrity & warranty.
   Clarification Question:
      a) Please provide the point of contact for the roofing contractor that holds the existing roof warranty. Vatica Contracting. 301-927-8530.
      b) Per the detail below we will have approximately 85-90 supports for the temporary ductwork which will require roof patching, are there any roof repairs associated with the existing temporary supply piping or ductwork we should be aware of? Coordinate with COTR, the existing temporary duct at roof serving the ongoing project lab-3 and lab-4 should be removed by the current contractor after lab-3 and lab-4 are completed and any damaged to roof cause by this removal should be repaired by the current contractor. Pls note that existing temporary duct at roof, which is the duct elbow after the existing temporary duct riser, will be reused for lab-1 and lab-2 shall remain. With regards to existing temporary piping at roof, they will be reused for existing AC-T1 for lab-1 and lab-2 and will be removed at the end of the project and any damage to roof cause by this removal will be repaired by lab-1 and lab-2 contractor.
      c) Also referencing the detail below the height given for the supports (12' max) conflicts with the notes on the temporary ductwork drawings (MT-4.10-.02 – MT-4.1-04) in which there is a note for the temporary ductwork to be "15ft above the roof." Please clarify the correct height for the temporary ductwork. Height varies with maximum height of 15'.

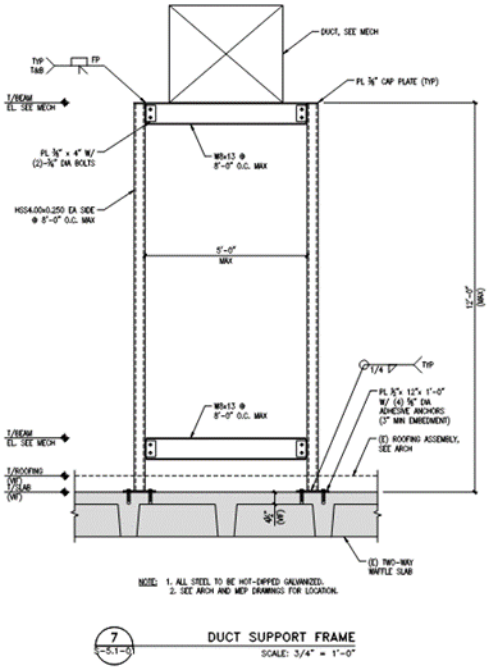

Answer: See above

6. **Reference**: Temporary Offices
   Question: Will SI provide us a space for a temporary office? – If not, please provide the laydown area where can we set our temporary office trailer.

Answer: No space interior to the building will be provided. Contractor shall place trailer at existing location of trailer from phase one. Existing electrical wiring and infrastructure will be available for connection. Coordinate with COTR.

7. **Reference**: Phase 1
   Question: When will phase 1 (AHU's 11 & 12) be completed?

Answer: Anticipated November 2022.

8. **Reference**: Lead Time
   Question: Current lead times on the mechanical equipment (AHUs) on this project could possibly take up to 54 weeks. Please advise if the contract time for completion will be extended to accommodate this.

Answer: Additional contract time will be reviewed & evaluated on a case by case basis by the COTR.

9. **Reference**: Drawing M-4.1-09
   Question: Please clarify the statement, "Relocate tables on the way identified on previous survey."

Answer: In room 2104, some tables need to relocate temporarily then return to its original location after work are completed in this room. Coordinate with COTR and lab occupant where to relocate the tables.

10. **Reference**: Drawing M-4.1-09, Lab Equipment Protection Requirement, Note 4
    Question: Please indicate locations where lab gas would need to be relocated or please provide an allowance to carry for bidding purposes.

Answer: SI will relocate gas tanks, if needed. Coordinate with COTR.

11. **Reference**: G-0.1-06 – General Note 2
    Question: Per this note we are to coordinate with the COTR if the sculptures interfere with the crane. Who is responsible for removing and relocating the sculptures?

Answer: If required, SI will remove & relocate sculptures. Coordinate with COTR.

12. **Reference**: Summary of Work 2.2.1
    Question: The existing temporary unit AC-T1 is government furnished since it was installed under previous recent project Lab-3 and Lab-4, contractor shall verify the unit capacities and associated utilities. – Can you please clarify our scope of work and what we are to include in our proposal for verifying the unit capacities and associated utilities.

Answer: After AC-T1 temporary duct is connected to existing SA air duct of Lab-1 or Lab-2 at roof, verify AC-T1 main duct supply air cfm is delivering 20,000 cfm, actual duct static pressure total and external, make sure automatic controls are working.

13. **Reference**: Quality Control 18.3. CQC Representative Designation and Authority:
    Question: CQC Representative, shall be on the jobsite at all times during progress, and shall not be the same individual as, or be subordinate to, the job superintendent or project manager.
    a) Please confirm the above statement is correct.
    b) Please confirm we will need to include in our proposal two onsite personnel; Superintendent, Quality Control Officer and the Superintendent can dual hat to include the SSHO Officer.
    c) Please confirm these onsite personnel must be direct employees of the General Contractor.

Answer: Superintendent & CQC Representative may be the same person. Shall be direct employees of the General Contractor.

14. **Reference**: 18.5.1. CQC Representative
    Question: The CQC Representative shall be a graduate engineer or architect with a minimum of seven (7) years of construction experience on projects similar to this one, including three (3) years of experience in Quality Control. Please advise if the above statement is correct.

Answer: It is not required that the CQC Representative be a graduate engineer or architect. Shall have a minimum of (7) years of construction experience similar to this project & include (3) three years of experience in Quality Control.

15. **Reference**: Detail 4/A-5.2-01
    Question: Drawing A-4.2-01 shows three new stair platforms. However, drawing A-5.2-01 has detail 4 that is not called out anywhere else. Please advise.

Answer: 4/A-5.2-01 Not Used

16. **Reference**: Drawing A-5.2-01
    Question: No structural sizes are given for the steel members nor is there a grating size and profile given. Can you please provide this information?

Answer: Stairs are a Delegated Design. See specification section 055119 Section 2.1 for Performance Requirements and Section 2.6 for Fabrication Requirements.

17. **Reference**: Volume 1 Drawings E-4.1-01/ E-5.1-01/ E-6.1-03, Circulating Pump CIRC-1-1
    Question: Drawing E-4.4-01 shows circulation pump CIRC-1-1 being fed from Panel 2EH2. The AC Wiring Diagram on Drawing E-5.1-01 and PAC14 Panel Schedule on Drawing E-6.1-03 shows the Circulating Pump being fed from Panel PAC14. Please clarify, is Circulating Pump CiRC-1-1 fed from Panel 2EH2 or from Panel PAC14?

Answer: The correct circuit for CIRC-1-1 is to be fed from panel 2EH2 as shown on E-4.1-01.

18. **Reference**: Volume 1 Drawing E-6.1-01, Transformer Feeders
    Question: The distance between Panel HDPLAB and the T30 Transformers for Lab 1 & Lab 2 are a significant length. The Riser Diagram shows feeding these transformers with #8 wire. Please clarify, is #8 wire sized correctly based on the distance between Panel HDPLAB and these transformers?

Answer: The #8 wire shown for the feeder conductor from HDPLAB to the T30 Transformers for Lab 1 & 2 are incorrect due to the estimated long distance of feeder cable. The correct feeder size for both feeders to Lab 1 & 2 is 3#4+1#G in 1" conduit (ground wire is also upsized in accordance with NEC 250.122(B)).

19. **Reference**: Volume 1 Drawing E-6.1-03, Panel 2HD3 Circuit 2/4/6
    Question: Panel Schedule 2HD3 circuit 2/3/6 shows a 175A circuit breaker for Panel PAC14. Please clarify, is this a new 175A circuit breaker to be provided or is this circuit breaker existing?

Answer: The 175A/3P circuit breaker in panel 2HD3 at positions 2/4/6 should be a new circuit breaker.

20. **Reference**: Volume 2 Drawings E-4.2-01/ E5.2-01/ E6.2-03, Circulating Pump CIRC-02-1
    Question: Drawing E-4.2-01 shows circulating Pump CIRC-2-1 being fed from Panel 2EH2. The AC Wiring Diagram on Drawing e5.2-01 and PAC13 Panel Schedule on Drawing on E-6.2-03 shows the Circulating Pump being fed form Panel PAC13. Please clarify, is Circulating Pump CIRC-2-1 fed from Panel 2EH2 or from Panel PAC13?

Answer: The correct circuit for CIRC-2-1 is to be fed from panel 2EH2 as shown on E-4.1-01.

21. **Reference**: 010000 – 3.1 Contract Time for Completion and Multi Year Language Doc
    Question:
    - 010000 – 3.1 States - Completed within the total contract time of 420 calendar days (14 Months)
    - Multi Year Language Doc FY 22 Funding Increment: General Conditions states 3 months, FY 23 Funding Increment: General Conditions states 15 months (FY22 & 23 total of 18 Months)
    - Per the phasing plans M-8.1-01 and M-8.2-01 combine for a total of 77wks of onsite work, which works out to 18 months on site not including lead times (up to an additional 54 weeks) and submittals.
    - Please advise if the Contract Time for Completion is 14 Months or 18 Months. Please note per bullet 3, 18 months may be insufficient to complete this project.

Answer: Project duration is 18 months.

22. **Reference**: Volume 1 & 2 M-02-02 Mechanical Demolition Notes
    Question: 5. All demolition and new work shall be performed during winter and mild weather time, between October and April. - Please advise if this statement is correct.

Answer: Delete note 5 in Mechanical Demolition Notes. Coordinate all work with COTR.

23. **Reference**: G-0.1-06 Crane and Staging Plan, Note 1
    Question:
    Please advise if there are any utilities or underground structures in the vicinity of the crane location shown. Contractor to propose the final location for the crane after coordinating with underground existing utilities and structure.
    are there any weight restrictions for the crane? Provide crane sufficient to replace AHU's.
    a) Is there a proposed path for a temporary roadway for the crane/ staging area? Contractor to review site conditions and provide in plan. Coordinate with COTR.

Answer: see response in red above

24. Reference: Specification 237314.01, 2.1.A
    Question: For the custom air handling units you only list one acceptable manufacturer. Please advise if alternative manufacturers are acceptable? Could Klimak and Haakan be added to the list of acceptable manufacturers?

Answer: No. Kindly follow specifications for AHU manufacturer.

25. **Question:** Drawing HD-0.1-01 provides a lead in paint and surface coatings schedule. All items in the schedule show less than 0.5% lead. Please confirm specifically what measures are

required in order to remove these items, (ie worker training requirements, lead in construction standards, or full lead abatement standards).

Answer: The schedules included on drawings HD-0.1-01 are provided so the contractor can provide the necessary steps to protect their workers in accordance with OSHA. OSHA does not provide specifics on how a contractor is to protect their workers outside of the required two-hour lead awareness training. Lead in construction standards should be followed when disturbing surface coatings containing lead of any concentration. Since the coatings do not meet the EPA's definition of Lead-Based Paint, full lead abatement standards would not be required unless specified by the owner.

26. **Question:** The lab equipment protection requirement on sheets M-4.1-09 through M-4.1-12 and M-4.2-11 through M-4.2-16 states that the contractor is to provide hardwood box type covers on lab equipment. The drawings do not indicate any existing equipment, (size and location) in any rooms. Additionally, details on the box covers themselves are not provided. Without this information there is no way to quantify what equipment will need protection. Typically, a protection plan is provided within the drawings indicating this information for all bidders to equally quantify the hard covers required. Please provide a protection plan indicating this information.

Answer: Plastic cover will be used for the protection of office equipment/ furniture and lab furniture, fume hood and some lab equipment. Plywood box will be used for lab important equipment to be coordinated with COTR.

27. **Question:** Volume 1 Drawings E4.1-01 / E5.1-01 / E6.1-03, Circulating Pump CIRC-1-1 – Drawing E4.1-01 shows circulating Pump CIRC-1-1 being fed from Panel 2EH2. The AC Wiring Diagram on Drawing E5.1-01 and PAC14 Panel Schedule on Drawing on E6.1-03 shows the Circulating Pump being fed from Panel PAC14. Please clarify, is Circulating Pump CIRC-1-1 fed from Panel 2EH2 or from Panel PAC14?

Answer: The correct circuit for CIRC-1-1 is to be fed from panel 2EH2 as shown on E-4.1-01.

28. **Question:** Volume 1 Drawing E6.1-01, Transformer feeders – The distance between Panel HDPLAB and the T30 Transformers for Lab 1 & Lab 2 are a significant length. The Riser Diagram shows feeding these transformers with #8 wire. Please clarify, is #8 wire sized correctly based on the distance between Panel HDPLAB and these transformers?

Answer: The #8 wire shown for the feeder conductor from HDPLAB to the T30 Transformers for Lab 1 & 2 are incorrect due to the estimated long distance of feeder cable. The correct feeder size for both feeders to Lab 1 & 2 is 3#4+1#G in 1" conduit (ground wire is also upsized in accordance with NEC 250.122(B)).

29. **Question:** Volume 1 Drawing E6.1-03, Panel 2HD3 Circuit 2/4/6 -Panel Schedule 2HD3 circuit 2/4/6 shows a 175A circuit breaker for Panel PAC14. Please clarify, is this a new 175A circuit breaker to be provided or is this circuit breaker existing?

Answer: The 175A/3P circuit breaker in panel 2HD3 at positions 2/4/6 should be a new circuit breaker.

30. **Question:** Volume 2 Drawings E4.2-01 / E5.2-01 / E6.2-03, Circulating Pump CIRC-2-1 – Drawing E4.2-01 shows circulating Pump CIRC-2-1 being fed from Panel 2EH2. The AC Wiring Diagram on Drawing E5.2-01 and PAC13 Panel Schedule on Drawing on E6.2-03 shows the Circulating Pump being fed from Panel PAC13. Please clarify, is Circulating Pump CIRC-2-1 fed from Panel 2EH2 or from Panel PAC13?

Answer: The correct circuit for CIRC-2-1 is to be fed from panel 2EH2 as shown on E-4.1-01.

31. **Question:** On Drawing M0.3.02 Mechanical General Note 5 indicates that "DETAILED AND DIMENSIONED COORDINATION DRAWINGS WITH ELEVATIONS FOR ALL AREAS…..AT THE MINIMUM SHOWING ALL DUCTWORK,…….TERMINAL UNITS,…….CONTROLS…." are required.

    Please clarify the details of this requirement.

    Please indicate if the intent is to show all "CONTROLS" components (sensors, actuators, switches, etc) as this will add significant costs.

    Answer: Controls components to show on the floor plans only.

32. **Question:** The drawings and specifications contain conflicts associated with the acceptability of using plenum-rated wiring not in conduit for low voltage, controls wiring.
    - The following indicate plenum-rated wire, not in conduit is acceptable:
    - Specifications section 230923-28 3.3.D indicates "Provide plenum rated cabling in the ceiling space for all work related to pneumatic control upgrade work."

    Notes on various drawings:
    - M4.1.09 thru 12, and M4.2.11 thru 16 general note 6 & 8
    - M5.1.04, M5.1.05, M5.2.04, M5.2.05 control general notes 5 and coded new work notes - office note 3
    - Etc.

    The following indicate that all wiring shall be in conduit:
    - Specifications section 260533-5 3.1.A.1 & 4 indicates EMT for use in exposed and/or concealed locations.

    Is plenum-rated wiring, not in conduit acceptable as per the misc. notes throughout the drawings and specification section 230923?

    Is conduit/raceway required for all applications/locations per specifications 260533?

    Answer: Provide Plenum rated cabling in the ceiling spaces for control upgrade work as indicated on the drawing.

33. **Question:** Specification section 230923-7 1.9.G indicates "Do not locate DDC panels above ceilings. Panels shall be located in mechanical rooms or in equipment systems rooms" while do to the nature of this renovation and as indicated on the New Work Mechanical Drawings (M), DDC controllers and/or panels will indeed be mounted in the ceilings of the lab spaces.
    - Please confirm that on this project, DDC controllers and/or panels can be mounted in the ceilings.

    Answer: DDC controllers can be mounted in the ceiling as needed.

34. **Question:** Specification section 230923-16 & 17 2.8.E provides performance requirements associated with Pressure Transmitters/Transducers with three levels of accuracy/performance (High/Mid/Low). Neither the specifications nor the drawings provide direction as to which level of sensors should be applied for the varying sensing locations (ie, filter DPTE, duct static pressure, etc)
    - Please clarify the applicability of the three levels of sensing.

    Answer: Use high performance/accuracy pressure sensors for all pressure sensors associated with Labs except the filter differential pressure which may be medium performance/accuracy. Equipment serving general areas or offices use medium performance/accuracy sensor except the filter differential pressure which may be low performance/accuracy.

35. **Question:** The existing MSC facility AHUs are all part of a previous Energy Savings Performance Contract (ESPC) whereas the sequence of operation (SOO) of each existing AHU provides DDC controls input/feedback to the MSC Central Plant DDC System to accomplish energy savings/optimization SOO algorithms such that the guaranteed savings are met/exceeded.
    - Please confirm that the new Lab AHUs should be re-incorporated into the ESPC optimization SOO.

    Answer: Confirmed, the new LAB AHU direct digital controls (DDC) will provide input/feedback to the MSC Central Plant DDC system to meet the previous Energy Savings Performance Contract (ESPC) requirements. Additionally, the new DDC will be compatible with existing Siemens BAS/DDC system as indicated on the drawings and specification.

36. **Question:** The existing temporary AHU is owned and furnished by the government since it was installed under previous recent project for Lab 3 and Lab 4.

    36a. M-8.1-01 Phase 2 note 3 states "Contractor is requested to verify the temporary unit and associated utilities". Please provide additional details as to what the expectations of the Contractor are associated with this statement.

    Answer: After AC-T1 temporary duct is connected to existing SA air duct of Lab-1 or Lab-2 at roof, verify AC-T1 main duct supply air cfm is 20,000 cfm, actual duct static pressure total and external, make sure automatic controls are working.

36b. Is the government responsible for routine maintenance of temporary AHU during the duration of the project?

Answer: Contractor to provide maintenance of AC-T1.

36c. In the event the temp AHU fails while serving the lab spaces, does the government assume responsibility for getting the AHU operational?

Answer: Contractor is responsible for getting AC-T1 operational.

Clarification Question: For bidding purposes, please confirm this would be considered an unforeseen condition and handled as a change order.
Clarification Answer: Repair issues will be addressed on an individual basis and how they are resolved will be determined by the COTR.

37. **Question:** The new heating hot-water piping at VAVs and air valve reheat coils in the labs are specified for copper type K tubing per 23 21 13. The existing pipe material is not specified in drawings. Is the existing HWS/R in lab spaces serving VAVs and reheat coils copper tubing?

    Answer: Provide copper pipe for hot water piping at VAVs and air valve reheat coils per specification.

38. **Question:** Please confirm if there are any Buy American requirements?

    Answer: Yes, FAR 52.225-11 Buy American-Construction Materials applies per the terms and conditions of the IDIQ contract.

39. **Question:** All copper is specified to be copper type K. Due to the current market conditions, would copper type L be acceptable in lieu of type K?

    Answer: Per SI design standard, copper piping minimum type L may be used for piping 3" and smaller for above grade.

40. **Question:** There is conflicting information outlined in the drawings regarding the government owned and furnished temporary AHU 'AC-T1':

    -Lab 2 Drawings sheet M-8.2-01, Phase 4 Note 6 states "Temporary Unit AC-T1, ductwork and piping shall be removed and coordinated with COTR to return/hand over the temporary unit to SI. Clean everything and patch all temporary openings with fire stopping materials to match existing"
    -Lab 2 Drawings sheet M-8.2-01 Note 7 states "The government furnished temporary unit system with all associated utilities, piping, ductwork, supports, power, etc. shall be removed completely at the end of project. Coordinate with COTR before removal of temporary unit system."

At the end of project, does the temporary AHU remain onsite where currently installed from the previous Lab 3/4 project for SI to relocate or remove from site? Or is the Contractor required to disassemble, demo, and remove AC-T1 from site?

Answer: Contractor is required to remove, disassemble, demo and remove AC-T1 from site. Coordinate with COTR before removal of temporary unit system.

41. **Question:** The LMLAB panelboards and T30 transformers are shown to be fed from panelboard HDPLAB located in room E2114. This panelboard and room number are not shown on Lab 1 & 2 contract drawings. Please indicate on an overall floor plan drawing where room E2114 is located.

    Answer: Room E2114 is on the 2nd floor, located in the Lab 3 area of the facility. See snippets below.

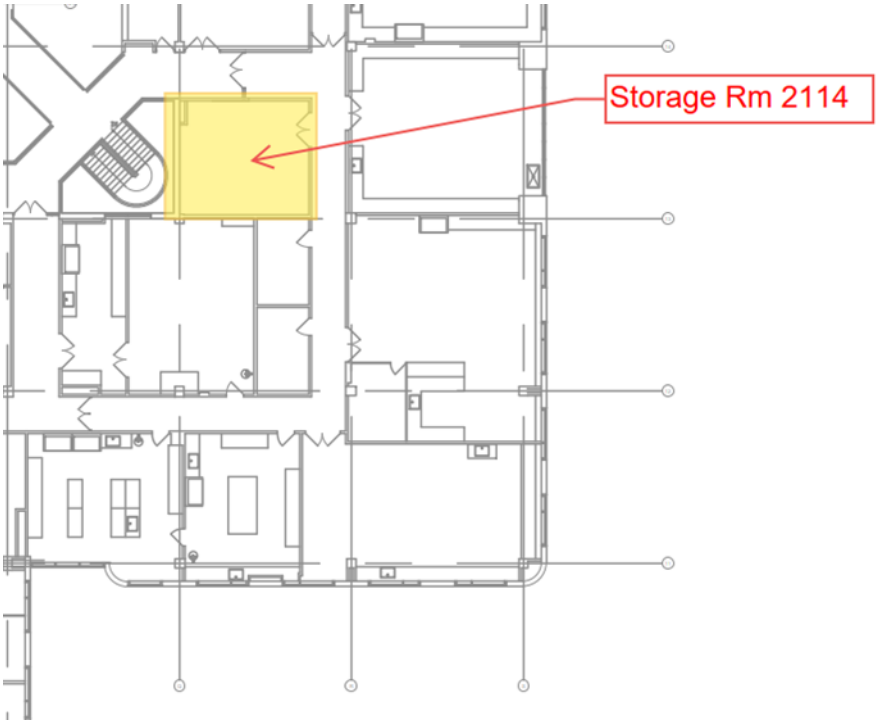

42. **Question:** On M 0.1 02 note 5 states to provide detailed and dimensioned coordination drawings with elevations for all areas including mechanical rooftop units… is the Smithsonian asking for BIM in thisnote?

    Answer: SI is not asking for BIM in this project.

43. **Reference:** 7/ A-5.1-02
    Question: Detail 7 calls for the concrete knee walls to be painted. We do not have a painting spec. Please provide a painting spec.

    Answer:
    Concrete Substrates, Nontraffic Surfaces: Concrete Knee Walls
    1. High performance Architectural Latex System MPI EXT 3.1P
       a. Prime Coat: Primer, alkali resistant, water based, MPI #3
       b. Intermediate Coat: Latex, exterior, matching topcoat
       c. Low-Sheen Topcoat: Latex, exterior, high performance architectural low sheen (MPI Gloss Level 3-4), MPI #315