Architect

Polshek Metcalf Tobey and Partners
Joint Venture

320 West 13 Street
New York, NY 10014
(212) 807-7171

1750 Presidents Street
Reston, VA 22090
(703) 318-5000

In Association with

Native American Design Collaborative

Louis L. Weller, President
401 Alvardo Drive S.E. - Suite D
Albuquerque, New Mexico 87108

Landscape

EDAW, Inc.
601 Prince Street
Alexandria, Virginia 22314
Tel: (703) 836-1414
Fax: (703) 549 5869

Civil

VIKA, Inc.
8180 Greensboro Drive - Suite 200
McLean, Virginia 22102
Tel: (703) 442-7800
Fax: (703) 761-2787

Structural

Cagley & Associates
6141 Executive Boulevard
Rockville, Maryland 20852
Tel: (301) 881-9050
Fax: (301) 881-1125

Mechanical, Electrical, Plumbing, Fire Protection & Fire Alarm

Syska & Hennessy, Inc.
11 West 42nd Street
New York, New York 10036
Tel: (212) 556-3350
Fax: (212) 556-3333

Security

Steven R. Keller and Associates
1939 Algonquin Avenue
Deltona, Florida 32725
Tel: (904) 789-6740
Fax: (904) 532-5969

Graphics

Salestrom Design
434 Sixth Avenue
New York, New York 10011
Tel: (212) 353-3020
Fax: (212) 353-3082

Interiors

RDA International
225 Peachtree Street
Suite 700 - South Tower
Atlanta, Georgia 30303.
Tel: (404) 658-5900
Fax: (404) 658-5931

Lighting

Cline, Bettridge, Bernstein
30 West 22nd Street
New York, New York 10010
Tel: (212) 741-3280
Fax: (212) 741-3112

Acoustics

Shen Milsom & Wilke, Inc.
6 East 39th Street
New York, New York 10036
Tel: (212) 725-2552
Fax: (212) 725-0864

Cost Estimates

ANADAC
7900 West Park Drive, Suite A503
McLean, VA 22102
Tel: (703) 917-7810
Fax: (703) 917-7820

SMITHSONIAN INSTITUTION

OFFICE OF DESIGN & CONSTRUCTION

955 L'ENFANT PLAZA, SW, SUITE 3230 (202) 287-3432
WASHINGTON, DC 20024 FAX (202) 287-3018

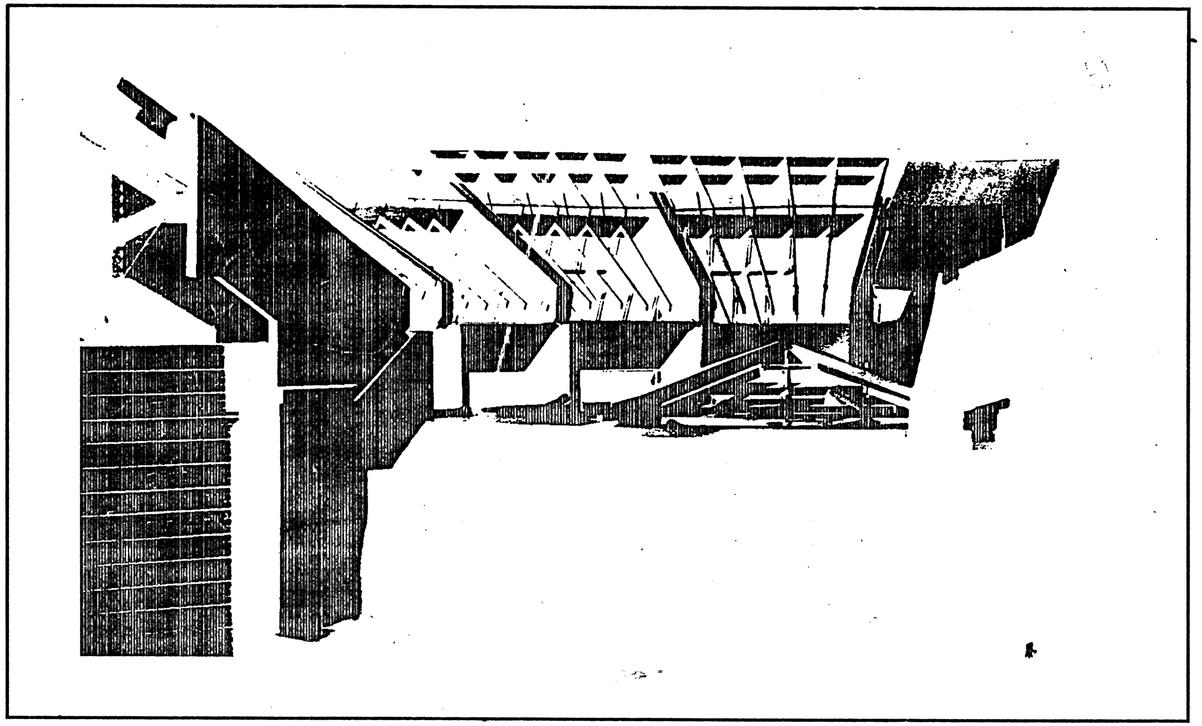

National Museum of The American Indian Cultural Resources Center Suitland, Maryland

VOLUME TWO

NMAI
CULTURAL RESOURCES CENTER

Architect
Polshek Metcalf Tobey and Partners
Joint Venture

James Stewart Polshek and Partners
320 West 13 Street
New York, NY 10014

Metcalf Tobey and Partners
1750 Presidents Street
Reston, Virginia 22090

In Association With
Native American Design Collaborative

Louis L. Weller, President
401 Alvarado Drive S.E. – Suite D
Albuquerque, New Mexico 87108

Structural Engineer
Cagley and Associates
6141 Executive Boulevard
Rockville, Maryland 20852

MEP Engineer
Syska and Hennessy, Inc.
11 West 42 Street
New York, New York 10036

(other consultants)

APPROVAL BLOCK

Office of Design and Construction
APPROVAL BLOCK

APPROVED: [signature] 7-18-95
APPROVED: [signature] 7/18/95
APPROVED: [signature] 8/3/95
APPROVED: [signature] 8/4/95

This project is approved as being in conformance with the applicable provisions of the Smithsonian Institution Office Memorandum 789, as amended.

[signature] 8/8/95
William L. Thomas, Associate Director

SMITHSONIAN INSTITUTION

Office of Design and Construction
955 L'Enfant Plaza, SW, Suite 3230
Washington, DC 20024

Project No.
ODC No. 912205B

Project Title
CULTURAL RESOURCES CENTER
SUITLAND, MARYLAND

Facility
NATIONAL MUSEUM OF THE AMERICAN INDIAN

Sheet Title
COVER SHEET
VOLUME TWO

CONFORMED DOCUMENTS 9/30/96
REV. 01, AMENDMENTS 1-8

Revisions Date

FINAL

Date Issued:	3.31.95	Sheet No. T200
Scale:	---	
Drawn by:	RJP	
Checked by:	WK	93 OF 420

VOLUME TWO
DRAWING LIST

T200 Cover – Volume Two
T201 Drawing List – Volume Two

ARCHITECTURAL

A001 Abbrev., Legend, Gen. Notes

CONSTRUCTION PLANS
A100 Controlling Dimensions – Steel Layout Plan
A101 Lower Level Plan – South
A102 Lower Level Plan – North
A103 Entry Level Plan – South
A104 Entry Level Plan – North
A105 Mezzanine Level Plan – South
A106 Mezzanine Level Plan – North
A107 Roof Plan
A108 Basement Plan & Stair 11

ELEVATIONS AND SECTIONS
A201 South and East Elevations
A202 North and West Elevations
A203 Partial Elevations
A204 Building Section/Elevation
A205 Building Section
A206 Building Section

DETAILS
A300 Roof Construction Types

PRECAST WALL SECTIONS, ELEVATIONS, DETAILS, PRECAST DIAGRAMS
A301 Precast Wall Sections (typical)
A302 Precast Wall Sections
A303 Precast Wall Sections and Details
A305 Wall Sections and Details

CMU WALL SECTIONS, ELEVATIONS AND DETAILS; SPECIAL SHAPES
A310 CMU Wall Sections, Elevations, & Details
A311 Southeast Terrace – Sections/Elevations
A312 CMU Wall Sections & Details
A313 Wall Sections and Details at Oversized Access
A314 Oversize Access – CMU Wall Sections,

A316 Plan Details Details & Special Shapes

MEZZANINE & SLOPED ROOF
A320 Sections @ Mezz. – Ribs 16, 1, 2,
A321 Sections @ Mezz. – Ribs 3, 4, 5
A322 Sections @ Mezz. – Ribs 6, 7
A323 Details, North Wall, Mezzanine
A323.1 Northwest Mezz. Wall Section & Details
A323.2 Details NW Corner Mezzanine
A323.3 NW Corner Mezzanine
A324 Section Details @ Mezz.
A324.1 Details, Mezzanine
A325 Plan Details @ Mezz.
A326 Window @ Mezzanine
A328 Plans, Elevations, Details Along Rib 7
A329 Details @ Southeast Mezz.

TERNE COATED STAINLESS STEEL @ MEZZANINE
A333 Curb/Gutter Details
A334 Lower Roof Details

ENTRY CANOPY & ROTUNDA, ARCH. CONC. PIERS
A335 Lobby and Entry Plaza Section
A337 Entrance Canopy Details
A338 Entrance Canopy Details
A339 Entrance Canopy Details
A340 Entrance Canopy Details – Trellis
A345 Entry Planter Area – Plans & Sections
A346 North Terrace Plan, Sections & Details
A347 Rotunda Area – Plan Details
A348 Rotunda Area – Window & Concrete Details
A348.1 Plaza & Planter Details

CLOSED RIB PAINTED ALUM., MECH. DOGHOUSE
A355 Louvered Mech. Penthouses – Plans, Sections & Details

SKYLIGHT TYPES & DETAILS
A360 Dome Skylights & Details
A361 Ring Skylight & Details
A362 Cone Skylights & Details

STOREFRONT, LOUVERS & WINDOW TYPES AND DETAILS
A365 Window and Louver Types and Details
A366 Window Types and Details
A368 Exterior Storefront Elevations
A369 Storefront Details
A370 Storefront Details

OVERHEAD DOOR TYPES
A375 Overhead Door Details

COOLING TOWER ENCLOSURE & STAIR
A380 Plans, Sections, Elevations
A381 Plans, Sections, Elevations
A382 Plans, Sections, Elevations

EAST PLAZA ENTRY AREA
A384 East Plaza Details

NORTH BRIDGE, WEST FOOT BRIDGE, WEST STAIR & EXTERIOR RAILING
A385 North Bridge and Exterior Railing Details
A386 O.A.I. Shaft Section & Details
A387 Exhaust Shaft

GUARD BOOTH
A390 Guard Booth Plans & Details
A391 Guard Booth Details

ARCHITECTURAL (continued)

PLAN SECTOR DRAWINGS & INTERIOR DETAILS

LOWER LEVEL SECTOR DRAWINGS
A401.1 Sector 1 – Lower Level
A402.1 Sector 2 (not issued)
A403.1 Sector 3
A404.1 Sector 4
A405.1 Sector 5
A406.1 Sector 6
A407.1 Sector 7
A408.1 Sector 8
A409.1 Sector 9 – South
A409.2 Sector 9 – North
A410.1 Sector 10
A410.2 Interior Elev. & Details – Sector 10

ENTRY LEVEL SECTOR DRAWINGS
A411.1 Sector 1 – Entry Level
A412.1 (not issued)
A413.1 Sector 3
A414.1 Sector 4
A414.2 Plan, Section, Details @ Knuckle
A415.1 Sector 5
A416.1 Sector 6
A417.1 Sector 7
A418.1 Sector 8
A419.1 Sector 9
A420.1 Sector 10
A420.2 Interior Elev. & Details – Sector 10
A420.3 Interior Elev. & Details – Sector 10
A420.4 Ventwood Details
A420.5 Reception Area Millwork
A420.6 Sector 10 Details
A420.7 Sector 10 Details
A420.8 Sector 10 Details

SCHEDULES AND DETAILS
A421 Finish Schedule
A422 Finish Schedule
A423 Door Types & Details
A424.1 Door Frame Details (See Project Manual for Door Schedule)
A424.2 Door Frame Details
A425 Equipment & Schedule
A426 Equipment & Schedule
A431.1 Partition Types
A431.2 Partition Types
A431.3 Typ. Interior Partition Details
A432.1 Fire Rated Walls – Lower Level
A432.2 Fire Rated Walls – Entry Level
A432.3 Fire Rated Walls – Mezz. & Basement Levels
A433 Millwork Sections
A434 Millwork Sections

TOILET ROOMS
A440 Toilet Room Plans & Elev.'s
A441 Toilet Room Plans & Elev.'s

STAIRS, ELEVATORS
A501 Stair 1 & Elevator 1 Plans, Sections and elevations
A501.1 Elevator 1 & Penthouse– Elevations & Details
A501.2 Elevator 1 & Penthouse – Roof Plan & Details
A501.3 Elevator 1 & Penthouse – Details
A501.4 Elevator 1 & Penthouse – Details
A501.5 Elevator 1 & Penthouse – Details
A501.6 Elevator 1 & Penthouse – Details

A502.1 Stair 2, Elevator 4 – Plans
A502.2 Stair 2, Elevator 4 – Building Sections
A502.3 Elevator 4 – Details
A502.4 Lobby of Elevator 4 – Details
A502.5 Details – SW Terrace
A502.6 Reveal at Elevator 4 – Details
A502.7 Details

A503 Stair 3, Elevators Cab 2 & 3
A504 Stair 4, 5 and 12
A505 Elevators 2 & 3
A506 Stair 6
A507 Stair 7, 8, 9 & 10

REFLECTED CEILING PLANS
A601 Lower Level Plan – South
A602 Lower Level Plan – North
A603 Entry Level Plan – South
A604 Entry Level Plan – North
A605 Mezzanine Level Plan – South
A606 Mezzanine Level Plan – North
A608 Basement Plan

FURNITURE PLANS
A801 Lower Level Plan – South
A802 Lower Level Plan – North
A803 Entry Level Plan – South
A804 Entry Level Plan – North
A805 Mezzanine Level Plan – South
A806 Mezzanine Level Plan – North
A808 Basement Plan

COLLECTION STORAGE
A901 Lower Level Plan – South
A902 Lower Level Plan – North
A903 Entry Level Plan – South
A904 Entry Level Plan – North
A905 Mezzanine Level Plan – South
A906 Mezzanine Level Plan – North
A910 Collection Storage Equip. Details
A911 Collection Storage Equip. Details
A912 Collection Storage Equip. Details
A920 (Not issued) 3

2411201 10-2-96 5:24:27 pm EST

NMAI
CULTURAL RESOURCES CENTER

Architect
Polshek Metcalf Tobey and Partners Joint Venture

James Stewart Polshek and Partners
320 West 13 Street
New York, NY 10014

Metcalf Tobey and Partners
1750 Presidents Street
Reston, Virginia 22090

In Association With
Native American Design Collaborative

Louis L. Weller, President
401 Alvarado Drive S.E. – Suite D
Albuquerque, New Mexico 87108

Structural Engineer
Cagley and Associates
6141 Executive Boulevard
Rockville, Maryland 20852

MEP Engineer
Syska and Hennessy, Inc.
11 West 42 Street
New York, New York 10036

(other consultants)

Key Plan

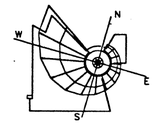

SMITHSONIAN INSTITUTION

Office of Design and Construction
955 L'Enfant Plaza, SW, Suite 3230
Washington, DC 20024

Project No.
ODC No. 912205B

Project Title
CULTURAL RESOURCES CENTER
SUITLAND, MARYLAND

Facility
NATIONAL MUSEUM OF THE AMERICAN INDIAN

Sheet Title
DRAWING LIST
VOLUME TWO

01 – AMENDMENT 1 THROUGH 8 9.30.96
Revisions Date

FINAL

Date Issued: 3.31.95	Sheet No. T201
Scale:	
Drawn by:	
Checked by: WK	94 OF 420

ABBREVIATIONS

AB	ANCHOR BOLT			GC	GENERAL CONTRACTOR	MIN	MINIMUM			RT	RUBBER TILE
AC	AIR CONDITION	DF	DRINKING FOUNTAIN	GEN	GENERAL	MIR	MIRROR			RTN	RETURN
ACOUS	ACOUSTICAL	DH	DOUBLE HUNG	GL	GLASS, GLAZING	MISC	MISCELLANEOUS			RVS	REVERSE
ACT	ACOUSTICAL CEILING TILE	DIAG	DIAGONAL	GND	GROUND	MO	MASONRY OPENING				
AD	AREA DRAIN	DIAM	DIAMETER	GT	GROUT	MTD	MOUNTED			S	SOUTH
ADD	ADDENDUM	DIM	DIMENSION	GWB	GYPSUM WALL BOARD	MTG	MOUNTING			SC	SOLID CORE
ADH	ADHESIVE	DIV	DIVISION	GYP	GYPSUM	MULL	MULLION			SCHED	SCHEDULE
ADJ	ADJACENT	DMPR	DAMPER			MWK	MILLWORK			SD	SOAP DISPENSER
AFF	ABOVE FINISH FLOOR	DN	DOWN	HB	HOSE BIB					SECT	SECTION
AGG	AGGREGATE	DR	DOOR	HC	HOLLOW CORE	N	NORTH			SHT	SHEET
ALT	ALTERNATE	DS	DOWNSPOUT	HD	HEAD	NAT	NATURAL			SIM	SIMILAR
ALUM	ALUMINUM	DWG	DRAWING	HCAP	HANDICAP(PED)	NIC	NOT IN CONTRACT			SLNT	SEALANT
ANOD	ANODIZED	DWR	DRAWER	HDW	HARDWARE	NO	NUMBER			SPEC	SPECIFICATION(S)
APPRX	APPROXIMATE			HDWD	HARDWOOD	NOM	NOMINAL			SQ	SQUARE
ARCH	ARCHITECTURAL			HM	HOLLOW METAL	NTS	NOT TO SCALE			SS	STAINLESS STEEL
ASPH	ASPHALT	E	EAST	HOR	HORIZONTAL					STA	STATION
AUTO	AUTOMATIC	EB	EXPANSION BOLT	HP	HIGH POINT	OC	ON CENTER			STC	SOUND TRANSMISSION COEFFICIENT
		EJ	EXPANSION JOINT	HR	HOUR	OD	OUTSIDE DIAMETER			STD	STANDARD
BD	BOARD	EL	ELEVATION	HT	HEIGHT	OFF	OFFICE			STL	STEEL
BIT	BITUMINOUS	ELEC	ELECTRICAL	HTG	HEATING	OH	OPPOSITE HAND			STOR	STORAGE
BLDG	BUILDING	ELEV	ELEVATOR	HVAC	HEATING VENTILATING & AIR CONDITIONING	OPG	OPENING			STRG	STORAGE
BLK	BLOCK	ELVTR	ELEVATOR			OPP	OPPOSITE			STRUCT	STRUCTURAL
BLKG	BLOCKING	EMER	EMERGENCY			OVHD	OVERHEAD			SUSP	SUSPENDED
BM	BEAM	ENCL	ENCLOSURE			OZ	OUNCE			SYM	SYMMETRICAL
BOT	BOTTOM	EP	ELECTRIC PANEL	ID	INSIDE DIAMETER					SYS	SYSTEM
BR	BACKER ROD	EQ	EQUAL	INCL	INCLUDE(D)	PAR	PARALLEL				
BRG	BEARING	EQUIP	EQUIPMENT	INSUL	INSULATION	PC	PRECAST			T	TREAD
BRK	BRICK	EST	ESTIMATE	INT	INTERIOR	PKG	PARKING			T&G	TOUNGE & GROOVE
BSMT	BASEMENT	EWC	ELECTRIC WATER COOLER	INTER	INTERMEDIATE	PL	PLATE			TEL	TELEPHONE
		EXH	EXHAUST			PLAM	PLASTIC LAMINATE			TG	TEMPERED GLASS
CAB	CABINET	EXIST	EXISTING	JAN	JANITOR	PLAS	PLASTER			THK	THICK, THICKNESS
CB	CATCH BASIN	EXP	EXPOSED	JT	JOINT	PLBG	PLUMBING			THR	THRESHOLD
CEM	CEMENT	EXT	EXTERIOR			PLYWD	PLYWOOD			TO	TOP OF
CER	CERAMIC	FA	FIRE ALARM	kg	KILOGRAM	PNL	PANEL			TRTD	TREATED
CI	CAST IRON	FBO	FURNISHED BY OTHERS	KIT	KITCHEN	PR	PAIR			TYP	TYPICAL
CJ	CONTROL JOINT	FD	FLOOR DRAIN			PREFAB	PREFABRICATED				
CL	CLOSET	FDN	FOUNDATION			PRTR	PRESSURE TREAT(ED)			UC	UNDERCUT
CLG	CEILING	FE	FIRE EXTINGUISHER	L	LENGTH	PT	POINT			UNFIN	UNFINISHED
CONN	CONNECTION	FEC	FIRE EXTINGUISHER CABINET	LAM	LAMINATE(D)	PTD	PAINTED			UON	UNLESS OTHERWISE NOTED
CONST	CONSTRUCTION	FF	FINISH FLOOR	LAV	LAVATORY	PTN	PARTITION			UR	URINAL
CLR	CLEAR	FIN	FINISH	LBL	LABEL						
cm	CENTIMETER	FIXT	FIXTURE	LP	LOW POINT	QT	QUARRY TILE			VB	VAPOR BARRIER
CMU	CONCRETE MASONRY UNIT	FLR	FLOOR	LT	LIGHT					VCT	VINYL COMPOSITION TILE
COL	COLUMN	FLG	FLASHING	LVR	LOUVER	R	RISER			VERT	VERTICAL
CONC	CONCRETE	FLUOR	FLUORESCENT	LLH	LONG LEG HORIZ.	RAD	RADIUS			VEST	VESTIBULE
CONT	CONTINUOUS	FO	FACE OF	LLV	LONG LEG VERT.	RB	RESILIENT BASE			VIF	VERIFY IN FIELD
CONTR	CONTRACTOR	FP	FIREPROOFING			RCP	REFLECTED CEILING PLAN			VNR	VENEER
COORD	COORDINATE	FR	FIRE RATED	m	METER	RD	ROOF DRAIN				
CORR	CORRIDOR	FRMG	FRAMING	mm	MILLIMETER	REC	RECESSED			W	WEST
CT	CERAMIC TILE	FS	FULL SIZE	MAS	MASONRY	REF	REFERENCE			W/	WITH
CTR	CENTER	FTG	FOOTING	MAT	MATERIAL	REINF	REINFORCED			WC	WATERCLOSET
CTSK	COUNTERSUNK	FUT	FUTURE	MAX	MAXIMUM	REQD	REQUIRED			W/O	WITHOUT
		FV	FIELD VERIFY	MECH	MECHANICAL	RESIL	RESILIENT			WD	WOOD
DBL	DOUBLE			MEMB	MEMBRANE	REV	REVISION, REVISED			WIN	WINDOW
DEC	DECORATIVE	g	GRAM	MET,MTL	METAL	RFG	ROOFING			WP	WATERPROOF(ING) OR WORK POINT
DEM	DEMOLISH	GA	GAGE	MEZZ	MEZZANINE	RL	RAIN LEADER			WT	WEIGHT
DET	DETAIL	GALV	GALVANIZED	MFR	MANUFACTURER	RM	ROOM				
DEP	DEPRESSED	GB	GRAB BAR	MH	MANHOLE	RO	ROUGH OPENING				

ARCHITECTURAL SYMBOLS

PLAN, ELEVATION, SECTION & DETAILS

- 1/A101 — BUILDING SECTION
- 1/A101 — WALL SECTION
- 1/A101 — BUILDING ELEVATION
- 1/A101 — DETAIL NO. TYP. / DWG. NO. TYP.
- 2/A101 — DETAIL NO. / INTERIOR ELEVATIONS / DWG NO.
- R RP — CARD READERS
- LAA — LOCALLY ANNUNCIATED AUDIBLE ALARM

- E-1503 — ROOM NUMBER
- FLOOR
- A — DOOR NO. CORRESPONDS TO ROOM NUMBER; SUFFIX IF MORE THAN ONE DOOR PER ROOM.
- XXXXX — PARTITION TYPE REFER TO A431.1, A431.2, A431.3, A431.4
- 1/A452 — WINDOW NUMBER (ELEVATION) (REFER TO A365 SERIES)
- 1 — GLASS TYPE
- TA-X — TOILET ACCESSORY
- 6/A500 — DETAIL SECTION
- J — FLOOR MTD JUNCTION BOX
- WALL OR SYSTEMS FURNITURE PANEL MTD UCS OUTLET, SEE A901-A908 — G — 1
- FLOOR MTD OUTLET
- P — TYPE "P" (GRAY) PRECAST
- R — TYPE "R" (RED) CONCRETE

SYMBOLS : REFLECTED CEILING PLAN

- 3000 — CEILING HEIGHT
- FLUOR. STRIP LIGHT
- RECESSED DOWNLIGHT
- WALL WASHER
- WALL MOUNTED LIGHT FIXTURE
- SPRINKLER (SEE F SERIES FOR TYPE)
- DIFFUSERS, GRILLES
- TRACK LIGHTS
- GLASS BREAK DETECTOR

- 1 X 4 FLUORESCENT
- 2 X 4 FLUORESCENT
- CEILING MOUNTED EXIT SIGN
- WALL MOUNTED EXIT SIGN
- CEILING MOUNTED SMOKE DETECTOR
- AP — ACCESS PANEL
- APG — ACCESS PANEL W/ GASKETED DOOR
- PENDANT LIGHT
- WALL MTD. MOTION DETECTOR
- C — CEILING MTD. MOTION DETECTOR

CODE INFORMATION

1. Construction Type BOCA TYPE 2A
2. Occupancy Classifications Use groups A-3,B,S-1,S-2
3. Applicable Codes:
   - BOCA National Building Code, 1990 Edition with Accumulative Supplement
   - Smithsonian Staff Handbook, Second Edition 1991
   - Life Safety Code (NFPA 101) 1991 Edition
   - Recommended Practice for Protection of Museum and Museum Collections (NFPA 911) 1991 Edition
4. Fire Protection Systems
   - Wet pipe automatic sprinkler system with quick response sprinklers throughout,except where subject to freezing.
   - Dry pipe automatic sprinkler system in locations subject to freezing
   - Class 1 wet standpipe system
   - Addressable analog fire alarm system with complete smoke detection
   - Emergency power supply
   - Phase I and Phase II emergency elevator operation
   - Smoke management system
   - Integration between the storage stacks and the automatic suppression system to permit better surface wetting by actuated sprinklers.

MATERIALS

- EARTH
- POROUS FILL, OR GRAVEL
- CONCRETE
- TYPE "P" (GRAY) PRECAST / TYPE "R" (RED) CONCRETE
- SPLIT FACE CONCRETE MASONRY UNITS
- NON-SPLIT FACE CONCRETE MASONRY UNITS
- SAND OR PLASTER
- STONE
- SEMI-RIGID INSULATION
- STEEL
- ALUMINUM
- WOOD BLOCKING, INTERMITTENT, NON-DIMENSIONED
- WOOD FRAMING OR CONTINOUS BLOCKING, DIMENSIONED
- PLYWOOD (SMALL SCALE)
- PLYWOOD (LARGE SCALE)
- FINISHED WOOD
- RIGID INSULATION
- BATT INSULATION

GENERAL NOTES

1. These notes apply to the full set of contract documents.
2. DO NOT SCALE DRAWINGS. Refer to dimensions only. Verify new dimensions prior to installation of any work. Coordinate work in any area with the work of the other trades prior to any work. If dimensions are in question, the contractor shall be responsible for obtaining clarification from the architect before proceeding.
3. All work shall be performed in strict compliance with all federal, state, and local codes and standards as adopted by the governing jurisdictions.
4. Existing conditions are based on the site survey field observation.. Actual existing conditions may differ from those shown.
5. The contractor shall take all necessary field measurements and field verify all conditions affecting the execution of the work. Any discrepancies between such conditions and the contract documents shall immediately be brought to the attention of the architect and/or COTR before proceeding with the work.
6. All dimensions are typically to finish face of wall or partition and column center lines unless noted.
7. All dimensions are given in millimeters unless otherwise noted. (Civil drawings are dimensioned in meters.)
8. Dimensions and notes for a given condition are typical for all similar conditions unless otherwise noted or indicated.
9. Titles, Captions, Headings, etc. are intended for general reference and are not intended to limit the work required in any way.
10. Work delinlated in these construction documents other than in Volume 2 indicated on architectural drawings is for reference and location purposes only unless otherwise indicated. Refer to appropriate consultants drawings and Project Manual for specific information pertaining to those trades and equipment.
11. Symbols, graphic conventions, and abbreviations relating to Civil, Structural, HVAC, Plumbing, Electrical and Security work can be found on those drawings.
12. Each contractor shall coordinate his work with the work of others. He shall keep himself informed of the progress and detail of the work of others and shall be responsible for coordinating and expediting his work with that of others so that the progress of the total work shall be kept on schedule.
13. Each contractor and/or trade fitting or placing his work into the work of others shall do so with the understanding that the installation of his work constitutes his acceptance of the suitability of the work in place. If the work of others is not acceptable for the installation of his work, he shall notify the owner and the architect. That work installed in the existing work of others which was unsuitable for such installation shall be the responsibility of the contractor and/or trade installing their work. No claims for additional compensation for bringing ones work into an acceptable conditions for the installation of the work of others or correcting work installed in unsuitable conditions will be considered. No claims for additional compensation for bringing ones own work into compliance with local codes and regulations and/or these contract documents will be considered.
14. This contractor is to coordinate his work with the work of other trades on the project, so that the work can proceed in an orderly, sequential, and professional manner.
15. Trash and debris shall be removed daily and disposed of in a legal landfill for the type of trash and debris being disposed of, or in a recycling facility as appropiate.
16. ENLARCED PLANS: Where enlarged or partial plans are referenced, dimensions and special detailing for finish requirements are noted on these plans and omitted on the smaller scale or overall plan areas.
17. Not Used
18. Not Used
19. FIRE PROTECTION: Fire protection requirements of the building structural frame, floor and roof assemblies, shall conform to the UL design specifications contained in the contract documents. For specific areas that require protection of individual components, see referenced details and assemblies. The contractor shall be responsible for fire protection at the site during the construction of the project.
20. DOOR OPENINGS: Referenced identification of door openings are scheduled by the corresponding room number in which the door opening occurs or gives access to, if more than one door occurs in a space, each is differentiated with a lower case letter, a, b, c, etc., Noted in each individual opening and following the room number in the door & opening schedule.
21. WINDOW WALL: Identification of the window wall section is referenced on the elevations and are detailed on the enlarged window wall sheets in which the opening occurs.
22. Not Used.
23. CONCRETE MASONRY UNITS. All masonry units are to be actually sized metrically at 190 high, 390 long, and either 190 wide or 90 wide unless indicated otherwise in the drawings. All corners are to be coursed with full uncut units. Cut block units are to fall on the inside corners of walls. Vertical mortar joints in ground faced concrete block work is to be struck flush prior to tooling the horizontal joints. All normal faced concrete block shall have all the joints tooled.
24. At the interior wythe of exterior masonry walls, provide a control joint aligned with each exterior control joint shown, unless otherwise noted.
25. All finishes refer to the ROOM FINISH SCHEDULE as shown in the construction documents.
26. The changes in flooring materials line between the finished floor in the corridor and the finished flooring within the rooms is to occur beneath the door between the door jamb stops. The door shall maintain a smooth uninterrupted swing of the door over the new flooring materials.
27. Unless otherwise noted, where channeled insulation and vapor barrier are adhered directly to CMU walls, vertical joints at the bottom course of CMU shall receive weep tubes @ 800mm on center.
28. Radial dimensions shall only be measured at rib lines.
29. Insulation shall be continuous. Any insulation removed during the installation of other materials shall be replaced. All vertical and horizontal channels of adjacent insulation panels shall align to provide a continuous ventilation path.
30. Any holes caused by fasteners or welds which penetrate the vapor barrier shall be immediately sealed with a compound which is compatible therewith,and with identical moisture and vapor penetration properties.
31. For exterior conditions, aluminum, and terne coated stainless steel shall be separated continuously with the foam tape, neoprene spacer or other architect approved non-conducting material.
32. Prior to fabrication of casework, the contractor shall verify all significant dimensions.
33. ACCESS PANELS Contractor shall furnish and install access panels for all items in the work where required for,including but not limited to, the following: service , access , periodic maintenance, repair, resetting,temporary and/or permanent shut-off. All locations exposed to view shall be fully coordinated by the General Contractor, and submitted to the Architect and/or COTR prior to any rough-in work related to the final location of the equipment requiring access. Obtain Architect's and/or COTR's written approval prior to proceeding with this portion of the work. Failure to obtain Architect's written approval shall not relieve the Contractor from any and all remedial work required to locate access panels in locations acceptable to the Architect and/or COTR. Any and all access panels installed by the Contractor which have not received prior written approval by the Architect and/or COTR shall be removed and replaced including all related work associated therewith at the sole expense of the Contractor.Wherever possible,items requiring access shall be placed in areas provided with acoustical tile ceilings. All access panels shall be located on coordinated reflected ceiling plans by General Contractor. Include 50 (fifty) 600 X 600 speckle-edge
34. These Contract Documents include 6 full scale mock-ups. Mock-ups indicated shall be constructed with all associated components specified in these Contract Documents and will be used for both aesthetic and technical quality control. Mock-ups may be utilized for testing required by these Contract Documents,but will not be approved for aesthetics prior to successful completion of all required testing. Construction of permanently attached building components and materials represented by mock-ups shall not commence prior to the Contractor receiving the Architect's written approval. Any and all additional costs associated with replacement of rejected mock-up materials, including but not limited to, transportation, fabrication, reinstallation an/or reengineering,shall be at the sole expense of the Contractor. The following list delineates extent of each mock-up. Refer to associated details and specification for scope.

Mock-up #1	A204	TCS Aluminum siding, steel channel masonry, etc.
Mock-up #2	A201	Masonry bluestone precast diamond window, etc.
Mock-up #3	A345	Skylight, etc.
Mock-up #4	A420.1	Stone & wood floor, wood wall system, wood column, etc.
Mock-up #5	A107	Trellis, etc.
Mock-up #6	A900	Collections Storage System

35. Unless otherwise noted, all gypsum board shall be furnished with trim accessories as specified. Contractor note these accessories not shown on the drawings for clarity. Gypsum board separated by joint sealant shall be furnished with L beads as specified.
36. At all locations where vent tube, weep tube, weep hole, and/or open joints are specified, provide weep hole ventilators or fiberglass insect screen. Protect opening completely. Maintain continuous ventilation.
37. These Contract Documents contain (6) SIX Additive Alternates. Refer to Contract Documents for scope of work.
    - ADDITIVE ALTERNATE #1 NORTH BRIDGE
    - ADDITIVE ALTERNATE #2 FURNITURE PACKAGE
    - ADDITIVE ALTERNATE #3 NOT USED
    - ADDITIVE ALTERNATE #4 SIGNAGE
    - ADDITIVE ALTERNATE #5 COLLECTIONS STORAGE EQUIPMENT
    - ADDITIVE ALTERNATE #6 SECURITY
38. Contractor shall coordinate installation of Area of Rescue Assistance Equipment (by owner) with COTR. Provide all rough-ins for electrical service,rough openings, and finishes with appropriate gyp. bd. trim.

LOCATION MAP

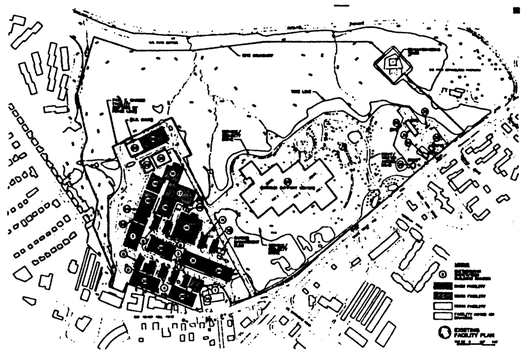

VICINITY MAP

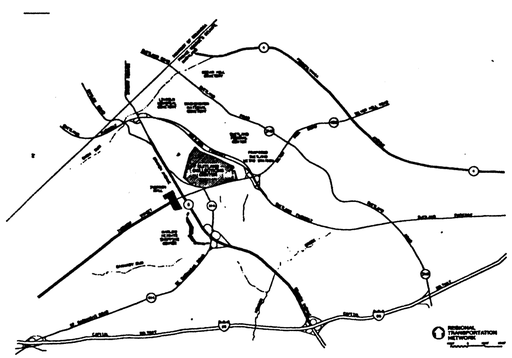

NMAI
CULTURAL RESOURCES CENTER

Architect
Polshek Metcalf Tobey and Partners Joint Venture

James Stewart Polshek and Partners
320 West 13 Street
New York, NY 10014

Metcalf Tobey and Partners
1750 Presidents Street
Reston, Virginia 22090

In Association With
Native American Design Collaborative
Louis L. Weller, President
401 Alvarado Drive S.E. - Suite D
Albuquerque, New Mexico 87108

Structural Engineer
Cagley and Associates
6141 Executive Boulevard
Rockville, Maryland 20852

MEP Engineer
Syska and Hennessy, Inc.
11 West 42 Street
New York, New York 10036

(other consultants)

Key Plan

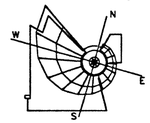

SMITHSONIAN INSTITUTION

Office of Design and Construction
955 L'Enfant Plaza, SW, Suite 3230
Washington, DC 20024

Project No.
ODC No. 912205B

Project Title
CULTURAL RESOURCES CENTER
SUITLAND, MARYLAND

Facility
NATIONAL MUSEUM OF THE AMERICAN INDIAN

Sheet Title
GENERAL NOTES AND INFORMATION
ABBREVIATIONS AND LEGEND

01 - AMENDMENT 1 THROUGH 8 9.30.96
Revisions Date

FINAL

Date Issued:	3.31.95	Sheet No.	A001
Scale:	NO SCALE		
Drawn by:			
Checked by:	WK	95 OF 420	

241A001 10-3-96 1:50:08 pm EST

THIS DIAGRAM LOCATES HORIZONTAL WORKPOINTS. WORKPOINTS INDICATE COLUMN LOCATIONS, CONTROLLING LOCATIONS FOR FACE OF SHEATHING AT TERNE COATED STAINLESS STEEL AND ALUMINUM, AND ROOF LOCATION CONTROL POINTS. VERTICAL WORKPOINTS ARE DERIVED FROM CONTINUOUS DATUM DESCRIBED ON SHEETS A320,A321,A322. SEE A337–A340 FOR TRELLIS DETAILS AND WORKPOINTS.
ALL ORTHOGONAL, RADIAL, AND SPIRAL CURVE GEOMETRIES ORIGINATE AT THE CENTER OF THE CIRCLE.

TOP OF DECK AT HIGH ROOF ALONG THIS LINE EL. +104 100

TOP OF DECK AT LOW ROOF ALONG THIS LINE EL. +103 390

℄ CONCRETE BEAM

OUTSIDE EDGE OF ROOF ALONG THIS LINE EL. +106 400

MEZZANINE COLUMN LOCATIONS ALONG THIS LINE. SEE A320–A322.

℄ OF CONCRETE COLS ON ENTRY LEVEL OFFSET 300mm

DISTANCE FROM CENTER OF CIRCLE TO CENTER OF STEEL COLUMN

TOP OF DECK ALONG THIS LINE EL. +100 100

WORKPOINT 16000 FROM CENTER

COLUMN ORIENTATION

MAIN RIB LINE

241A100 6-26-95 9:09:37 am EST

NMAI
CULTURAL RESOURCES CENTER

Architect
Polshek Metcalf Tobey and Partners Joint Venture

James Stewart Polshek and Partners
320 West 13 Street
New York, NY 10014

Metcalf Tobey and Partners
1750 Presidents Street
Reston, Virginia 22090

In Association With
Native American Design Collaborative

Louis L. Weller, President
401 Alvarado Drive S.E. – Suite D
Albuquerque, New Mexico 87108

Structural Engineer
Cagley and Associates
6141 Executive Boulevard
Rockville, Maryland 20852

MEP Engineer
Syska and Hennessy, Inc.
11 West 42 Street
New York, New York 10036

(other consultants)

Key Plan

SMITHSONIAN INSTITUTION

Office of Design and Construction
955 L'Enfant Plaza, SW, Suite 3230
Washington, DC 20024

Project No.
ODC No. 9122058

Project Title
CULTURAL RESOURCES CENTER
SUITLAND, MARYLAND

Facility
NATIONAL MUSEUM OF THE AMERICAN INDIAN

Sheet Title
CONTROLLING DIMENSIONS
STEEL LAYOUT PLAN
NOTE:
PLAN IS ROTATED 26.75°.

Revisions Date

FINAL

Date Issued:	3.31.95	Sheet No.	A100
Scale:	1 : 100		
Drawn by:			
Checked by:	WK	96 OF 420	

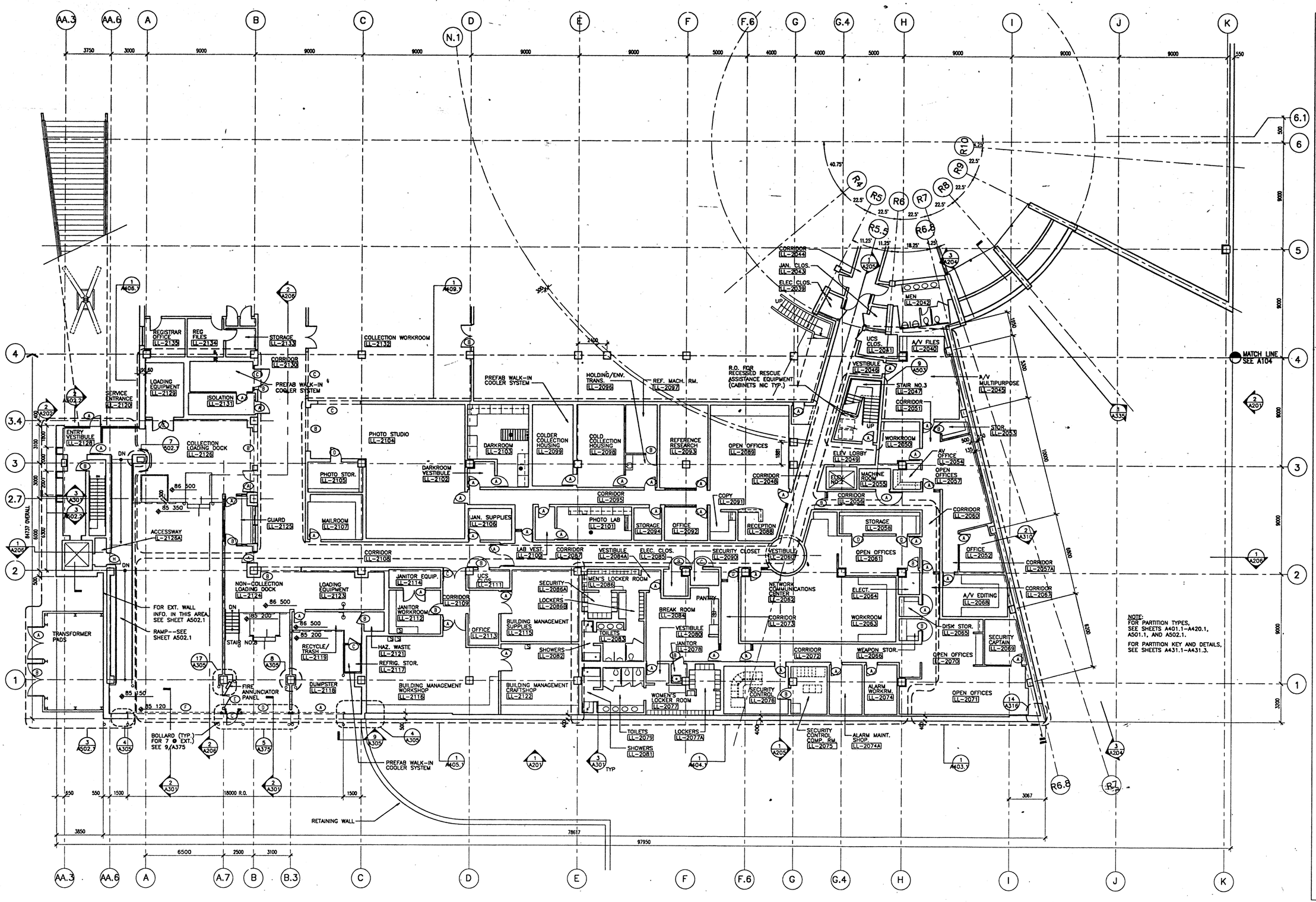

241A101 6-26-95 9:11:36 am EST

NMAI CULTURAL RESOURCES CENTER

Architect
Polshek Metcalf Tobey and Partners Joint Venture

James Stewart Polshek and Partners
320 West 13 Street
New York, NY 10014

Metcalf Tobey and Partners
1750 Presidents Street
Reston, Virginia 22090

In Association With
Native American Design Collaborative
Louis L. Weller, President
401 Alvarado Drive S.E. – Suite D
Albuquerque, New Mexico 87108

Structural Engineer
Cagley and Associates
6141 Executive Boulevard
Rockville, Maryland 20852

MEP Engineer
Syska and Hennessy, Inc.
11 West 42 Street
New York, New York 10036

(other consultants)

Key Plan

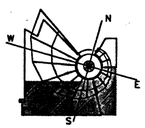

SMITHSONIAN INSTITUTION

Office of Design and Construction
955 L'Enfant Plaza, SW, Suite 3230
Washington, DC 20024

Project No.
ODC No. 912205B

Project Title
CULTURAL RESOURCES CENTER
SUITLAND, MARYLAND

Facility
NATIONAL MUSEUM OF THE AMERICAN INDIAN

Sheet Title
LOWER LEVEL PLAN – SOUTH

Revisions Date

FINAL
Date Issued: 3.31.95
Scale: 1 : 100
Drawn by:
Checked by: WK

Sheet No. A101

97 OF 420

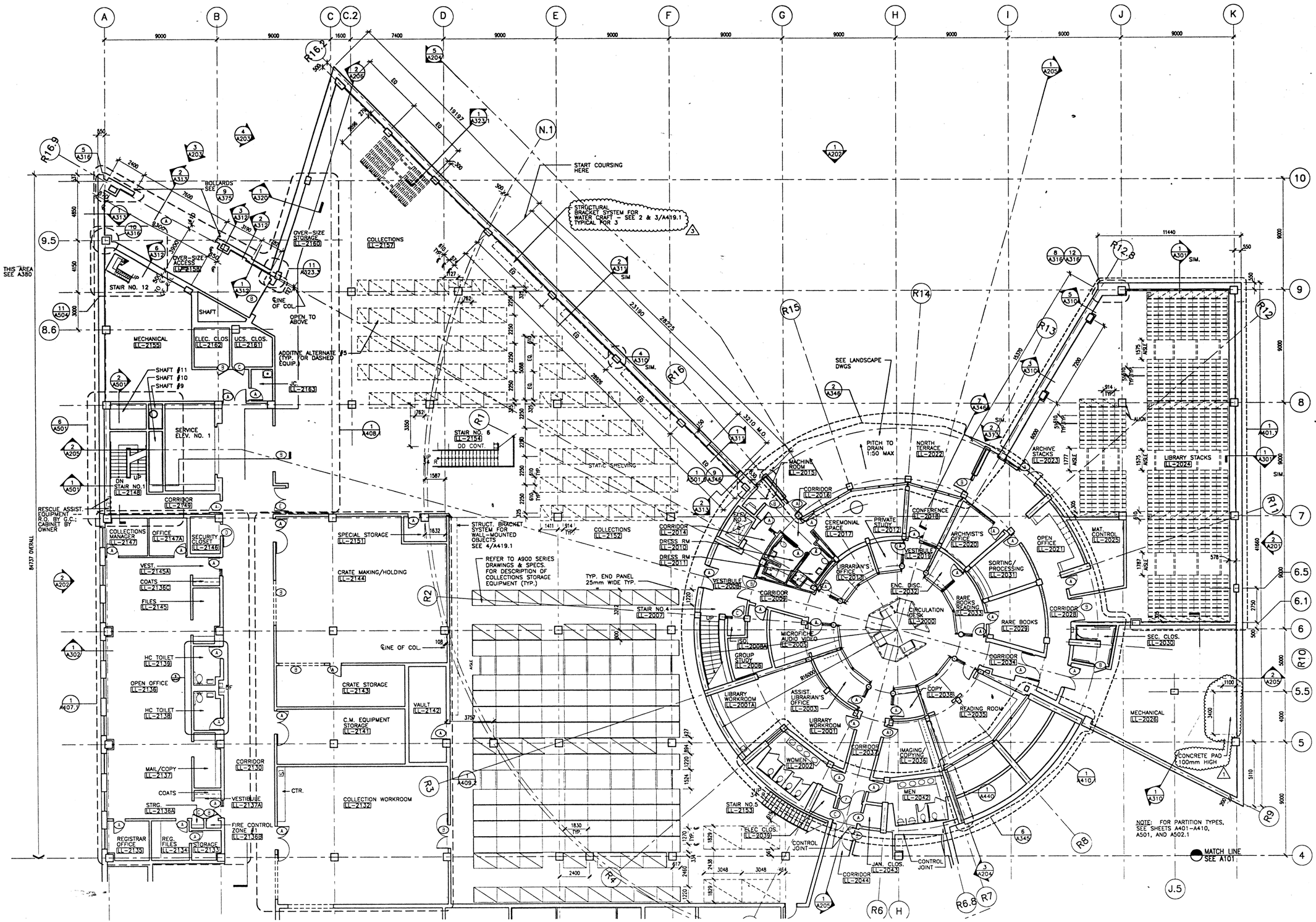

241A102 10-2-96 5:36:09 pm EST

NMAI
CULTURAL RESOURCES CENTER

Architect

Polshek Metcalf Tobey and Partners
Joint Venture

James Stewart Polshek and Partners
320 West 13 Street
New York, NY 10014

Metcalf Tobey and Partners
1750 Presidents Street
Reston, Virginia 22090

In Association With

Native American Design Collaborative
Louis L Weller, President
401 Alvarado Drive S.E. – Suite D
Albuquerque, New Mexico 87108

Structural Engineer

Cagley and Associates
6141 Executive Boulevard
Rockville, Maryland 20852

MEP Engineer

Syska and Hennessy, Inc.
11 West 42 Street
New York, New York 10036

(other consultants)

Key Plan

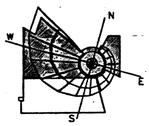

SMITHSONIAN INSTITUTION

Office of Design and Construction
955 L'Enfant Plaza, SW, Suite 3230
Washington, DC 20024

Project No.
ODC No. 9122058

Project Title
CULTURAL RESOURCES CENTER
SUITLAND, MARYLAND

Facility
NATIONAL MUSEUM OF THE AMERICAN INDIAN

Sheet Title
LOWER LEVEL PLAN – NORTH

Revisions	Date
01 – AMENDMENT 1 THROUGH 8	9.30.96

FINAL

Date Issued: 3.31.95	Sheet No. A102
Scale: 1 : 100	
Drawn by:	
Checked by: WK	98 OF 420

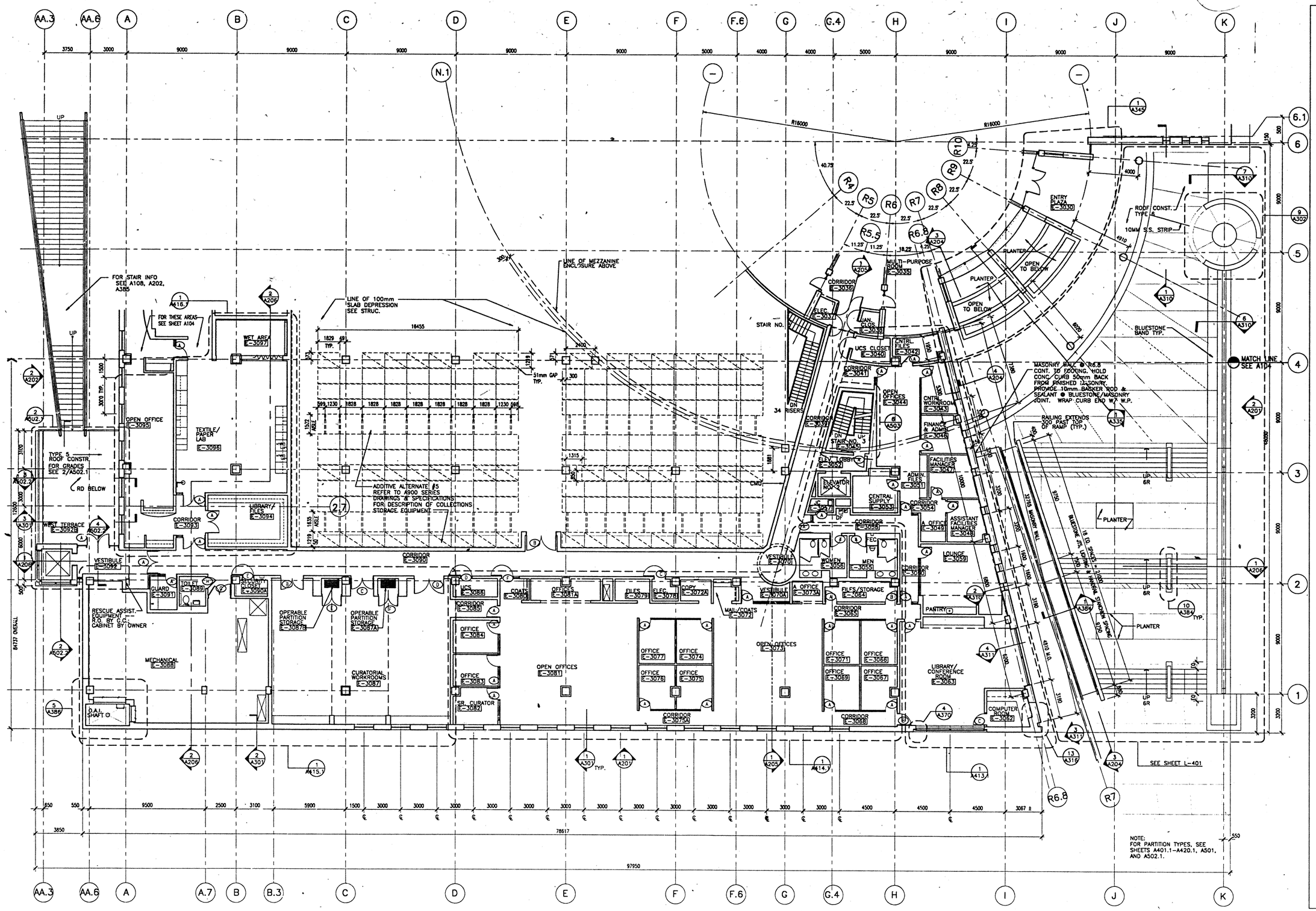

NMAI
CULTURAL RESOURCES CENTER

Architect
Polshek Metcalf Tobey and Partners Joint Venture

James Stewart Polshek and Partners
320 West 13 Street
New York, NY 10014

Metcalf Tobey and Partners
1750 Presidents Street
Reston, Virginia 22090

In Association With
Native American Design Collaborative

Louis L. Weller, President
401 Alvarado Drive S.E. – Suite D
Albuquerque, New Mexico 87108

Structural Engineer
Cagley and Associates
6141 Executive Boulevard
Rockville, Maryland 20852

MEP Engineer
Syska and Hennessy, Inc.
11 West 42 Street
New York, New York 10036

(other consultants)

Key Plan

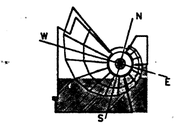

SMITHSONIAN INSTITUTION

Office of Design and Construction
955 L'Enfant Plaza, SW, Suite 3230
Washington, DC 20024

Project No.
ODC No. 912205B

Project Title
CULTURAL RESOURCES CENTER
SUITLAND, MARYLAND

Facility
NATIONAL MUSEUM OF THE AMERICAN INDIAN

Sheet Title
ENTRY LEVEL PLAN – SOUTH

Revisions	Date

FINAL

Date Issued:	3.31.95	Sheet No.	A103
Scale:	1 : 100		
Drawn by:			
Checked by:	gWK	OF	420

K:\DWGS\PROJECT\NMAI9741\241A103 6-28-95 9:13:09 am EST

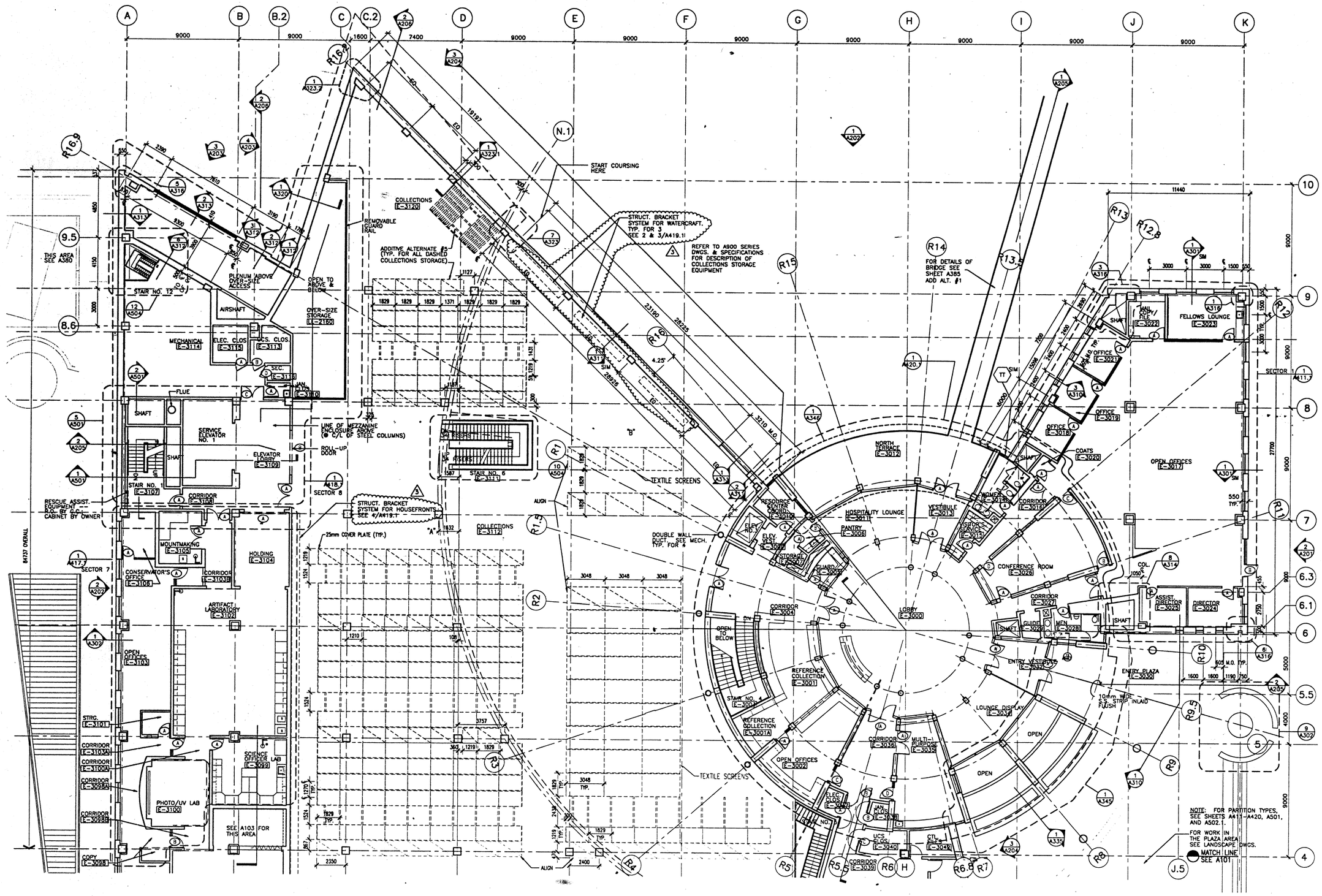

241A104 10-2-96 3:30:11 pm LS1

NMAI
CULTURAL RESOURCES CENTER

Architect

Polshek Metcalf Tobey and Partners Joint Venture

James Stewart Polshek and Partners
320 West 13 Street
New York, NY 10014

Metcalf Tobey and Partners
1750 Presidents Street
Reston, Virginia 22090

In Association With

Native American Design Collaborative
Louis L. Weller, President
401 Alvarado Drive S.E. – Suite D
Albuquerque, New Mexico 87108

Structural Engineer

Cagley and Associates
6141 Executive Boulevard
Rockville, Maryland 20852

MEP Engineer

Syska and Hennessy, Inc.
11 West 42 Street
New York, New York 10036

(other consultants)

Key Plan

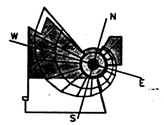

SMITHSONIAN INSTITUTION

Office of Design and Construction
955 L'Enfant Plaza, SW, Suite 3230
Washington, DC 20024

Project No.
ODC No. 912205B

Project Title
CULTURAL RESOURCES CENTER
SUITLAND, MARYLAND

Facility
NATIONAL MUSEUM OF THE AMERICAN INDIAN

Sheet Title
ENTRY LEVEL PLAN – NORTH

01 - AMENDMENT 1 THROUGH 8 9.30.96

Revisions	Date

FINAL

Date Issued:	3.31.95	Sheet No.	A104
Scale:	1 : 100		
Drawn by:			
Checked by:	WK	100 OF 420	

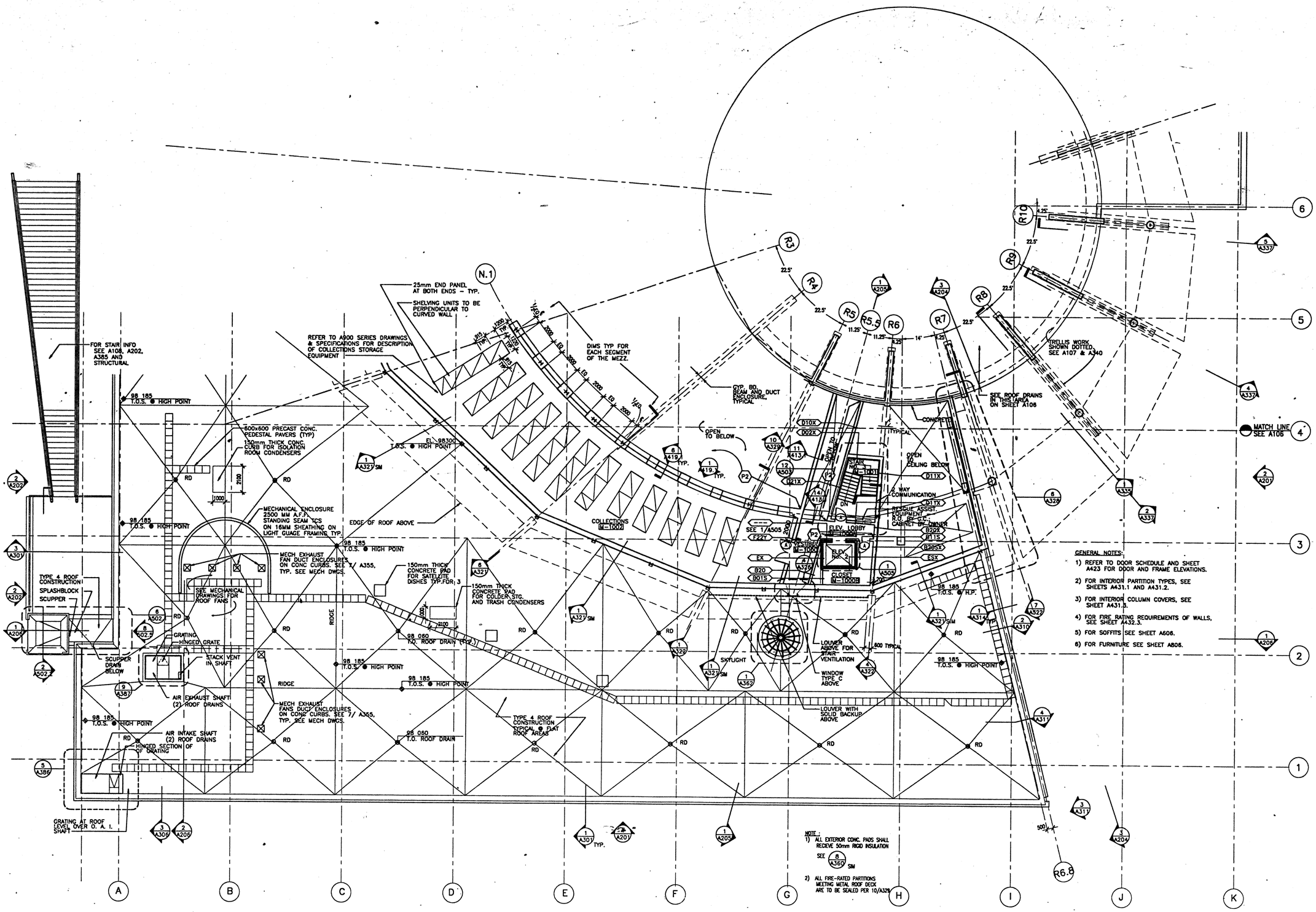

NOTE:
1) ALL EXTERIOR CONC. PADS SHALL RECIEVE 50mm RIGID INSULATION SEE 8/A360 SIM
2) ALL FIRE-RATED PARTITIONS MEETING METAL ROOF DECK ARE TO BE SEALED PER 10/A329

GENERAL NOTES:
1) REFER TO DOOR SCHEDULE AND SHEET A423 FOR DOOR AND FRAME ELEVATIONS.
2) FOR INTERIOR PARTITION TYPES, SEE SHEETS A431.1 AND A431.2.
3) FOR INTERIOR COLUMN COVERS, SEE SHEET A431.3.
4) FOR FIRE RATING REQUIREMENTS OF WALLS, SEE SHEET A432.3.
5) FOR SOFFITS SEE SHEET A606.
6) FOR FURNITURE SEE SHEET A806.

241A105 6-26-95 9:18:26 am EST

NMAI
CULTURAL RESOURCES CENTER

Architect
Polshek Metcalf Tobey and Partners Joint Venture
James Stewart Polshek and Partners
320 West 13 Street
New York, NY 10014
Metcalf Tobey and Partners
1750 Presidents Street
Reston, Virginia 22090

In Association With
Native American Design Collaborative
Louis L. Weller, President
401 Alvarado Drive S.E. – Suite D
Albuquerque, New Mexico 87108

Structural Engineer
Cagley and Associates
6141 Executive Boulevard
Rockville, Maryland 20852

MEP Engineer
Syska and Hennessy, Inc.
11 West 42 Street
New York, New York 10036

(other consultants)

Key Plan

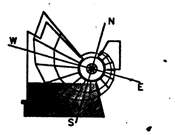

SMITHSONIAN INSTITUTION

Office of Design and Construction
955 L'Enfant Plaza, SW, Suite 3230
Washington, DC 20024

Project No.
ODC No. 912205B

Project Title
CULTURAL RESOURCES CENTER
SUITLAND, MARYLAND

Facility
NATIONAL MUSEUM OF THE AMERICAN INDIAN

Sheet Title
MEZZANINE LEVEL PLAN – SOUTH

Revisions Date

FINAL

Date Issued:	3.31.95	Sheet No.	A105
Scale:	1 : 100		
Drawn by:			
Checked by:	WK	101 OF 420	

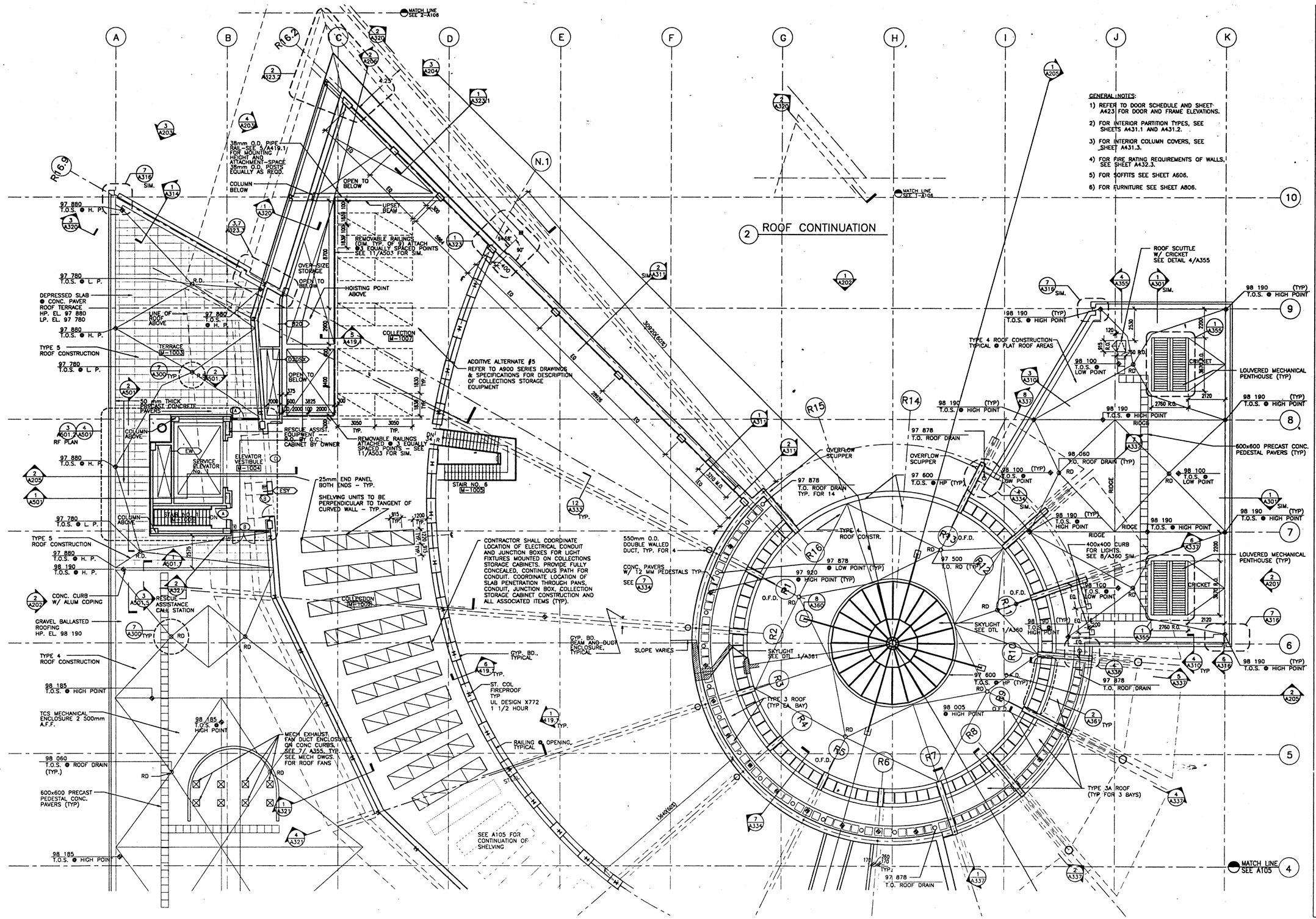

241A106 6-26-95 9:19:30 am EST

NMAI
CULTURAL RESOURCES CENTER

Architect
Polshek Metcalf Tobey and Partners Joint Venture

James Stewart Polshek and Partners
320 West 13 Street
New York, NY 10014

Metcalf Tobey and Partners
1750 Presidents Street
Reston, Virginia 22090

In Association With
Native American Design Collaborative

Louis L. Weller, President
401 Alvarado Drive S.E. – Suite D
Albuquerque, New Mexico 87108

Structural Engineer
Cagley and Associates
6141 Executive Boulevard
Rockville, Maryland 20852

MEP Engineer
Syska and Hennessy, Inc.
11 West 42 Street
New York, New York 10036

(other consultants)

Key Plan

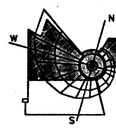

SMITHSONIAN INSTITUTION

Office of Design and Construction
955 L'Enfant Plaza, SW, Suite 3230
Washington, DC 20024

Project No.
ODC No. 912205B

Project Title
CULTURAL RESOURCES CENTER
SUITLAND, MARYLAND

Facility
NATIONAL MUSEUM OF THE AMERICAN INDIAN

Sheet Title
MEZZANINE LEVEL PLAN – NORTH

Revisions	Date

FINAL

Date Issued:	3.31.95	Sheet No.	A106
Scale:	1 : 100		
Drawn by:			
Checked by:	WK	102 OF 420	

ROOF TYPE – 1

ROOF TYPE – 2

LINE OF BUILDING EDGE BELOW

WORKPOINT (OR) 16000 FROM CENTER

MOCK–UP #5 ALSO SEE 5/A340

EXTERNAL STL. FRAME

SKYLIGHT SEE DTL 1/A360

SKYLIGHT SEE DTL 1/A361

FOR ROOF CONSTRUCTION, ROOF DRAINS, AND PAVERS IN THIS AREA, SEE A108

SLOPE VARIES

℄ OF EXPANSION BATTEN (TYP. ● ALL BATTENS)

EXPANSION BATTEN TYP.

COPPER PAN PATTERN (FOR GRAPHIC INFORMATION ONLY)

GUTTER (TYP.)

EXTENT OF GUTTER LINING (TYP.)

RIB (TYP.)

REMOVABLE PANEL (TYP.) SEE 4/A333

FLAT SEAM COPPER ROOFING

LIGHT FIXTURES SEE SHT. E–109.

TRELLIS CONSTRUCTION BETWEEN RIBS 7 THRU 13

NOTE: SEE SRUCTURAL DWG.S FOR STEEL TRUSSES, SIZES AND CONNECTIONS

TRUSS MEMBER SEE A340 FOR GEOMETRY TYP.

HORIZ. TRELLIS MEMBERS NOT SHOWN FOR CLARITY

EQ. 1 DIMENSIONS ARE CIRCUMFERENTIAL ALONG 0% ARC

2 TYP. TRUSS LAYOUT
SCALE 1 : 50

GENERAL NOTES

1. FOR ROOF TYPE DETAILS, SEE A300
2. FOR SERVICE ELEVATOR NO.1 – UPPER AND LOWER PENTHOUSE ROOF PLANS – SEE 3/A501.2

NMAI
CULTURAL RESOURCES CENTER

Architect

Polshek Metcalf Tobey and Partners Joint Venture

James Stewart Polshek and Partners
320 West 13 Street
New York, NY 10014

Metcalf Tobey and Partners
1750 Presidents Street
Reston, Virginia 22090

In Association With

Native American Design Collaborative

Louis L. Weller, President
401 Alvarado Drive S.E. – Suite D
Albuquerque, New Mexico 87108

Structural Engineer

Cagley and Associates
6141 Executive Boulevard
Rockville, Maryland 20852

MEP Engineer

Syska and Hennessy, Inc.
11 West 42 Street
New York, New York 10036

(other consultants)

Key Plan

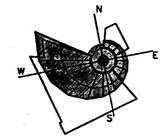

SMITHSONIAN INSTITUTION

Office of Design and Construction
955 L'Enfant Plaza, SW, Suite 3230
Washington, DC 20024

Project No.
ODC No. 912205B

Project Title
CULTURAL RESOURCES CENTER
SUITLAND, MARYLAND

Facility
NATIONAL MUSEUM OF THE AMERICAN INDIAN

Sheet Title
ROOF PLAN

PLAN IS ROTATED 26.75°

Revisions	Date

FINAL

Date Issued: 3.31.95	Sheet No. A107
Scale: 1 : 100	
Drawn by:	
Checked by: WK	103 OF 420

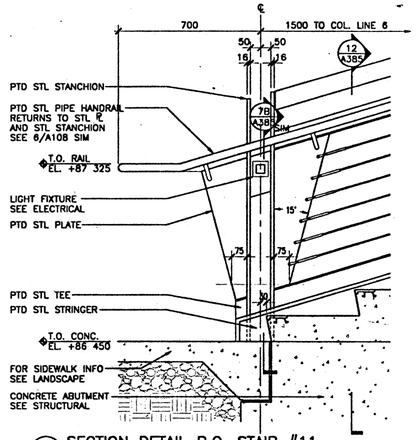

4 SECTION DETAIL B.O. STAIR #11
SCALE 1 : 10

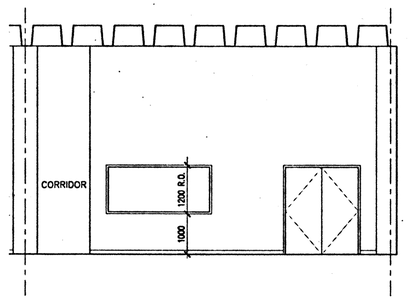

3 ENGINEER'S OFF. EXTERIOR ELEVATION
SCALE 1 : 50 B-1009 LOOKING SOUTH

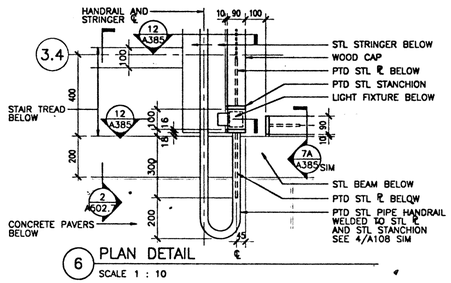

6 PLAN DETAIL
SCALE 1 : 10

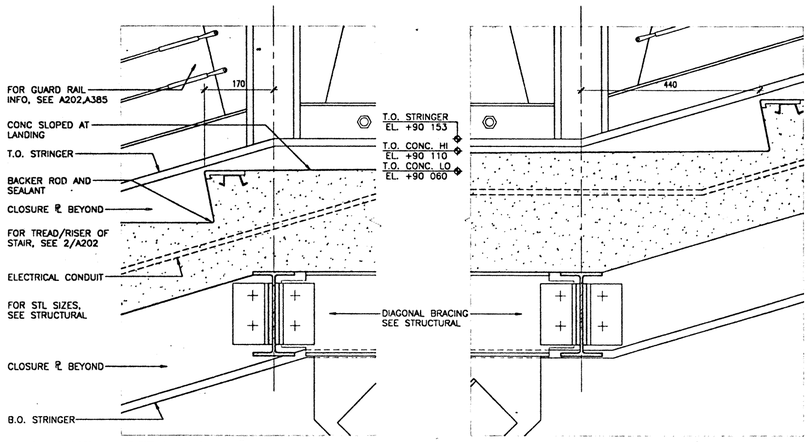

8 SECTION DETAIL STAIR #11
SCALE 1 : 5 AT LANDING

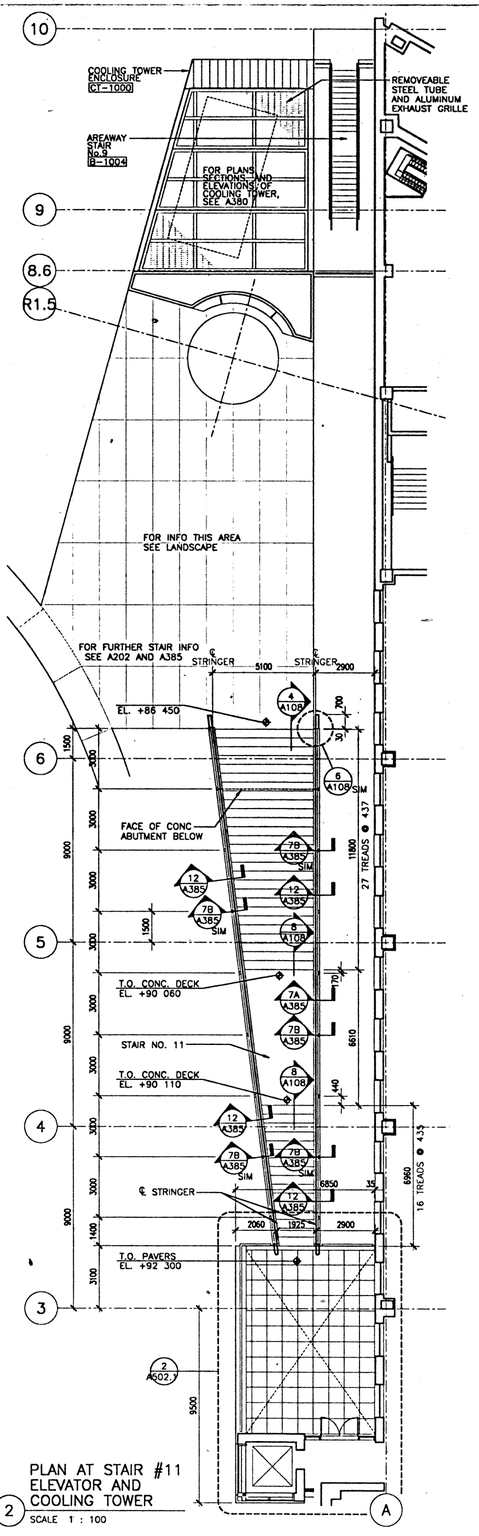

2 PLAN AT STAIR #11 ELEVATOR AND COOLING TOWER
SCALE 1 : 100

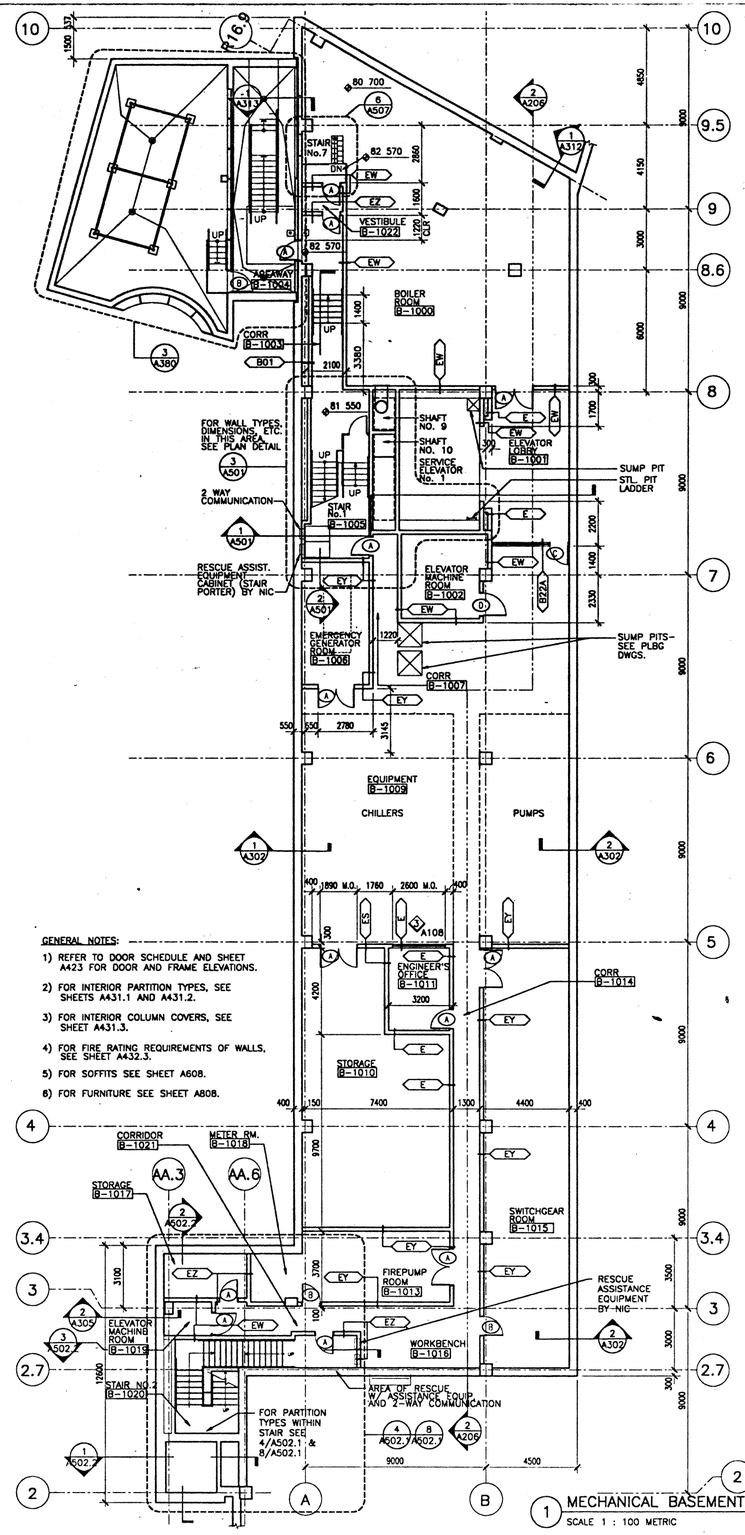

1 MECHANICAL BASEMENT PLAN
SCALE 1 : 100 METRIC

GENERAL NOTES:

1) REFER TO DOOR SCHEDULE AND SHEET A423 FOR DOOR AND FRAME ELEVATIONS.
2) FOR INTERIOR PARTITION TYPES, SEE SHEETS A431.1 AND A431.2.
3) FOR INTERIOR COLUMN COVERS, SEE SHEET A431.3.
4) FOR FIRE RATING REQUIREMENTS OF WALLS, SEE SHEET A432.3.
5) FOR SOFFITS SEE SHEET A608.
6) FOR FURNITURE SEE SHEET A808.

NMAI
CULTURAL RESOURCES CENTER

Architect
Polshek Metcalf Tobey and Partners Joint Venture
James Stewart Polshek and Partners
320 West 13 Street
New York, NY 10014

Metcalf Tobey and Partners
1750 Presidents Street
Reston, Virginia 22090

In Association With
Native American Design Collaborative
Louis L. Weller, President
401 Alvarado Drive S.E. - Suite C
Albuquerque, New Mexico 87108

Structural Engineer
Cagley and Associates
6141 Executive Boulevard
Rockville, Maryland 20852

MEP Engineer
Syska and Hennessy, Inc.
11 West 42 Street
New York, New York 10036

(other consultants)

Key Plan

SMITHSONIAN INSTITUTION

Office of Design and Construction
955 L'Enfant Plaza, SW, Suite 3200
Washington, DC 20024

Project No.
ODC No. 912205B

Project Title
CULTURAL RESOURCES CENTER
SUITLAND, MARYLAND

Facility
NATIONAL MUSEUM OF THE AMERICAN INDIAN

Sheet Title
MISCELLANEOUS PART PLANS
STAIR NO.11

Revisions

FINAL

Date issued:	3.31.95	Sheet No.
Scale:	AS NOTED	A108
Drawn by:	AC	
Checked by:	WK	104 OF 420

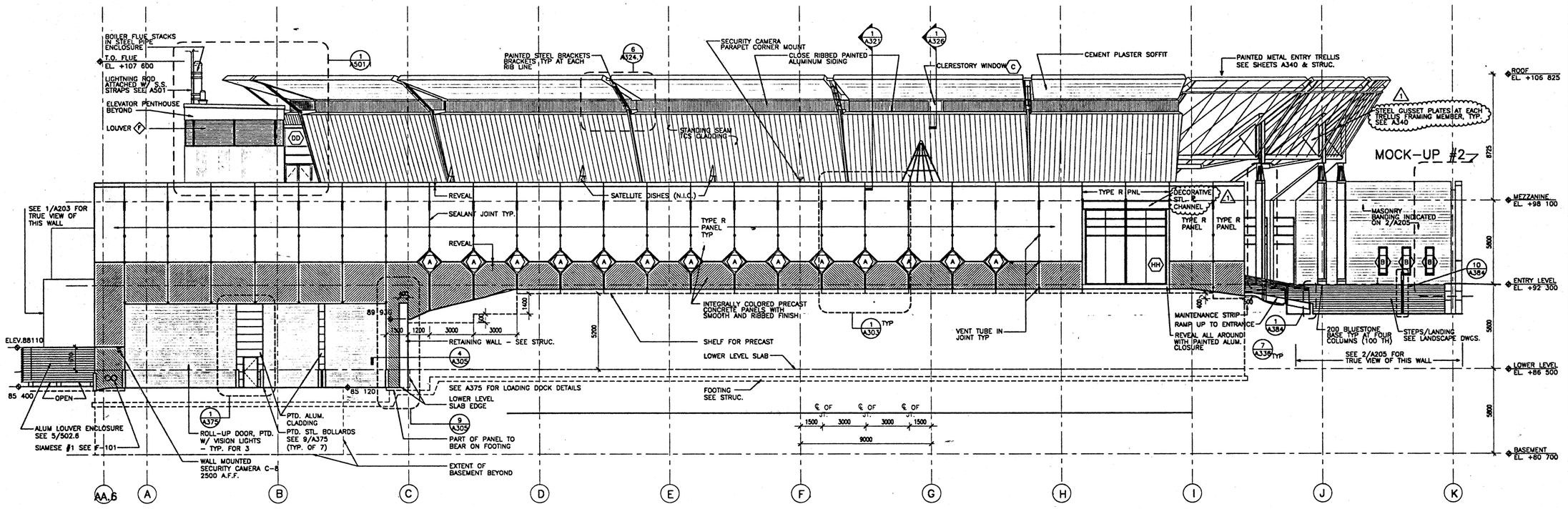

1 SOUTH ELEVATION
SCALE 1 : 100

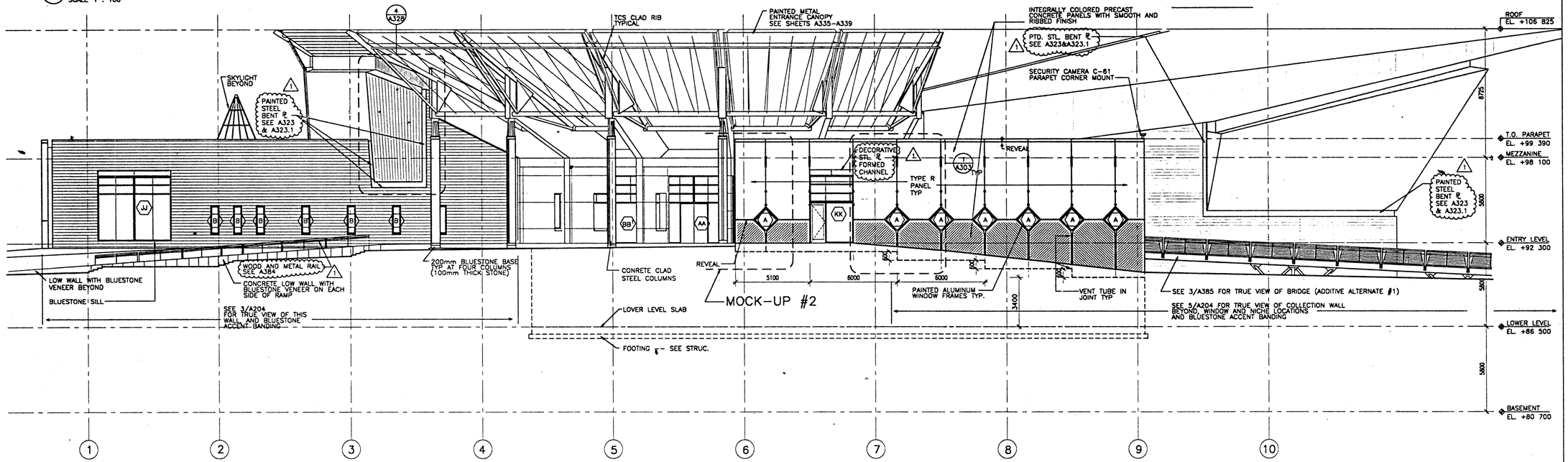

2 EAST ELEVATION
SCALE 1 : 100

NMAI
CULTURAL RESOURCES CENTER

Architect
Polshek Metcalf Tobey and Partners Joint Venture

James Stewart Polshek and Partners
320 West 13 Street
New York, NY 10014

Metcalf Tobey and Partners
1750 Presidents Street
Reston, Virginia 22090

In Association With
Native American Design Collaborative
Louis L. Weller, President
401 Alvarado Drive S.E. - Suite D
Albuquerque, New Mexico 87108

Structural Engineer
Cagley and Associates
6141 Executive Boulevard
Rockville, Maryland 20852

MEP Engineer
Syska and Hennessy, Inc.
11 West 42 Street
New York, New York 10036

(other consultants)

Key Plan

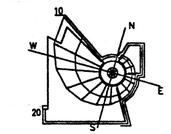

SMITHSONIAN INSTITUTION

Office of Design and Construction
955 L'Enfant Plaza, SW, Suite 3230
Washington, DC 20024

Project No.
ODC No. 912205B

Project Title
CULTURAL RESOURCES CENTER
SUITLAND, MARYLAND

Facility
NATIONAL MUSEUM OF THE AMERICAN INDIAN

Sheet Title
SOUTH ELEVATION
EAST ELEVATION

01 - AMENDMENT 1 THROUGH 8 9.30.96
Revisions Date

FINAL

Date Issued:	3.31.95	Sheet No.	A201
Scale:	1 : 100		
Drawn by:			
Checked by:	WK	105 OF 420	

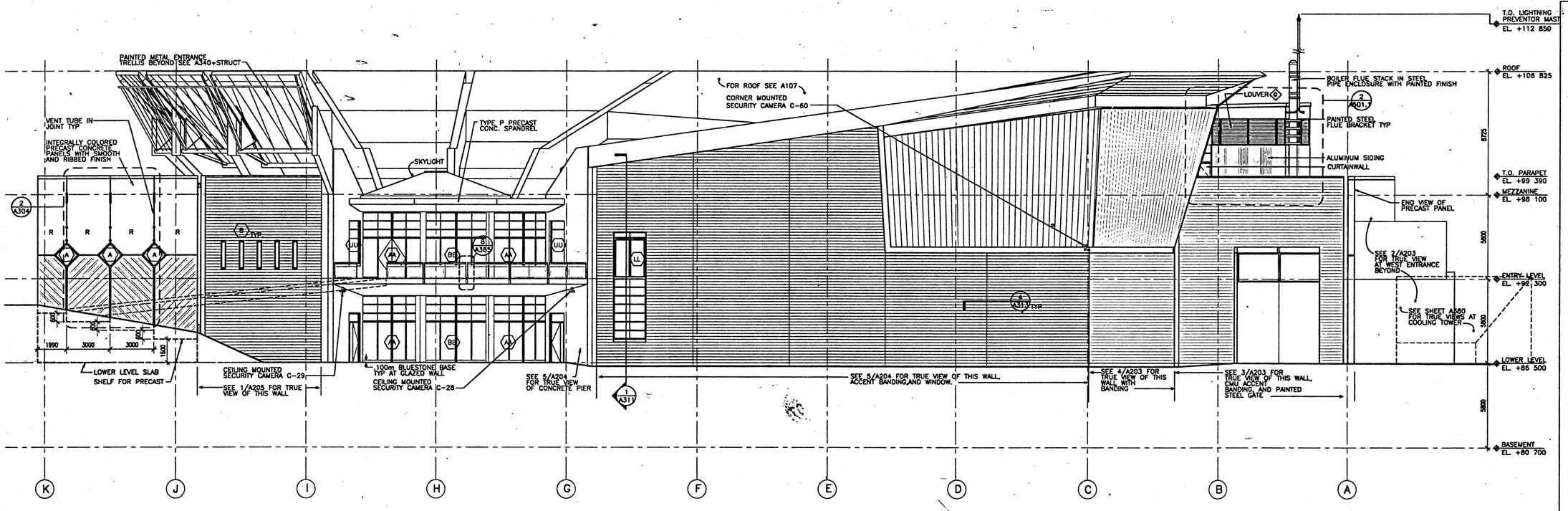

1 NORTH ELEVATION
SCALE 1 : 100

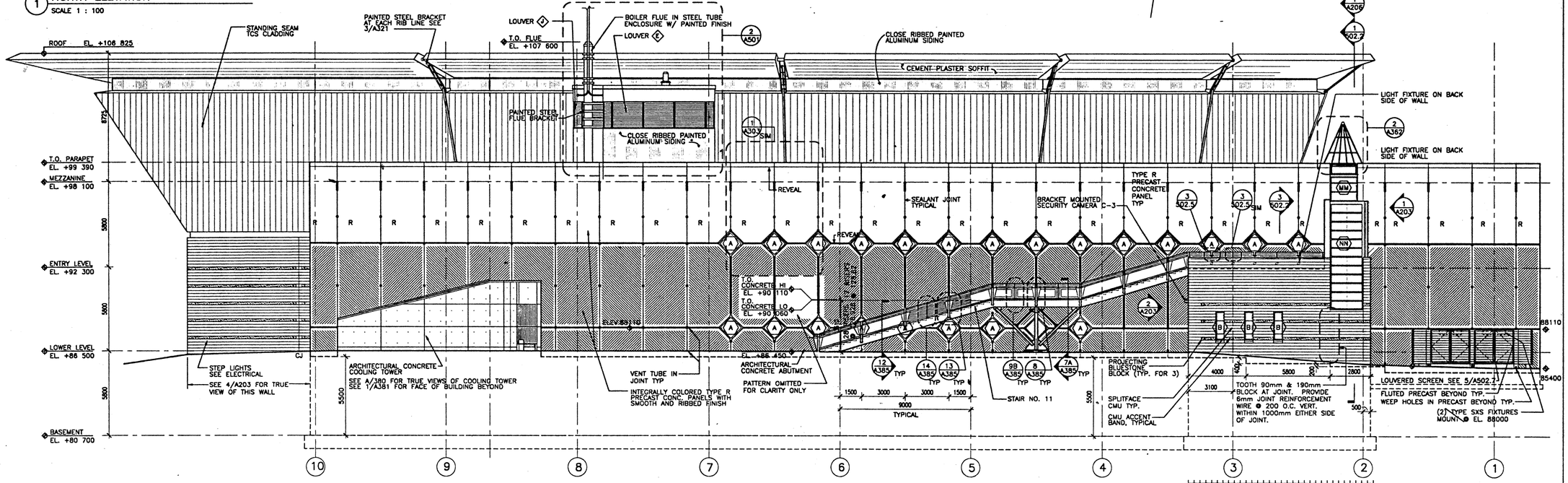

2 WEST ELEVATION
SCALE 1 : 100

NMAI
CULTURAL RESOURCES CENTER

Architect
Polshek Metcalf Tobey and Partners Joint Venture

James Stewart Polshek and Partners
320 West 13 Street
New York, NY 10014

Metcalf Tobey and Partners
1750 Presidents Street
Reston, Virginia 22090

In Association With
Native American Design Collaborative

Louis L. Weller, President
401 Alvarado Drive S.E. – Suite D
Albuquerque, New Mexico 87108

Structural Engineer
Cagley and Associates
6141 Executive Boulevard
Rockville, Maryland 20852

MEP Engineer
Syska and Hennessy, Inc.
11 West 42 Street
New York, New York 10036

(other consultants)

Key Plan

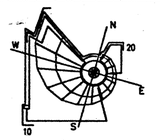

SMITHSONIAN INSTITUTION

Office of Design and Construction
955 L'Enfant Plaza, SW, Suite 3230
Washington, DC 20024

Project No.
ODC No. 912205B

Project Title
CULTURAL RESOURCES CENTER
SUITLAND, MARYLAND

Facility
NATIONAL MUSEUM OF THE AMERICAN INDIAN

Sheet Title
NORTH ELEVATION
WEST ELEVATION

Revisions Date

FINAL

Date Issued:	3.31.95	Sheet No.	A202
Scale:	1 : 100		
Drawn by:			
Checked by:	WK	106 OF 420	

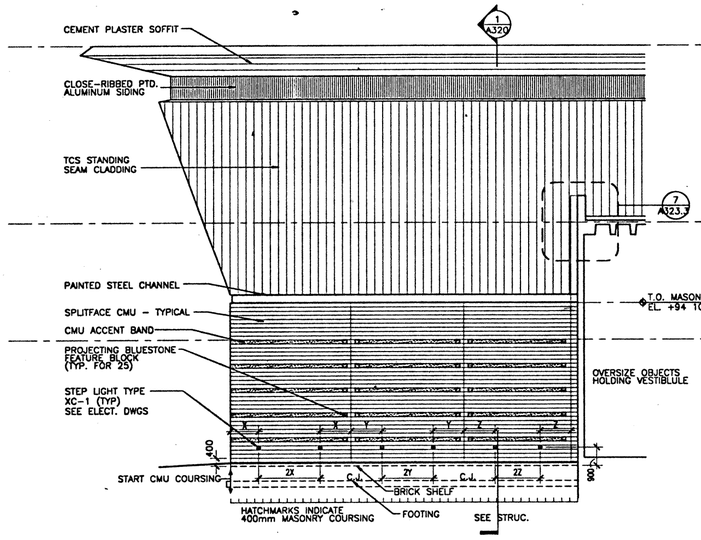

4 PARTIAL ELEVATION
SCALE 1 : 100 COLLECTION HALL

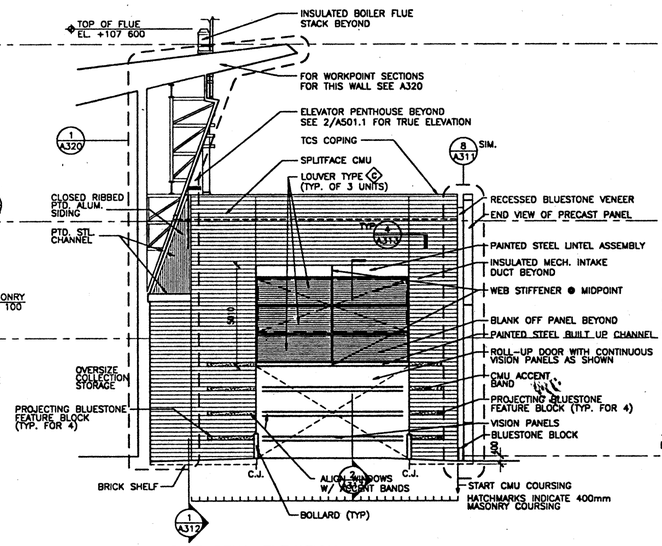

3 PARTIAL ELEVATION
SCALE 1 : 100 OVERSIZE ACCESS

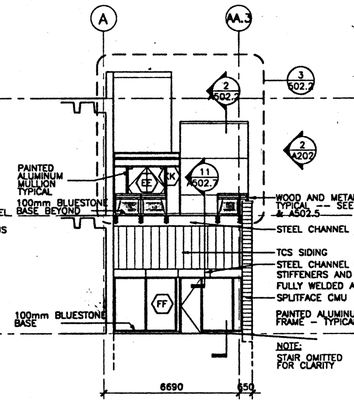

2 PARTIAL ELEVATION
SCALE 1 : 100 STAIR LANDING/ELEVATOR – NORTH

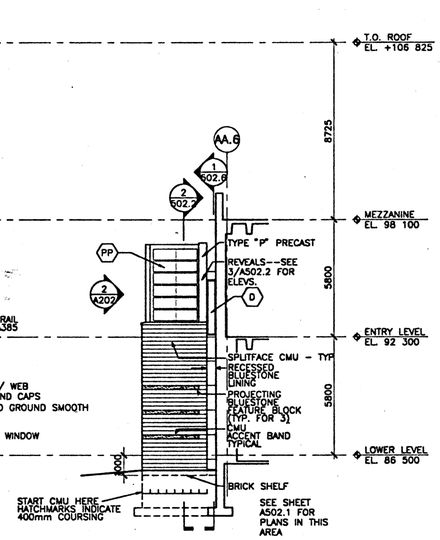

1 PARTIAL ELEVATION
SCALE 1 : 100 STAIR LANDING/ELEVATOR – SOUTH

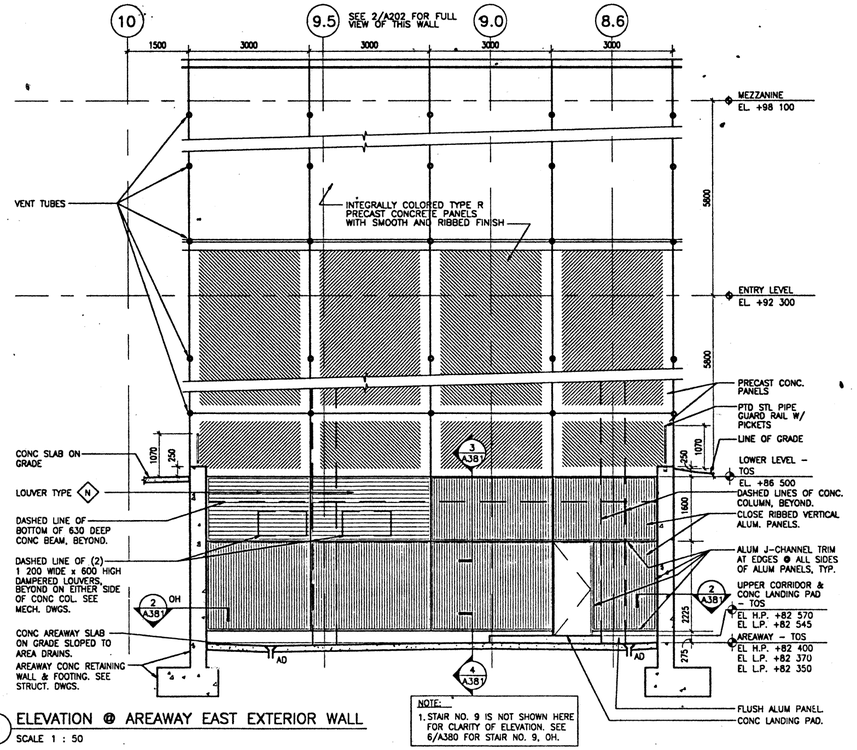

5 ELEVATION @ AREAWAY EAST EXTERIOR WALL
SCALE 1 : 50

NMAI
CULTURAL RESOURCES CENTER

Architect
Polshek Metcalf Tobey and Partners Joint Venture
James Stewart Polshek and Partners
320 West 13 Street
New York, NY 10014
Metcalf Tobey and Partners
1750 Presidents Street
Reston, Virginia 22090
In Association With
Native American Design Collaborative
Louis L. Weller, President
401 Alvarado Drive S.E. – Suite D
Albuquerque, New Mexico 87108
Structural Engineer
Cagley and Associates
6141 Executive Boulevard
Rockville, Maryland 20852
MEP Engineer
Syska and Hennessy, Inc.
11 West 42 Street
New York, New York 10036
(other consultants)

Key Plan

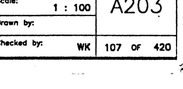

SMITHSONIAN INSTITUTION

Office of Design and Construction
955 L'Enfant Plaza, SW, Suite 3230
Washington, DC 20024

Project No.
ODC No. 9122058

Project Title
CULTURAL RESOURCES CENTER
SUITLAND, MARYLAND

Facility
NATIONAL MUSEUM OF THE AMERICAN INDIAN

Sheet Title
PARTIAL ELEVATIONS

Revisions Date

FINAL

Date Issued:	3.31.95	Sheet No.	A203
Scale:	1 : 100		
Drawn by:			
Checked by:	WK	107 OF 420	

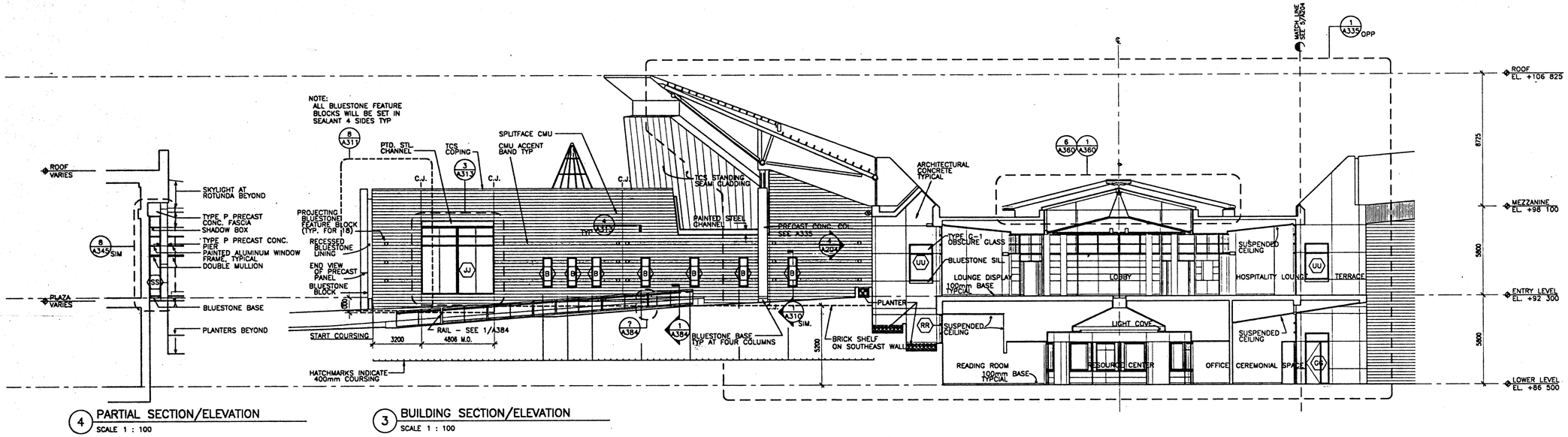

4 PARTIAL SECTION/ELEVATION
SCALE 1 : 100

3 BUILDING SECTION/ELEVATION
SCALE 1 : 100

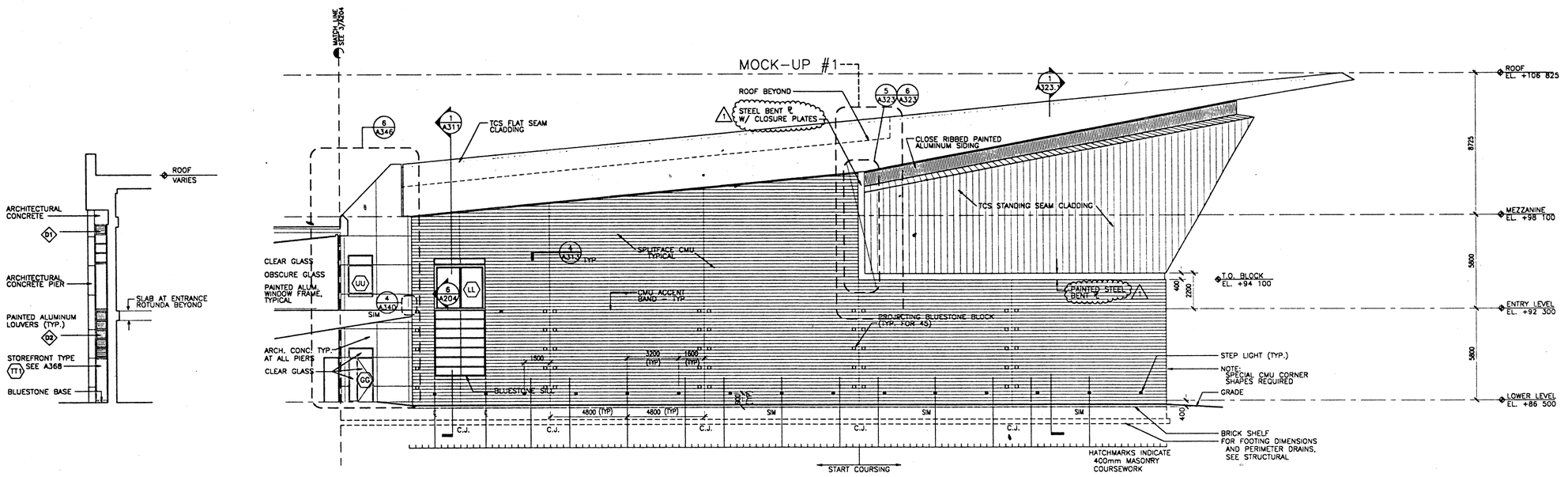

6 PARTIAL SECTION/ELEVATION
SCALE 1 : 100 ● RIB 16

5 BUILDING SECTION/ELEVATION
SCALE 1 : 100

NMAI
CULTURAL RESOURCES CENTER

Architect
Polshek Metcalf Tobey and Partners
Joint Venture

James Stewart Polshek and Partners
320 West 13 Street
New York, NY 10014

Metcalf Tobey and Partners
1750 Presidents Street
Reston, Virginia 22090

In Association With
Native American Design Collaborative
Louis L. Weller, President
401 Alvarado Drive S.E. - Suite D
Albuquerque, New Mexico 87108

Structural Engineer
Cagley and Associates
6141 Executive Boulevard
Rockville, Maryland 20852

MEP Engineer
Syska and Hennessy, Inc.
11 West 42 Street
New York, New York 10036

(other consultants)

Key Plan

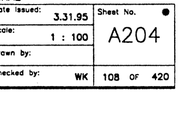

SMITHSONIAN INSTITUTION

Office of Design and Construction
955 L'Enfant Plaza, SW, Suite 3230
Washington, DC 20024

Project No.
ODC No. 912205B

Project Title
CULTURAL RESOURCES CENTER
SUITLAND, MARYLAND

Facility
NATIONAL MUSEUM OF THE AMERICAN INDIAN

Sheet Title
BUILDING SECTION/ELEVATION

01 - AMENDMENT/1 THROUGH/8 9.30.96
Revisions Date

FINAL

Date Issued: 3.31.95	Sheet No. ●
Scale: 1 : 100	A204
Drawn by:	
Checked by: WK	108 OF 420

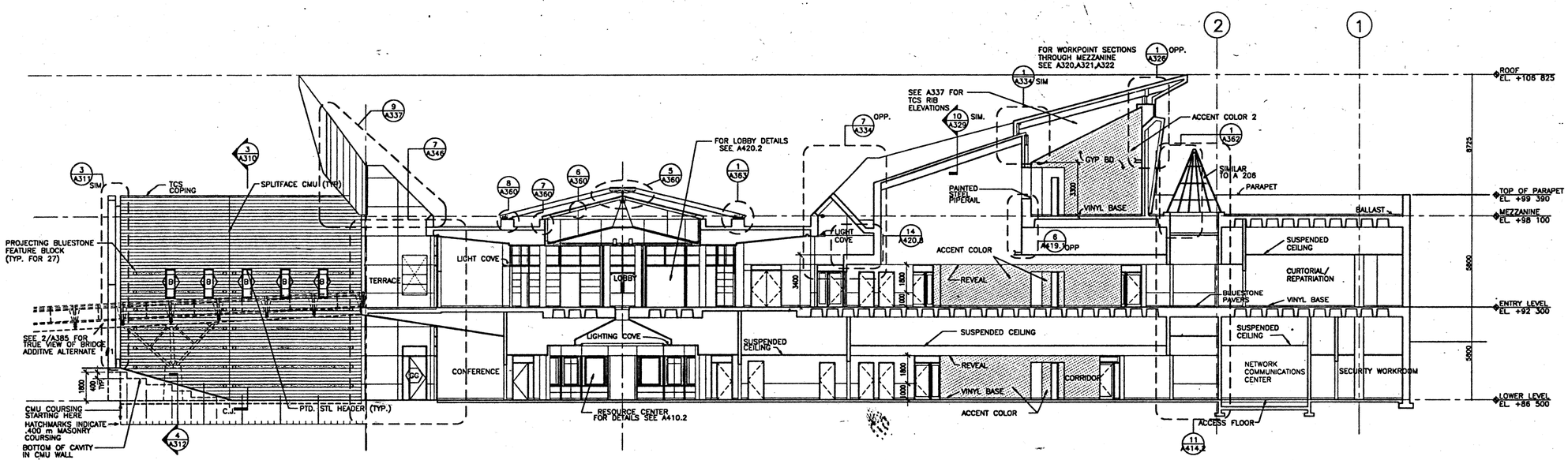

1 BUILDING SECTION
SCALE 1 : 100

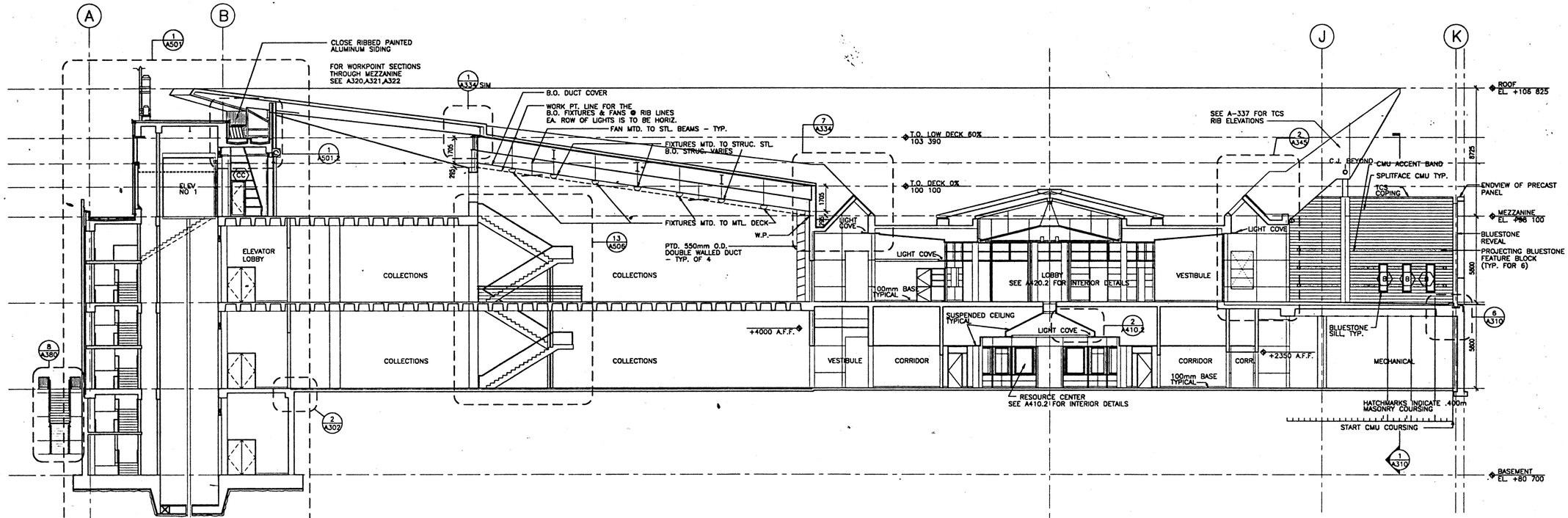

2 BUILDING SECTION
SCALE 1 : 100

241A205 6-22-95 8:06:33 pm EST

NMAI
CULTURAL RESOURCES CENTER

Architect
Polshek Metcalf Tobey and Partners Joint Venture

James Stewart Polshek and Partners
320 West 13 Street
New York, NY 10014

Metcalf Tobey and Partners
1750 Presidents Street
Reston, Virginia 22090

In Association With
Native American Design Collaborative
Louis L. Weller, President
401 Alvarado Drive S.E. - Suite D
Albuquerque, New Mexico 87108

Structural Engineer
Cagley and Associates
6141 Executive Boulevard
Rockville, Maryland 20852

MEP Engineer
Syska and Hennessy, Inc.
11 West 42 Street
New York, New York 10036

(other consultants)

Key Plan

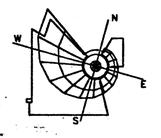

SMITHSONIAN INSTITUTION

Office of Design and Construction
955 L'Enfant Plaza, SW, Suite 3230
Washington, DC 20024

Project No.
ODC No. 912205B

Project Title
CULTURAL RESOURCES CENTER
SUITLAND, MARYLAND

Facility
NATIONAL MUSEUM OF THE AMERICAN INDIAN

Sheet Title
BUILDING SECTIONS

Revisions — Date

FINAL

Date Issued: 3.31.95	Sheet No. A205
Scale: 1 : 100	
Drawn by:	
Checked by: WK	109 OF 420

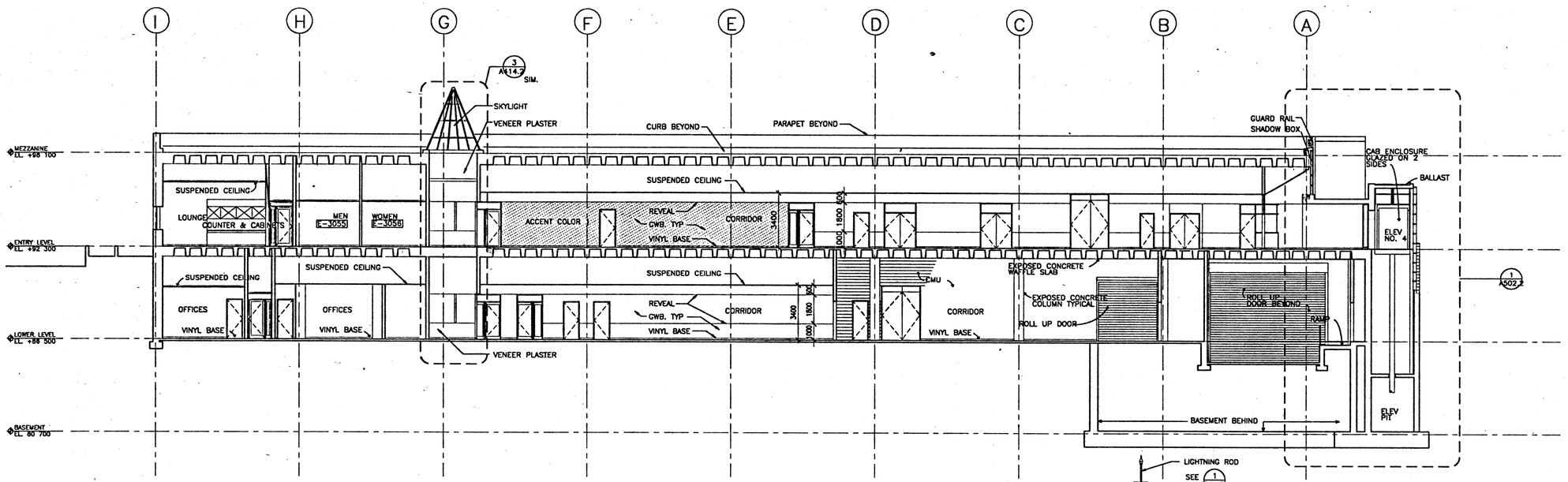

1 BUILDING SECTION
SCALE 1 : 100 LOOKING SOUTH

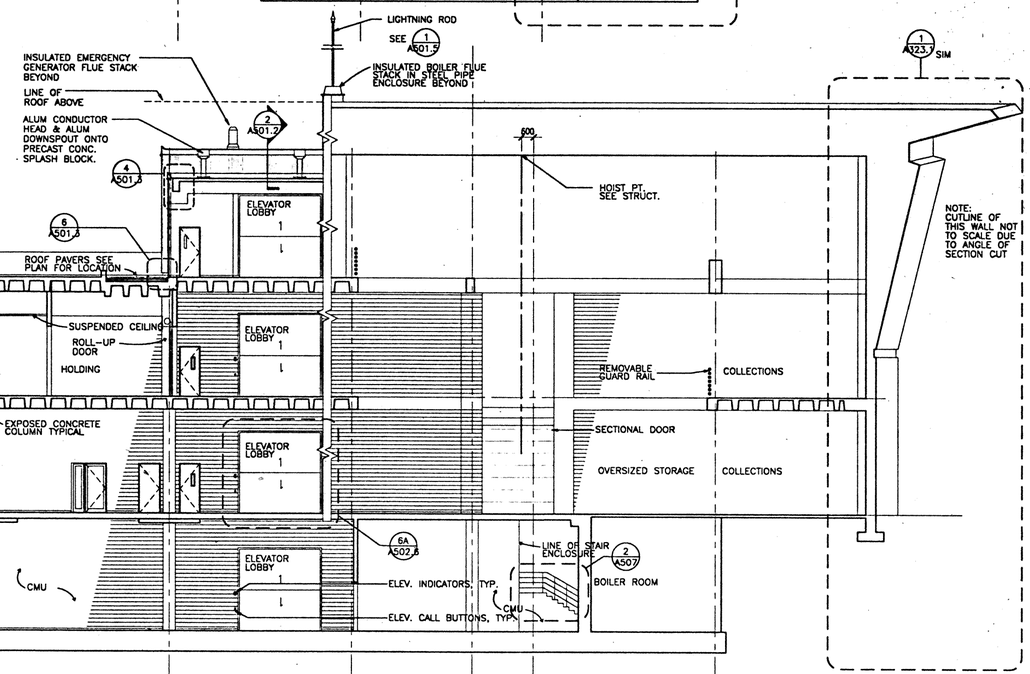

2 BUILDING SECTION
SCALE 1 : 100 LOOKING WEST

24\A206 4-3-95 9:28:54 am EST

NMAI
CULTURAL RESOURCES CENTER

Architect
Polshek Metcalf Tobey and Partners Joint Venture

James Stewart Polshek and Partners
320 West 13 Street
New York, NY 10014

Metcalf Tobey and Partners
1750 Presidents Street
Reston, Virginia 22090

In Association With
Native American Design Collaborative

Louis L. Weller, President
401 Alvarado Drive S.E. – Suite D
Albuquerque, New Mexico 87108

Structural Engineer
Cagley and Associates
6141 Executive Boulevard
Rockville, Maryland 20852

MEP Engineer
Syska and Hennessy, Inc.
11 West 42 Street
New York, New York 10036

(other consultants)

Key Plan

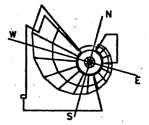

SMITHSONIAN INSTITUTION

Office of Design and Construction
955 L'Enfant Plaza, SW, Suite 3230
Washington, DC 20024

Project No.
ODC No. 912205B

Project Title
CULTURAL RESOURCES CENTER
SUITLAND, MARYLAND

Facility
NATIONAL MUSEUM OF THE AMERICAN INDIAN

Sheet Title
BUILDING SECTIONS

Revisions Date

FINAL

Date issued: 3.31.95	Sheet No. A206
Scale: 1 : 100	
Drawn by:	
Checked by: WK	110 OF 420

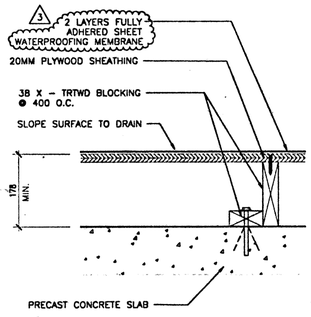

3A TYPE 3A: CONC. GUTTER ROOF
SCALE 1 : 5 NON–INSULATED

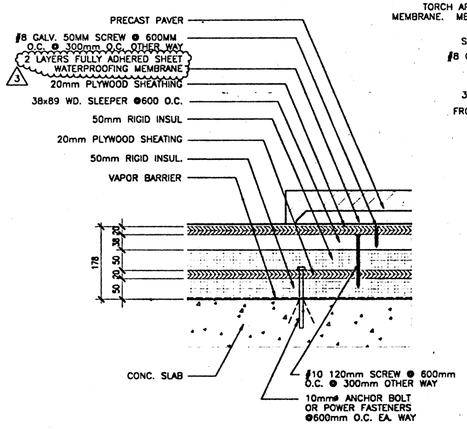

3 TYPE 3: CONC. GUTTER ROOF
SCALE 1 : 5 SINGLE PLY ON CONC. SLAB

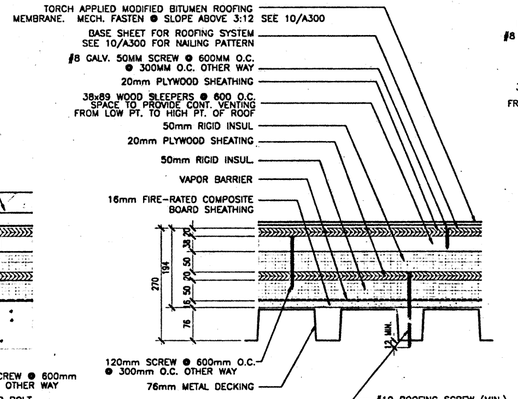

2 TYPE 2: BITUMEN ROOF
SCALE 1 : 5 TORCH APPLIED MODIFIED BITUMEN

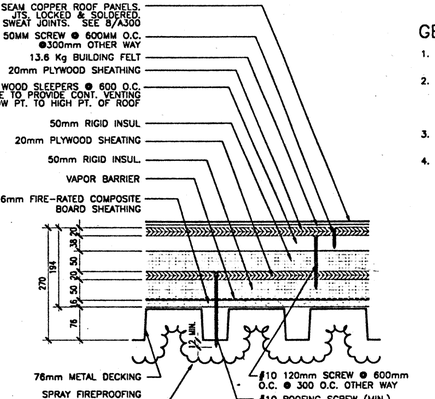

1 TYPE 1: FLAT SEAM COPPER ROOF
SCALE 1 : 5

GENERAL NOTES: ROOFING

1. ALL LUMBER OUTBOARD OF VAPOR BARRIER SHALL BE PRESSURE– AND FIRE–RETARDANT TREATED.
2. FOR ALL MEMBRANE ROOFS AND GUTTER LINERS APPLIED TO PLYWOOD, ALL FASTENERS FOR PLYWOOD SHALL BE COUNTERSUNK. TAPE ALL JOINTS IN PLYWOOD. ALL SURFACES OF SUBSTRATE TO BE FLUSH AND SMOOTH, AND FREE OF DAMAGE PER ROOFER'S REQUIRMENTS
3. PROVIDE ONE FASTENER AT EACH CORNER OF EACH PLYWOOD SHEET MINIMUM, TYP.
4. NAILS SHALL DEVELOP A PULL OUT RESISTANCE OF 1335N MIN.

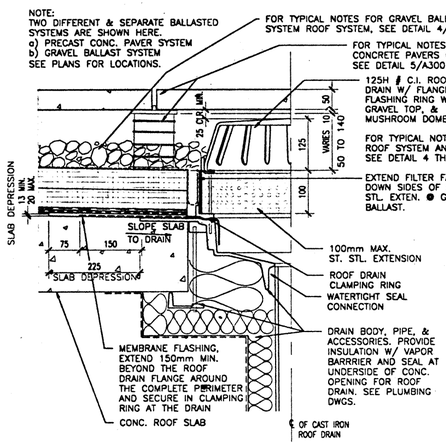

7 TYPE 5:
ROOF DRAIN DETAIL @ TYPE 4 & 5 FLAT ROOFS
SCALE 1 : 5

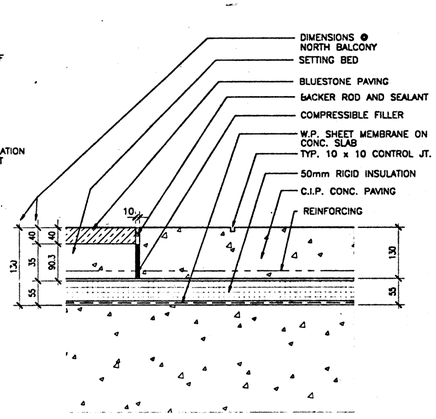

6 TYPE 6:
FLAT ROOF W/ C.I.P. CONC.& BLUSTONE INSETS
SCALE 1 : 5

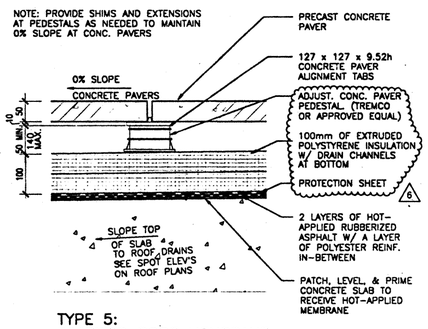

5 TYPE 5:
INVERTED ROOF MEMBRANE
W/ PRECAST CONCRETE PAVERS
SCALE 1 : 5

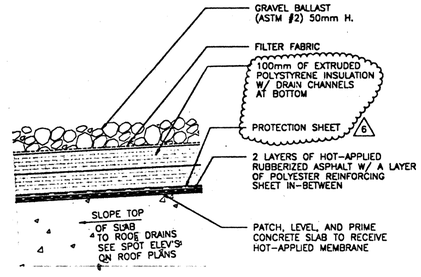

4 TYPE 4:
INVERTED ROOF MEMBRANE W/ GRAVEL BALLAST
SCALE 1 : 5

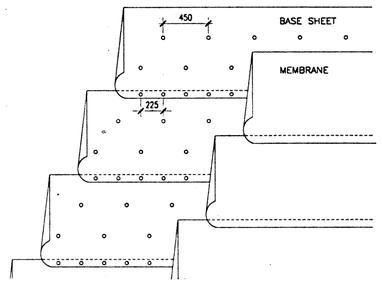

10 CAP NAIL ATTACHMENT
SCALE 1 : 20 TYPE 2 ROOF SYSTEM

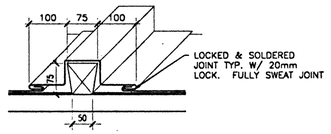

9 TYP. EXPANSION BATTEN DETAIL
SCALE 1 : 5 FLAT SEAM COPPER ROOF

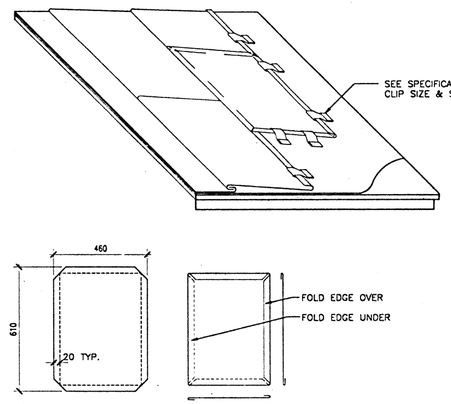

8 TYP. FLAT SEAM ROOFING
SCALE 1 : 10 COPPER

NMAI
CULTURAL RESOURCES CENTER

Architect
Polshek Metcalf Tobey and Partners Joint Venture
James Stewart Polshek and Partners
320 West 13 Street
New York, NY 10014
Metcalf Tobey and Partners
1750 Presidents Street
Reston, Virginia 22090

In Association With
Native American Design Collaborative
Louis L. Weller, President
401 Alvarado Drive S.E. – Suite D
Albuquerque, New Mexico 87108

Structural Engineer
Cagley and Associates
6141 Executive Boulevard
Rockville, Maryland 20852

MEP Engineer
Syska and Hennessy, Inc.
11 West 42 Street
New York, New York 10036

(other consultants)

Key Plan

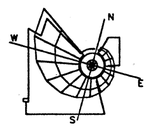

SMITHSONIAN INSTITUTION

Office of Design and Construction
955 L'Enfant Plaza, SW, Suite 3230
Washington, DC 20024

Project No.
ODC No. 912205B

Project Title
CULTURAL RESOURCES CENTER
SUITLAND, MARYLAND

Facility
NATIONAL MUSEUM OF THE AMERICAN INDIAN

Sheet Title
ROOF CONSTRUCTION TYPES

01 – AMENDMENT 1 THROUGH 8 9.30.96
Revisions Date

FINAL

Date Issued:	3.31.95	Sheet No.	A300
Scale:	1 : 5		
Drawn by:	CJR,AB		
Checked by:	WK	111 OF 420	

241A3GD 10-30-96 3:44:22 pm EST

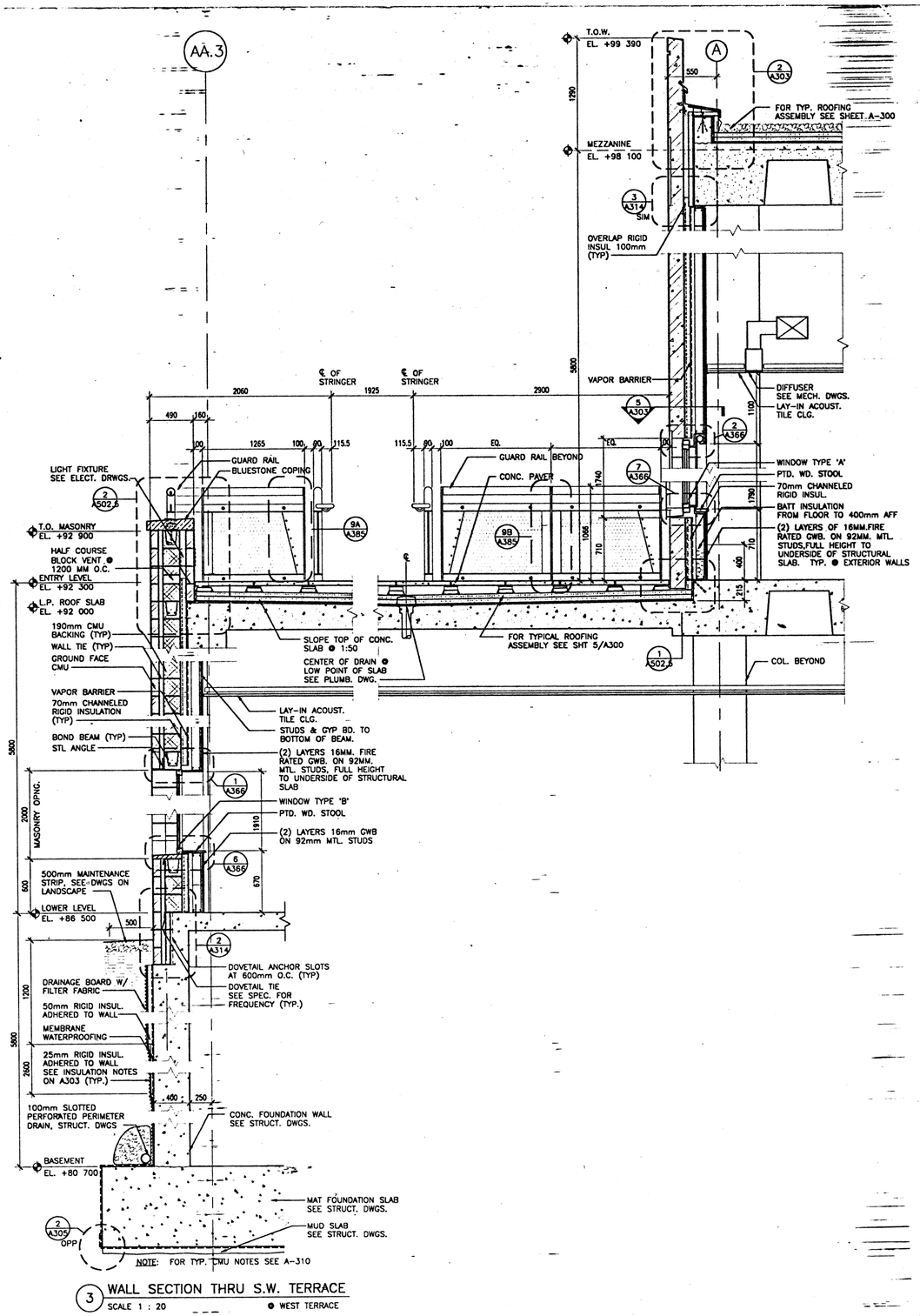

3 WALL SECTION THRU S.W. TERRACE
SCALE 1 : 20 ● WEST TERRACE

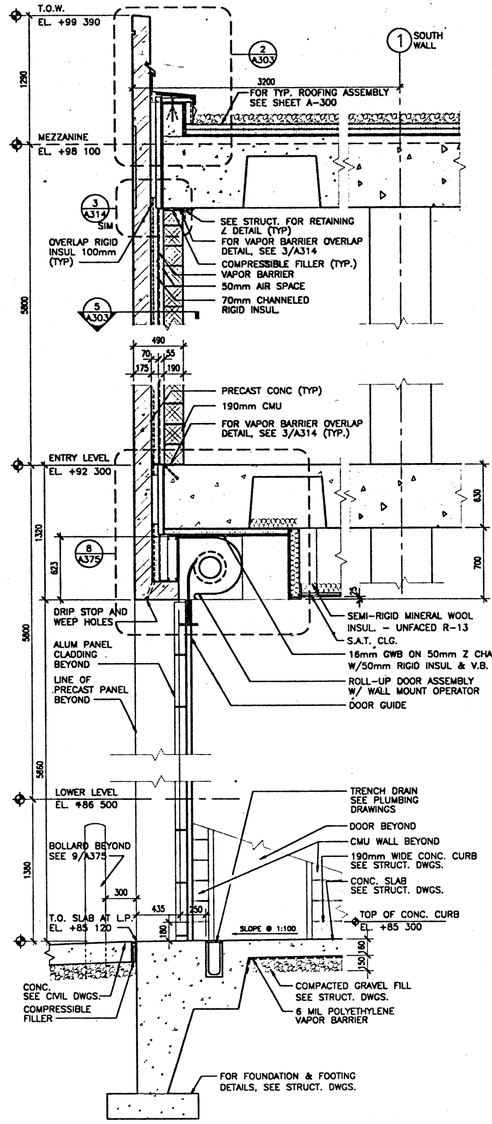

2 WALL SECTION AT ROLL-UP DOOR
SCALE 1 : 20 ● LOADING DOCK

FOR TYPICAL PRECAST NOTES SEE 3/A303

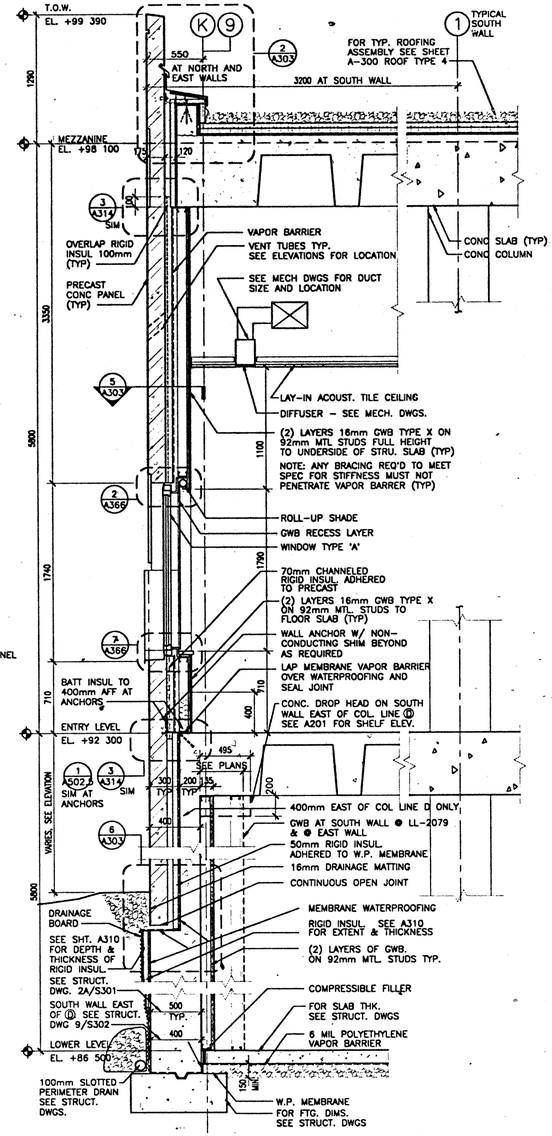

1 WALL SECTION AT TYP. PRECAST
SCALE 1 : 20 THRU WINDOW

GENERAL NOTE:

TYPE 'P' PANELS:
120mm THICKNESS OTHERWISE NOTED, FINISH AND COLOR TO MATCH ON-SITE POURED-IN-PLACE ARCHITECTURAL CONCRETE

TYPE 'R' PANELS:
175mm THICKNESS, TO BE RED/TERRACOTTA IN COLOR PER SPECIFICATIONS.

NOTE:

1) ALL TYPE R PRECAST CONCRETE PANELS ARE 175mm THICK. ANY ADJUSTMENT TO THE PANEL THICKNESS MADE FOR THE CONVENIENCE OF THE CONTRACTOR WILL REMAIN THE SOLE RESPONSIBILITY OF THE CONTRACTOR.
2) CONTRACTOR SHALL COORDINATE ALL PRECAST CONCRETE PANEL WIDTHS WITH ALL PROJECT REQUIREMENTS TO PROVIDE IDENTICAL RELATIVE RELATIONSHIPS AS SPECIFIED BY THE CONTRACT DOCUMENTS (I.E. ALL CAVITIES MUST BE CONSTRUCTED AS SHOWN, ADDITIONAL WIDTH MUST BE ACCOMMODATED AT THE EXTERIOR FACE. ADJUST BUILDING PERIMETER AS REQUIRED)
3) THE CONTRACTOR WILL NOT BE ENTITLED TO ADDITIONAL FEES OF ANY SORT FOR COORDINATION OF ANY TRADE NOR FOR ADDITIONAL QUANTITIES OF MATERIAL OR LABOR RELATIVE TO A DECISION REGARDING PRECAST PANEL THICKNESSES.
4) SHOP DRAWINGS OF RELATED TRADES AND ADJACENT MATERIALS WILL INDICATE THE PROPER THICKNESS OF MATERIAL AND PROPER RELATIVE POSITIONS.

241A301 4-3-95 9:41:32 am EST

NMAI
CULTURAL RESOURCES CENTER

Architect
Polshek Metcalf Tobey and Partners Joint Venture
James Stewart Polshek and Partners
320 West 13 Street
New York, NY 10014
Metcalf Tobey and Partners
1750 Presidents Street
Reston, Virginia 22090
In Association With
Native American Design Collaborative
Louis L. Weller, President
401 Alvarado Drive S.E. - Suite D
Albuquerque, New Mexico 87108
Structural Engineer
Cagley and Associates
6141 Executive Boulevard
Rockville, Maryland 20852
MEP Engineer
Syska and Hennessy, Inc.
11 West 42 Street
New York, New York 10036
(other consultants)

Key Plan

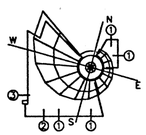

SMITHSONIAN INSTITUTION

Office of Design and Construction
955 L'Enfant Plaza, SW, Suite 3230
Washington, DC 20024

Project No.
ODC No. 912205B

Project Title
CULTURAL RESOURCES CENTER
SUITLAND, MARYLAND

Facility
NATIONAL MUSEUM OF THE AMERICAN INDIAN

Sheet Title
PRECAST WALL SECTIONS AND PLAN DETAILS

Revisions Date

FINAL

Date Issued:	3.31.95	Sheet No.
Scale:	1 : 20	A301
Drawn by:		
Checked by:	WK	112 OF 420

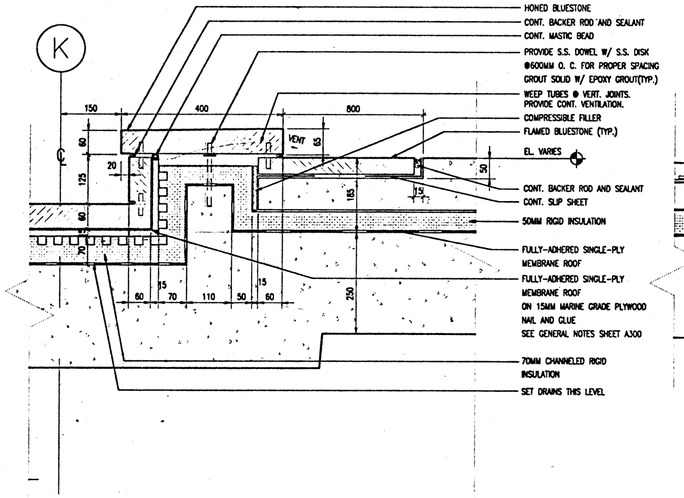

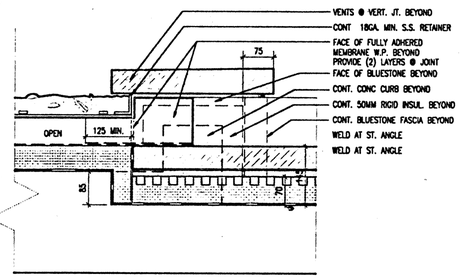

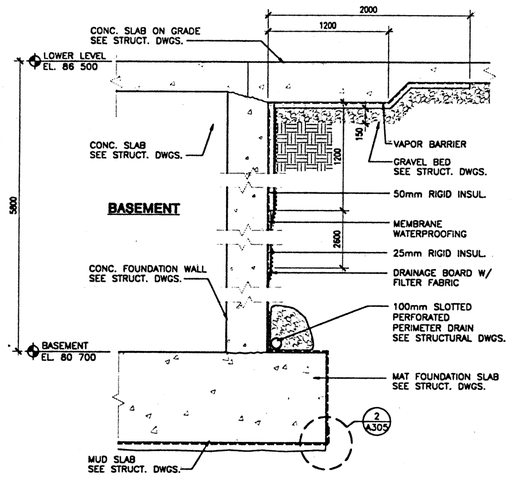

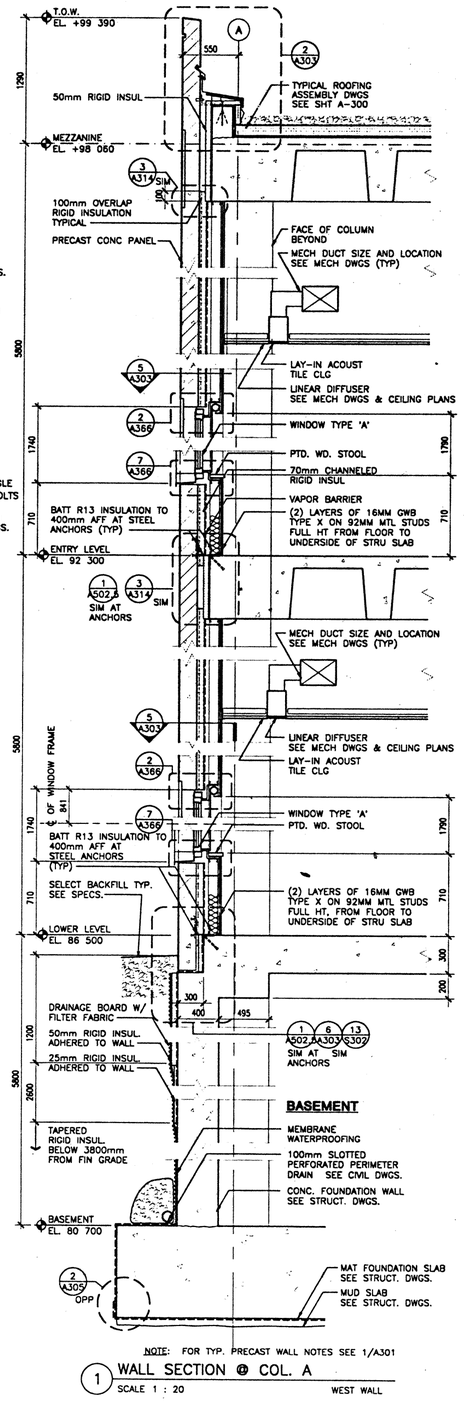

7 SECTION THROUGH WATER COURSE
SCALE 1 : 5

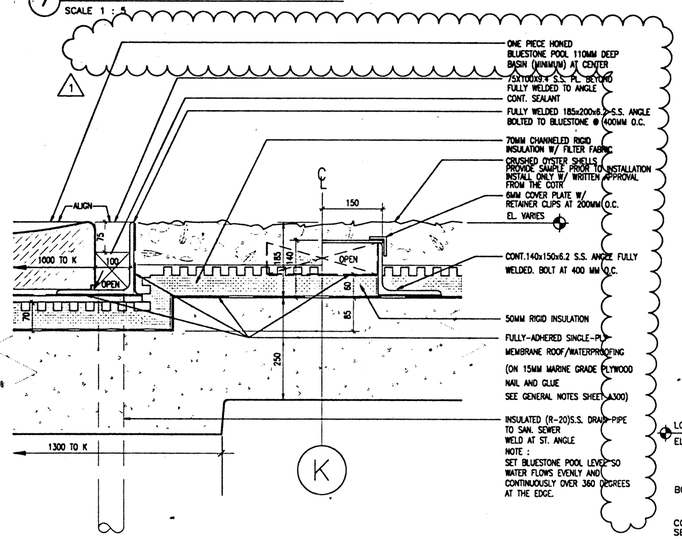

8 SECTION AT REVEAL
SCALE 1 : 5 W/ SECTION AT HIDDEN WATER CHANNEL

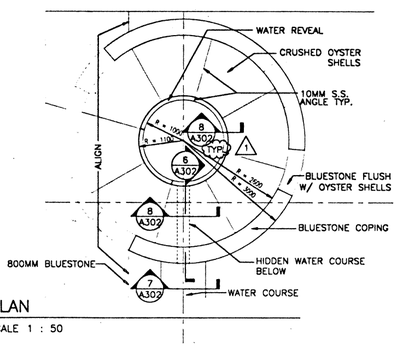

9 PLAN
SCALE 1 : 50

6 SECTION
SCALE 1 : 5

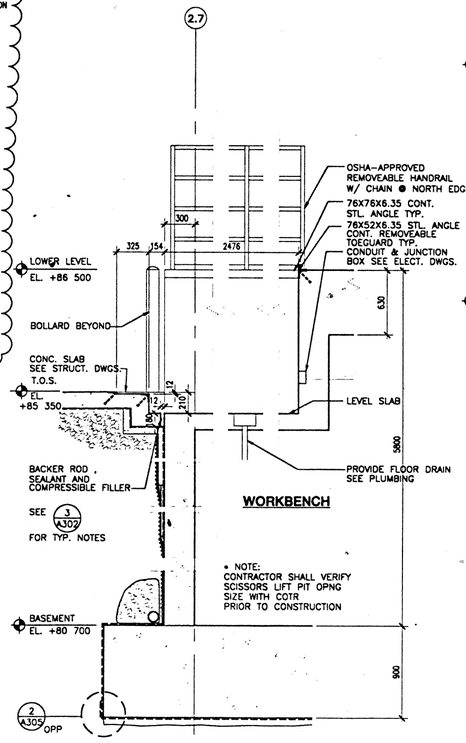

5 SECTION AT LOADING DOCK
SCALE 1 : 20 @ SCISSORS LIFT

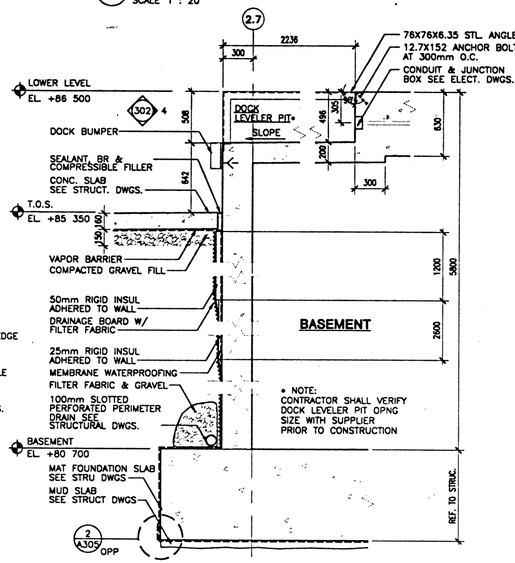

3 SECTION AT LOADING DOCK
SCALE 1 : 20 @ DOCK LEVELER

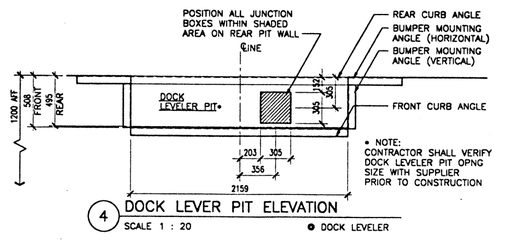

4 DOCK LEVER PIT ELEVATION
SCALE 1 : 20 @ DOCK LEVELER

NMAI
CULTURAL RESOURCES CENTER

Architect
Polshek Metcalf Tobey and Partners Joint Venture
James Stewart Polshek and Partners
320 West 13 Street
New York, NY 10014

Metcalf Tobey and Partners
1750 Presidents Street
Reston, Virginia 22090

In Association With
Native American Design Collaborative
Louis L. Weller, President
401 Alvarado Drive S.E. – Suite D
Albuquerque, New Mexico 87108

Structural Engineer
Cagley and Associates
6141 Executive Boulevard
Rockville, Maryland 20852

MEP Engineer
Syska and Hennessy, Inc.
11 West 42 Street
New York, New York 10036

(other consultants)

Key Plan

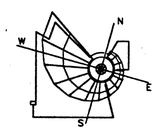

SMITHSONIAN INSTITUTION

Office of Design and Construction
955 L'Enfant Plaza, SW, Suite 3230
Washington, DC 20024

Project No.
ODC No. 912205B

Project Title
CULTURAL RESOURCES CENTER
SUITLAND, MARYLAND

Facility
NATIONAL MUSEUM OF THE AMERICAN INDIAN

Sheet Title
PRECAST WALL SECTIONS AND PLAN DETAILS

Revisions	Date
01 – AMENDMENT 1 THROUGH 8	9.30.96

FINAL

Date Issued: 3.31.95	Sheet No. A302
Scale: 1 : 20	
Drawn by:	
Checked by: WK	113 OF 420

K:\DWGS\PROJECT\NMAI9241\241A302 10-3-96 10:55:34 pm EST

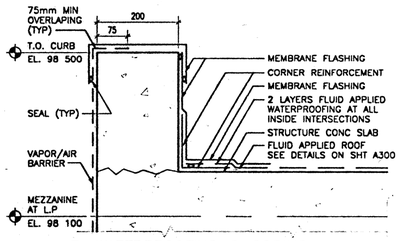

3 WATERPROOFING @ COPING
SCALE 1 : 5 TYPICAL

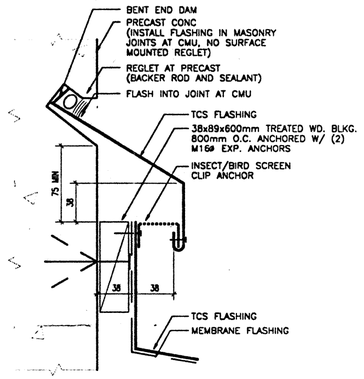

4 PARAPET VENT
SCALE 1 : 2

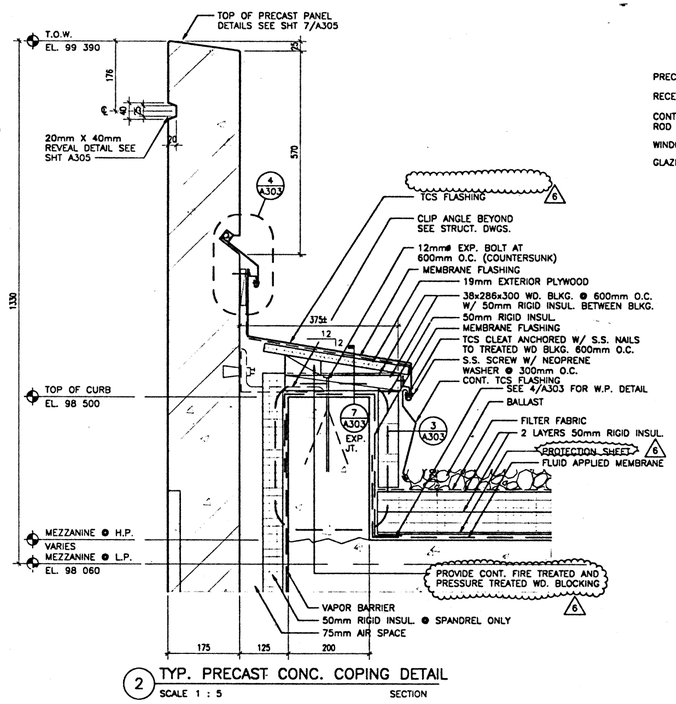

2 TYP. PRECAST CONC. COPING DETAIL
SCALE 1 : 5 SECTION

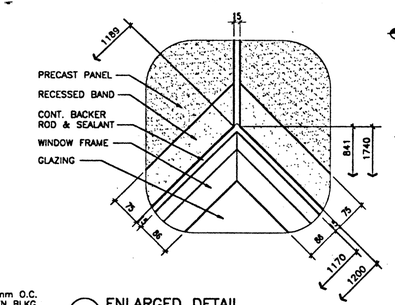

1A ENLARGED DETAIL
SCALE 1 : 5

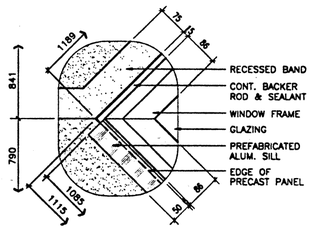

1B ENLARGED DETAIL
SCALE 1 : 5

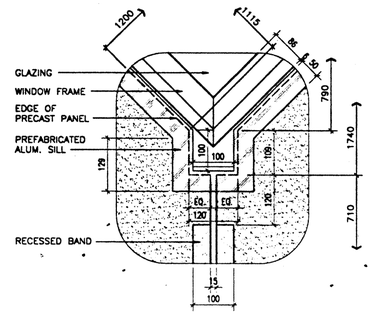

1C ENLARGED DETAIL
SCALE 1 : 5

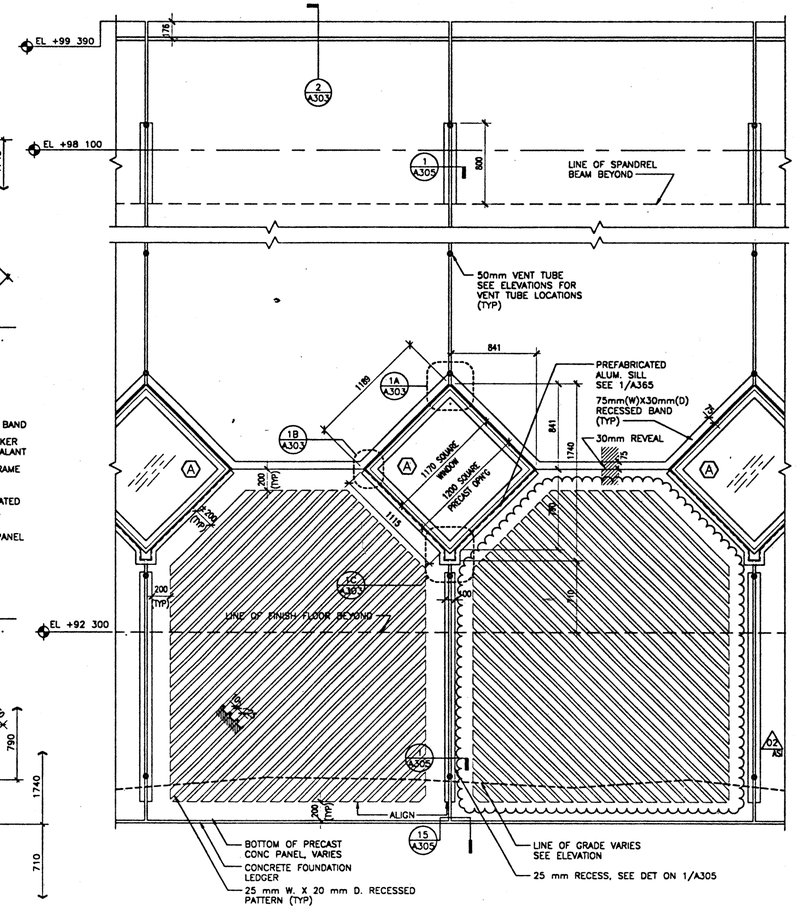

1 ELEVATION DETAIL AT SOUTH WALL
SCALE 1 : 20

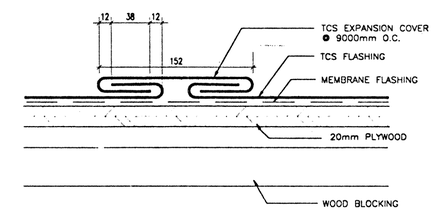

7 EXPANSION JT. @ PRECAST CONC. COPING
SCALE 1 : 2

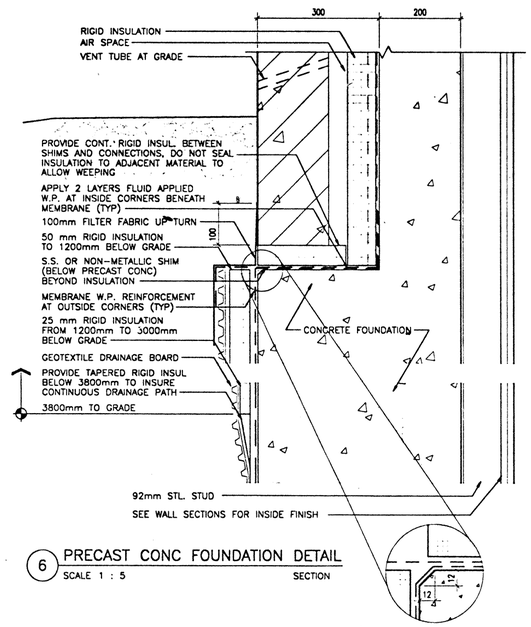

6 PRECAST CONC FOUNDATION DETAIL
SCALE 1 : 5 SECTION

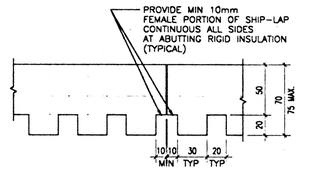

5A RIGID INSULATION DETAIL
SCALE 1 : 2

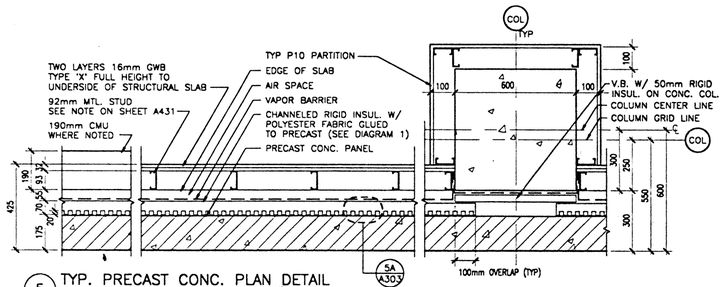

5 TYP. PRECAST CONC. PLAN DETAIL
SCALE 1 : 10

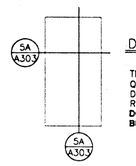

DIAGRAM 1

TROWEL ADHESIVE TO SUBSTRATE. QUANTITY OF ADHESIVE TO BE DETERMINED BY MANUFACTURER'S RECOMMENDATION.
DO NOT APPLY IN CONTINUOUS BEADS TO INSULATION.

INSULATION NOTES

1. INSULATION IN WALL SECTIONS SHALL BE 50mm RIGID INSULATION (R-10) FROM GRADE TO 1200mm BELOW GRADE
2. INSULATION IN WALL SECTIONS SHALL BE 25mm RIGID INSULATION (R-5) FROM 1200mm TO 3800mm BELOW GRADE
3. WHERE FOOTINGS ARE SHALLOWER THAN 3800mm FROM FINISH GRADE INSULATION WILL WRAP UP THE INBOARD SIDE OF THE FOUNDATION WALL, THEN CONTINUE UNDER THE SLAB. 3800mm - (DEPTH TO TOP OF FOOTING) = HORIZ. RUN OF INSUL. FROM INSIDE FACE OF FOUND. WALL
4. AT TRANSITION BETWEEN 50mm AND 25mm RIGID INSULATION AND AT 3800mm BELOW FINISH GRADE, PROVIDE TAPERED RIGID INSULATION BOARD TO INSURE CONTINUOUS DRAINAGE PATH THROUGH DRAINAGE BD.

NMAI
CULTURAL RESOURCES CENTER

Architect
Polshek Metcalf Tobey and Partners Joint Venture

James Stewart Polshek and Partners
320 West 13 Street
New York, NY 10014

Metcalf Tobey and Partners
1750 Presidents Street
Reston, Virginia 22090

In Association With
Native American Design Collaborative

Louis L. Weller, President
401 Alvarado Drive S.E. - Suite D
Albuquerque, New Mexico 87108

Structural Engineer
Cagley and Associates
6141 Executive Boulevard
Rockville, Maryland 20852

MEP Engineer
Syska and Hennessy, Inc.
11 West 42 Street
New York, New York 10036

(other consultants)

Key Plan

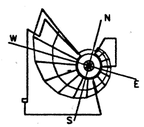

SMITHSONIAN INSTITUTION

Office of Design and Construction
955 L'Enfant Plaza, SW, Suite 3230
Washington, DC 20024

Project No.
ODC No. 912205B

Project Title
CULTURAL RESOURCES CENTER
SUITLAND, MARYLAND

Facility
NATIONAL MUSEUM OF THE AMERICAN INDIAN

Sheet Title
PRECAST WALL SECTIONS AND TYPICAL DETAILS

01 - AMENDMENT 1 THROUGH 8 9.30.96
Revisions Date

FINAL

Date Issued: 3.31.95	Sheet No. A303
Scale: AS SHOWN	
Drawn by:	
Checked by: WK	114 OF 420

241A303 10-2-96 6:07:16 pm EST

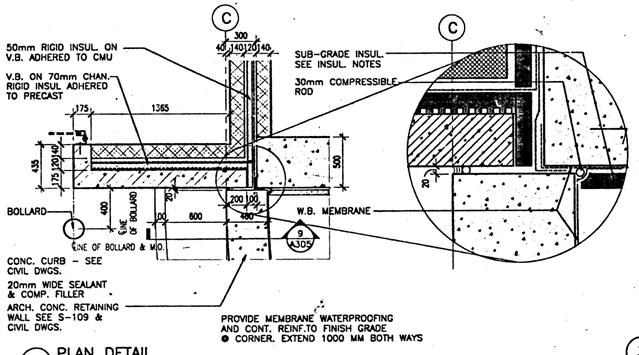

4 PLAN DETAIL
SCALE 1 : 20

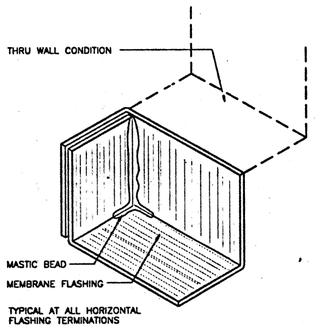

3 TYP. FLASHING END DAM
SCALE N.T.S.

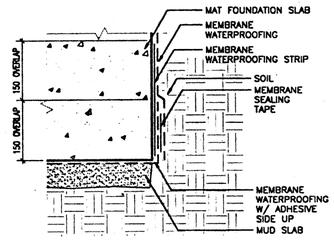

2 WATERPROOFING DETAIL
SCALE 1 : 5

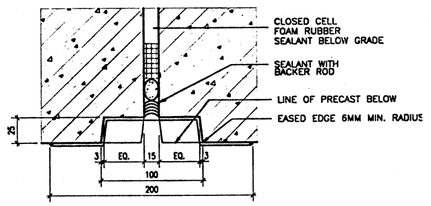

1 TYPICAL RECESS JOINT DETAIL
SCALE 1 : 2
PRECAST PANELS

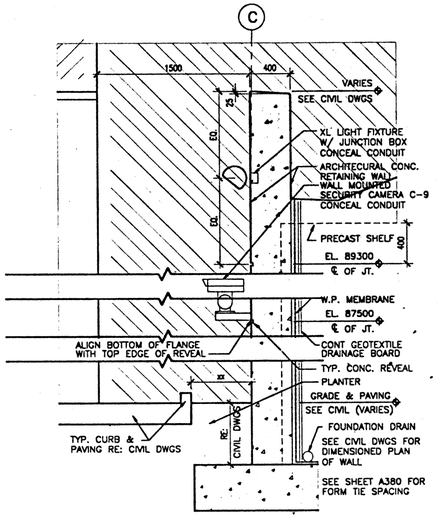

9 SECTION OF RETAINING WALL
SCALE 1 : 20
● LOADING DOCK

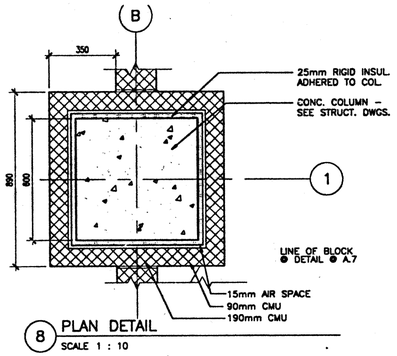

8 PLAN DETAIL
SCALE 1 : 10

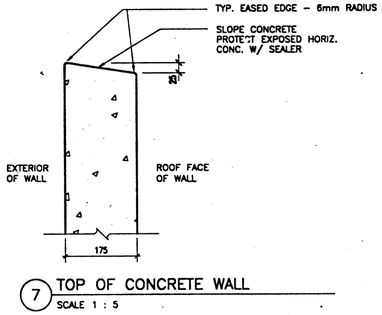

7 TOP OF CONCRETE WALL
SCALE 1 : 5

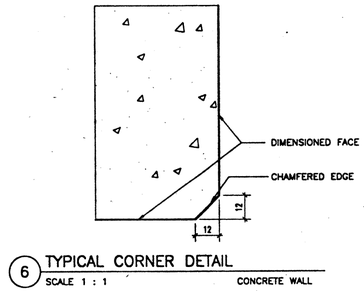

6 TYPICAL CORNER DETAIL
SCALE 1 : 1
CONCRETE WALL

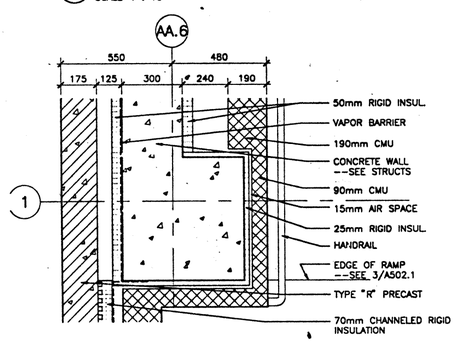

13 PLAN DETAIL
SCALE 1 : 10

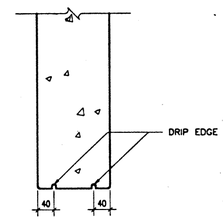

12 OPENING AT HEAD DETAIL
SCALE 1 : 5

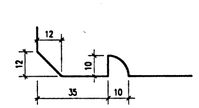

11 TYPICAL DRIP EDGE
SCALE 1 : 1
CONCRETE WALL

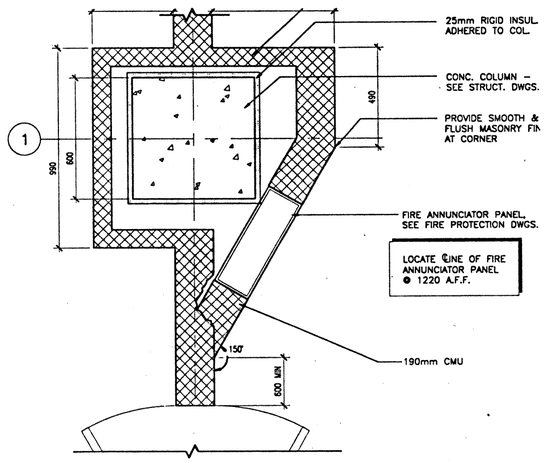

17 PLAN DETAIL
SCALE 1 : 10

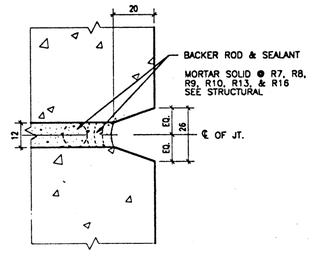

15 TYPICAL TYPE P PRECAST JOINT
SCALE 1 : 1
CONCRETE WALL

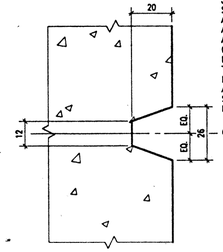

14 TYPICAL JOINT DETAIL
SCALE 1 : 1
CONCRETE WALL

EXPOSED CONTROL JTS. NOT SHOWN IN THESE CONSTRUCTION DOCUMENTS LOCATED BY THE CONTRACTOR IN ARCH. CONC. SURFACES SHALL ALIGN WITH CONTROL JTS. SHOWN.

LOCATIONS OF ADDITIONAL VERT. JOINTS LOCATED BY THE CONTRACTOR SHALL BE SUBMITTED TO THE ARCHITECT PRIOR TO BEGINNING ANY ASSOCIATED CONSTRUCTION IN THAT AREA. CONSTRUCTION SHALL NOT COMMENCE IN THAT AREA PRIOR TO RECEIVING WRITTEN APPROVAL FROM THE ARCHITECT. CONTRACTOR SHALL BEAR ANY AND ALL ADDITONAL COSTS ASSOCIATED W/ REMEDIAL WORK REQUIRED SHOULD WRITTEN APPROVAL NOT BE RECEIVED PRIOR TO CONSTRUCTION.

241A305 6-26-95 9:52:55 am EST

NMAI
CULTURAL RESOURCES CENTER

Architect
Polshek Metcalf Tobey and Partners Joint Venture
James Stewart Polshek and Partners
320 West 13 Street
New York, NY 10014
Metcalf Tobey and Partners
1750 Presidents Street
Reston, Virginia 22090
In Association With
Native American Design Collaborative
Louis L. Weller, President
401 Alvarado Drive S.E. - Suite D
Albuquerque, New Mexico 87108
Structural Engineer
Cagley and Associates
6141 Executive Boulevard
Rockville, Maryland 20852
MEP Engineer
Syska and Hennessy, Inc.
11 West 42 Street
New York, New York 10036
(other consultants)

Key Plan

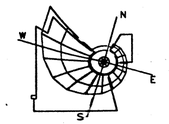

SMITHSONIAN INSTITUTION

Office of Design and Construction
955 L'Enfant Plaza, SW, Suite 3230
Washington, DC 20024

Project No.
ODC No. 9122058

Project Title
CULTURAL RESOURCES CENTER
SUITLAND, MARYLAND

Facility
NATIONAL MUSEUM OF THE AMERICAN INDIAN

Sheet Title
PRECAST DETAILS

Revisions Date

FINAL

Date Issued:	3.31.95	Sheet No.	●
Scale:	VARIES		A305
Drawn by:	WDW		
Checked by:	WC	115 OF 420	

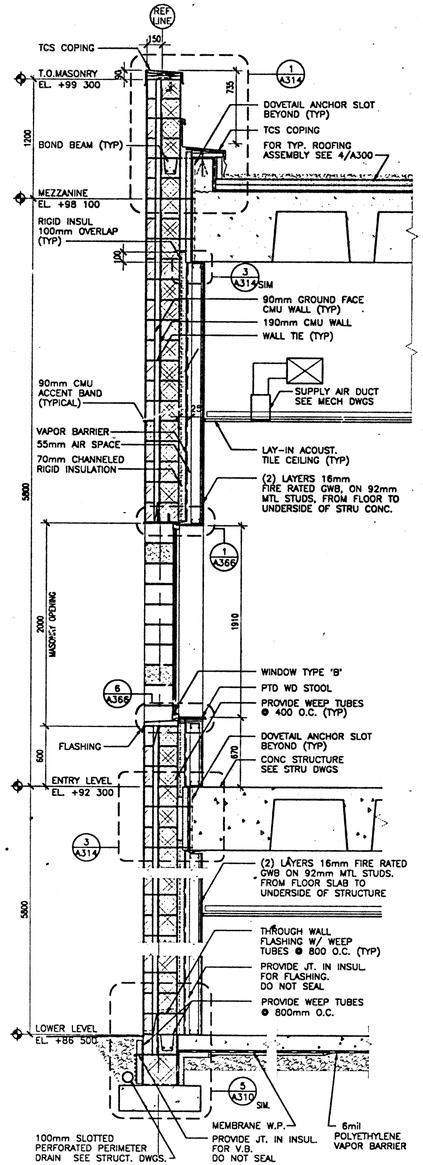

3 WALL SECTION NORTHEAST WALL
SCALE 1 : 20 THRU WINDOW

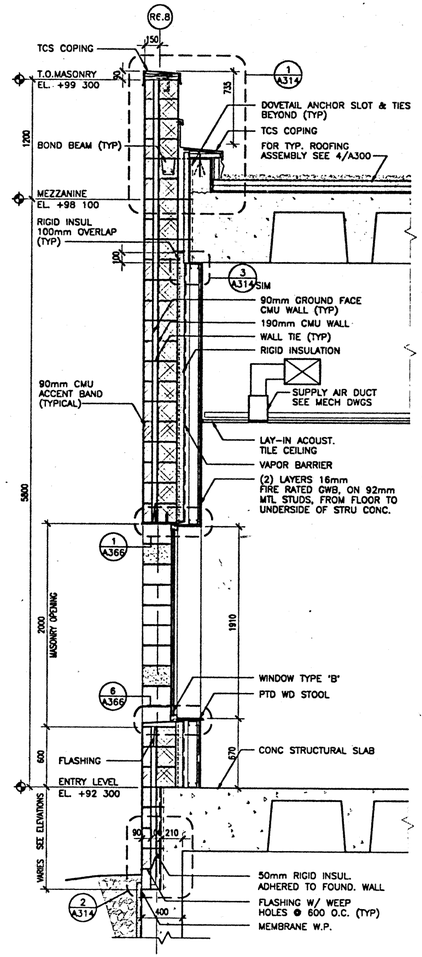

2 SECTION AT EAST ENTRY WALL
SCALE 1 : 20 THRU WINDOW

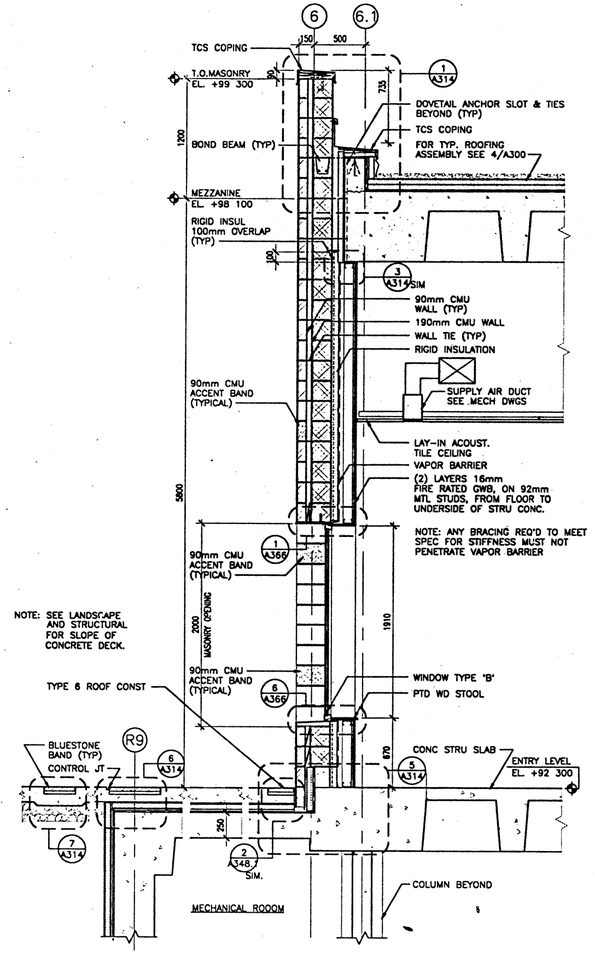

1 SECTION AT SOUTH ENTRY WALL
SCALE 1 : 20 THRU WINDOW

FOR TYPICAL NOTES SEE 3/A310

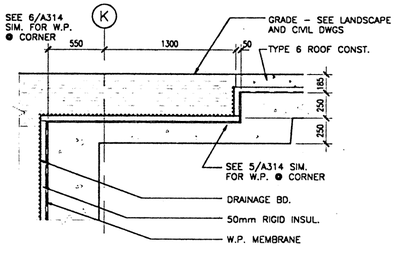

7 PLAZA EDGE DETAIL
SCALE 1 : 20 SECTION

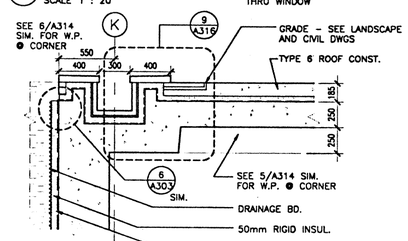

6 PLAZA EDGE DETAIL
SCALE 1 : 20 SECTION

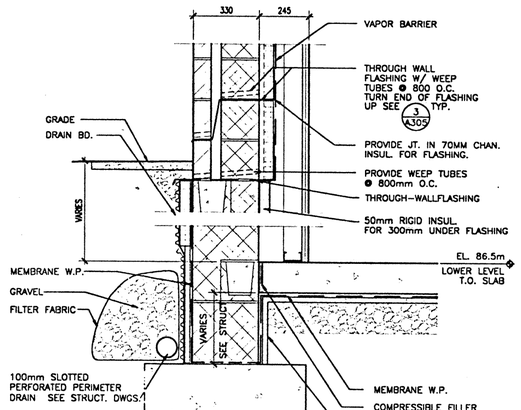

5 WALL SECTION NORTHEAST WALL
SCALE 1 : 10 @ RETAINING CONDITION

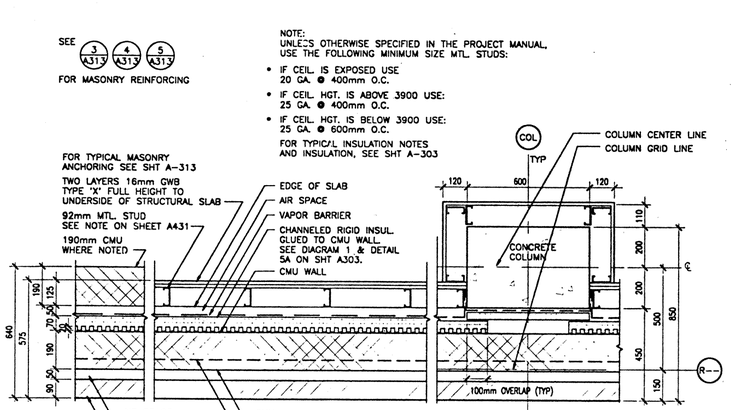

4 TYP. CMU WALL DETAIL
SCALE 1 : 10

2414310 6-26-95 9:54:29 am EST

NMAI
CULTURAL RESOURCES CENTER

Architect
Polshek Metcalf Tobey and Partners Joint Venture
James Stewart Polshek and Partners
320 West 13 Street
New York, NY 10014
Metcalf Tobey and Partners
1750 Presidents Street
Reston, Virginia 22090
In Association With
Native American Design Collaborative
Louis L. Weller, President
401 Alvarado Drive S.E. – Suite D
Albuquerque, New Mexico 87108
Structural Engineer
Cagley and Associates
6141 Executive Boulevard
Rockville, Maryland 20852
MEP Engineer
Syska and Hennessy, Inc.
11 West 42 Street
New York, New York 10036
(other consultants)

Key Plan

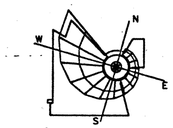

SMITHSONIAN INSTITUTION

Office of Design and Construction
955 L'Enfant Plaza, SW, Suite 3230
Washington, DC 20024

Project No.
ODC No. 912205B

Project Title
CULTURAL RESOURCES CENTER
SUITLAND, MARYLAND

Facility
NATIONAL MUSEUM OF THE AMERICAN INDIAN

Sheet Title
CMU WALL SECTIONS, ELEVATIONS AND DETAILS

Revisions Date

FINAL

Date Issued: 3.31.95	Sheet No. A310
Scale: AS NOTED	
Drawn by:	
Checked by: WK	115 OF 420

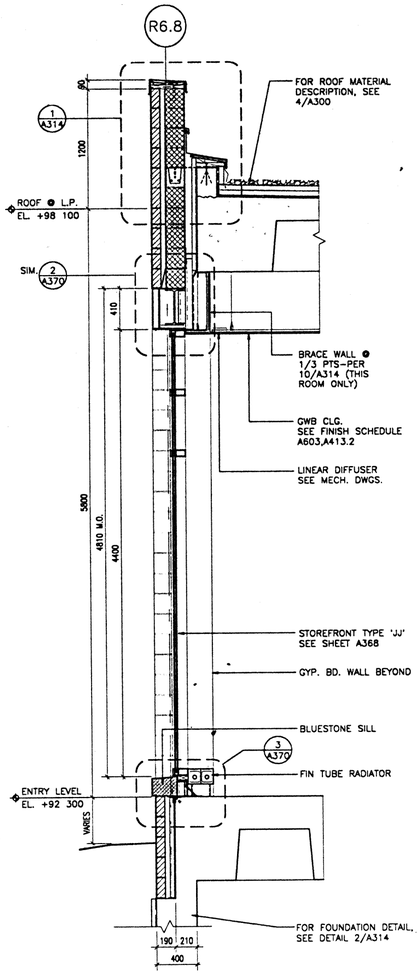

4 SECTION
SCALE 1 : 20

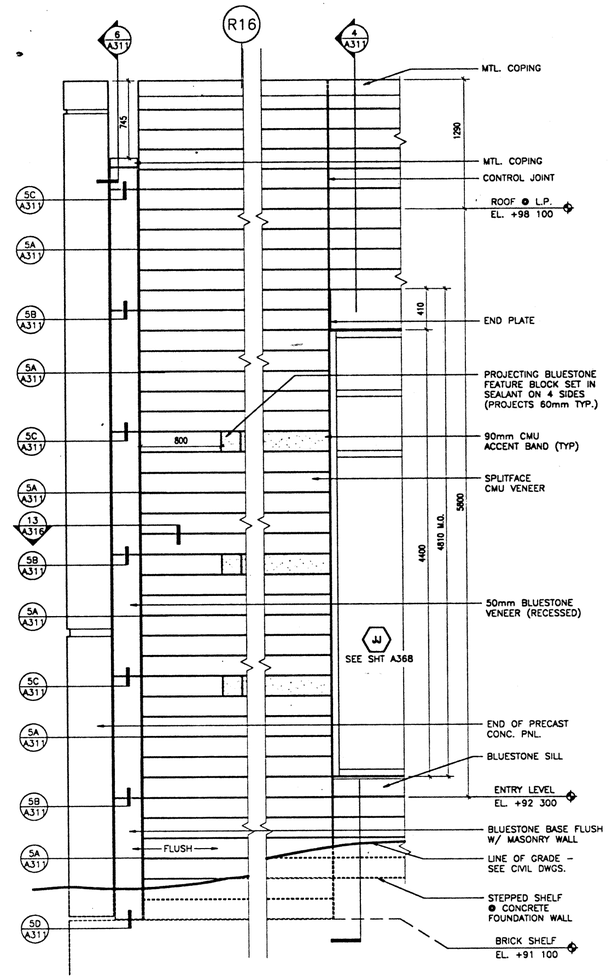

3 DETAIL ELEVATION
SCALE 1 : 20

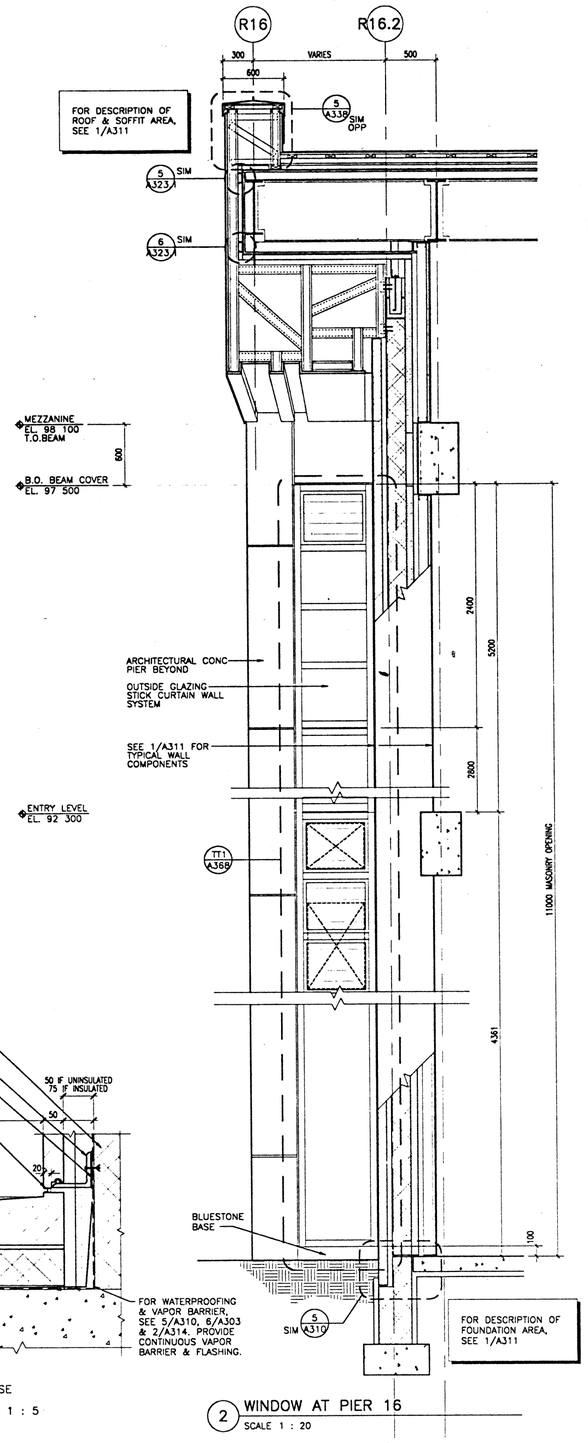

2 WINDOW AT PIER 16
SCALE 1 : 20

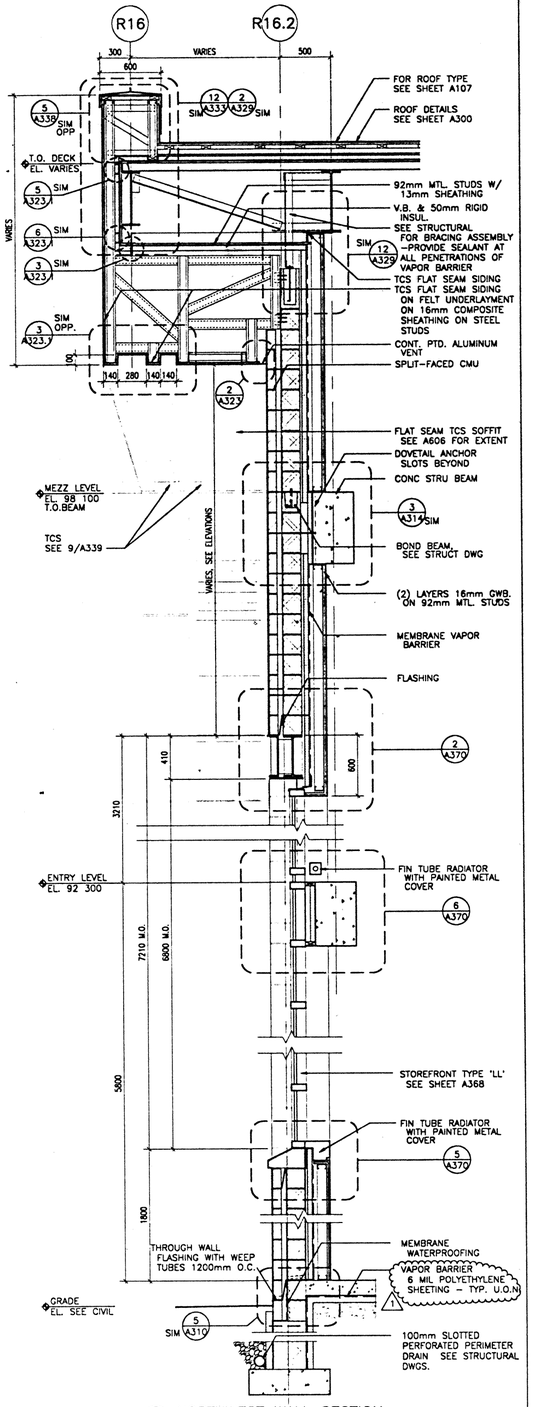

1 NORTHWEST WALL SECTION
SCALE 1 : 20 THRU WINDOW

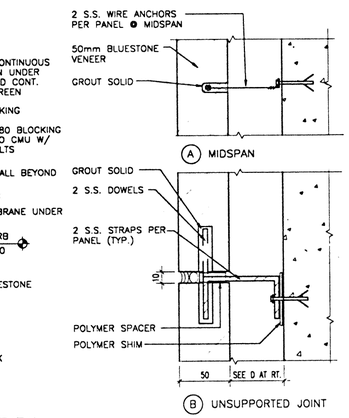

6 SECTION THRU BLUESTONE REVEAL
SCALE 1 : 20 AT CORNER

5 BLUESTONE FASTENING DETAILS
SCALE 1 : 2

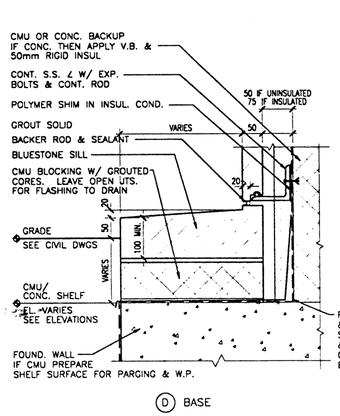

D BASE
SCALE: 1 : 5

241A311 10-2-96 6:09:00 pm EST

NMAI
CULTURAL RESOURCES CENTER

Architect
Polshek Metcalf Tobey and Partners Joint Venture

James Stewart Polshek and Partners
320 West 13 Street
New York, NY 10014

Metcalf Tobey and Partners
1750 Presidents Street
Reston, Virginia 22090

In Association With
Native American Design Collaborative

Louis L. Weller, President
401 Alvarado Drive S.E. - Suite D
Albuquerque, New Mexico 87108

Structural Engineer
Cagley and Associates
6141 Executive Boulevard
Rockville, Maryland 20852

MEP Engineer
Syska and Hennessy, Inc.
11 West 42 Street
New York, New York 10036

(other consultants)

Key Plan

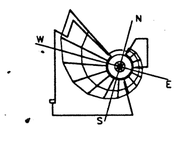

SMITHSONIAN INSTITUTION

Office of Design and Construction
955 L'Enfant Plaza, SW, Suite 3230
Washington, DC 20024

Project No.
ODC No. 912205B

Project Title
CULTURAL RESOURCES CENTER
SUITLAND, MARYLAND

Facility
NATIONAL MUSEUM OF THE AMERICAN INDIAN

Sheet Title
NORTHWEST WALL
WALL SECTIONS, DETAILS

Revisions	Date
01 - AMENDMENT 1 THROUGH 8	9.30.96

FINAL

Date Issued:	3.31.95	Sheet No.	A311
Scale:	VARIES		
Drawn by:			
Checked by:	WK	117 OF	420

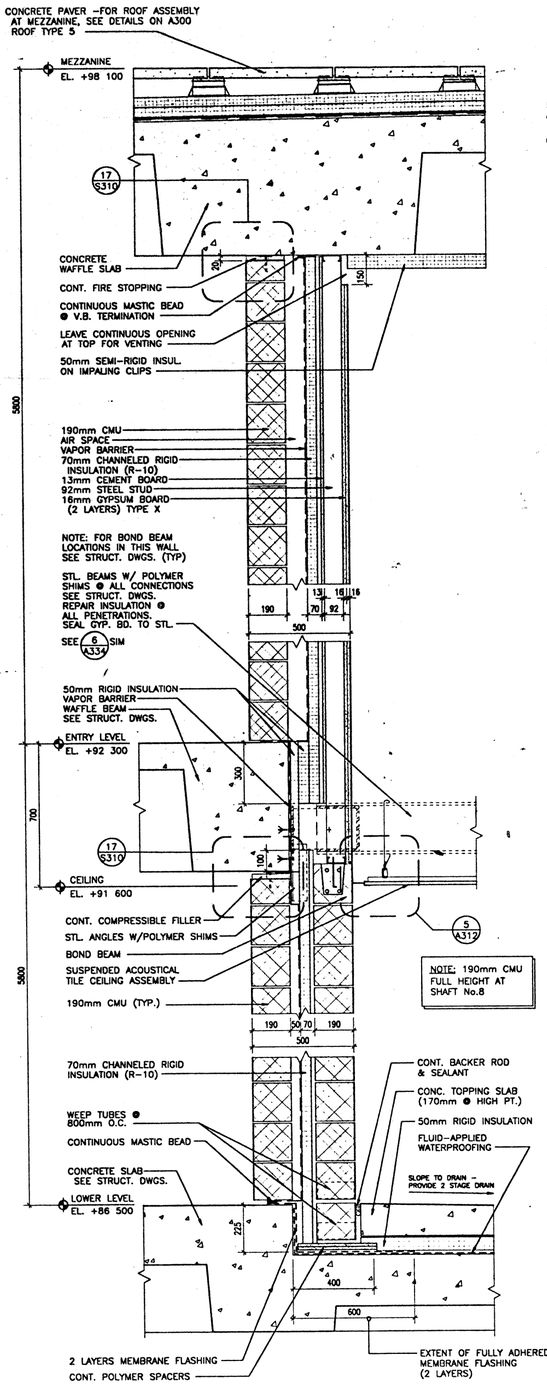

6 WALL SECTION
SCALE 1 : 10

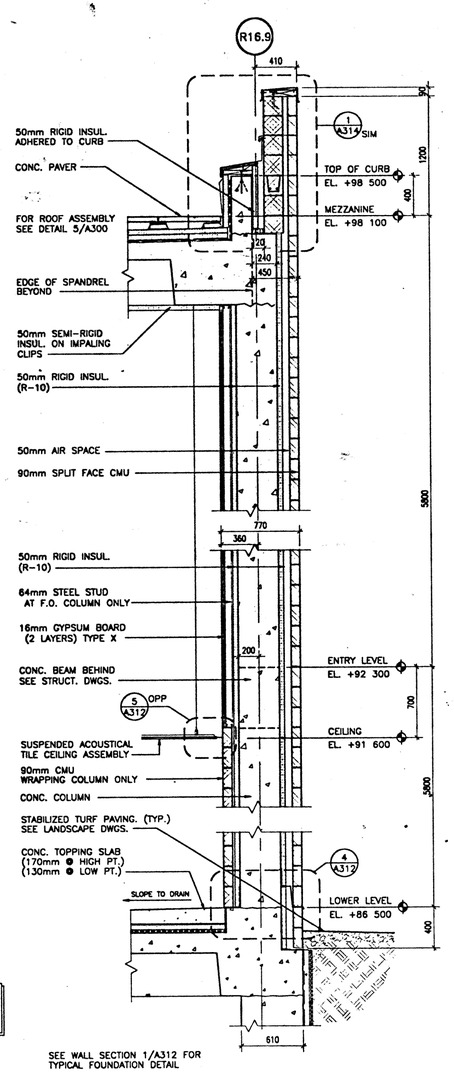

SEE WALL SECTION 1/A312 FOR TYPICAL FOUNDATION DETAIL

NOTE: SEE ELEVATIONS FOR MASONRY ACCENT BANDS

3 WALL SECTION
SCALE 1 : 20

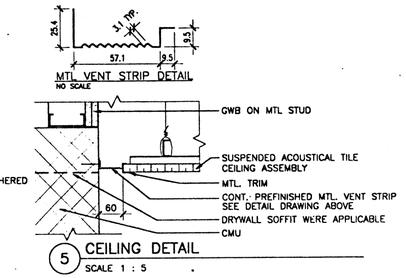

5 CEILING DETAIL
SCALE 1 : 5

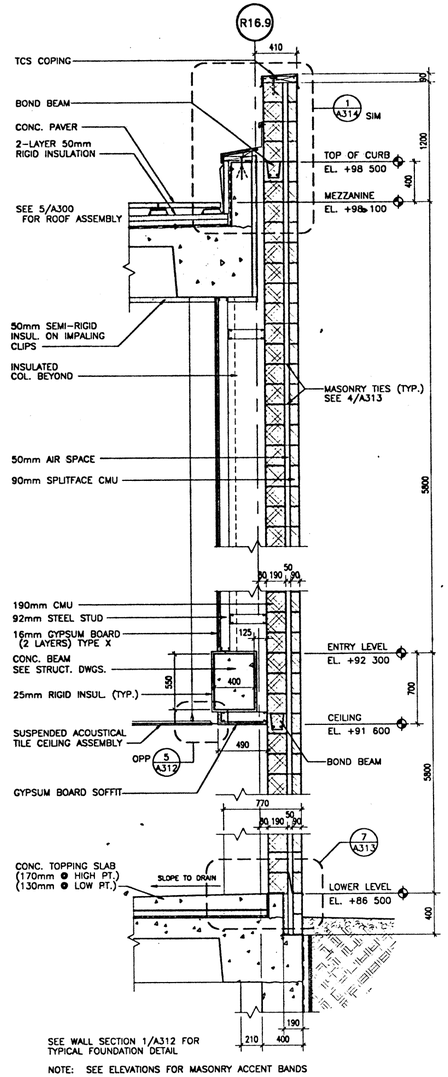

SEE WALL SECTION 1/A312 FOR TYPICAL FOUNDATION DETAIL

NOTE: SEE ELEVATIONS FOR MASONRY ACCENT BANDS

2 WALL SECTION
SCALE 1 : 20

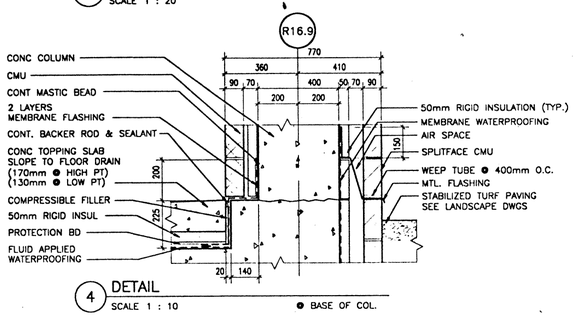

4 DETAIL
SCALE 1 : 10

@ BASE OF COL.

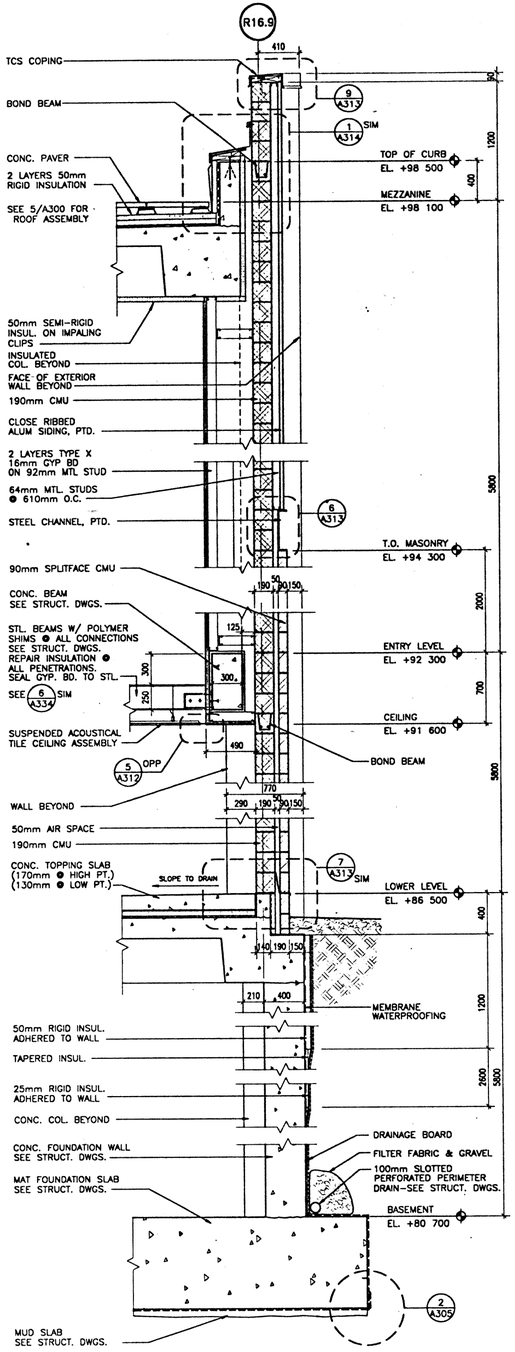

1 WALL SECTION
SCALE 1 : 20

241A312 4-3-95 9:51:47 am EST

NMAI
CULTURAL RESOURCES CENTER

Architect
Polshek Metcalf Tobey and Partners Joint Venture

James Stewart Polshek and Partners
320 West 13 Street
New York, NY 10014

Metcalf Tobey and Partners
1750 Presidents Street
Reston, Virginia 22090

In Association With
Native American Design Collaborative

Louis L. Weller, President
401 Alvarado Drive S.E. - Suite D
Albuquerque, New Mexico 87108

Structural Engineer
Cagley and Associates
6141 Executive Boulevard
Rockville, Maryland 20852

MEP Engineer
Syska and Hennessy, Inc.
11 West 42 Street
New York, New York 10036

(other consultants)

Key Plan

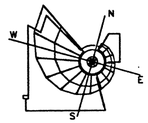

SMITHSONIAN INSTITUTION

Office of Design and Construction
955 L'Enfant Plaza, SW, Suite 3230
Washington, DC 20024

Project No.
ODC No. 9122058

Project Title
CULTURAL RESOURCES CENTER
SUITLAND, MARYLAND

Facility
NATIONAL MUSEUM OF THE AMERICAN INDIAN

Sheet Title
WALL SECTIONS AND DETAILS AT OVER-SIZE ACCESS

Revisions **Date**

FINAL

Date Issued: 3.31.95	Sheet No. A312
Scale: AS NOTED	
Drawn by:	
Checked by: WK	118 OF 420

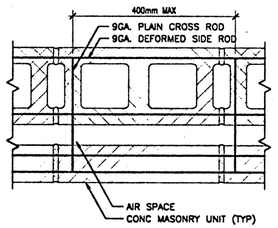

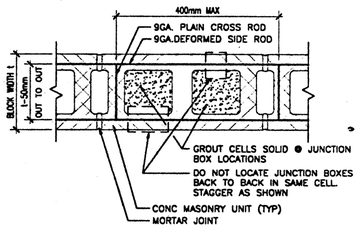

5 HORIZONTAL JOINT REINFORCING
SCALE NOT TO SCALE

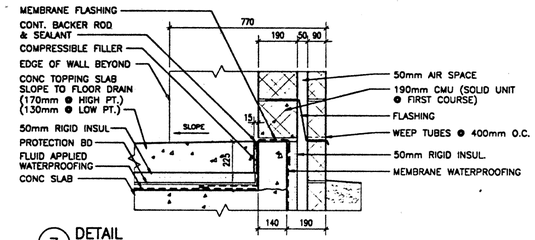

7 DETAIL
SCALE 1 : 10

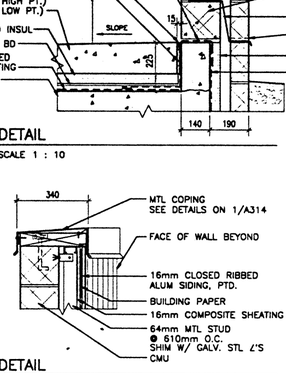

9 DETAIL
SCALE 1 : 10

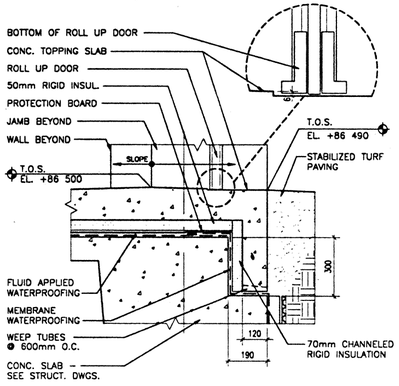

11 DETAIL
SCALE 1 : 10

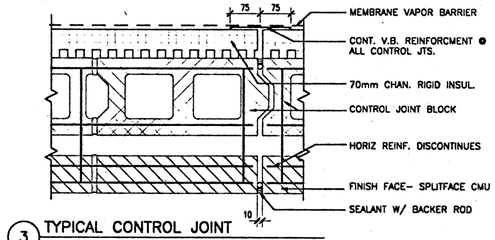

3 TYPICAL CONTROL JOINT
SCALE 1 : 5

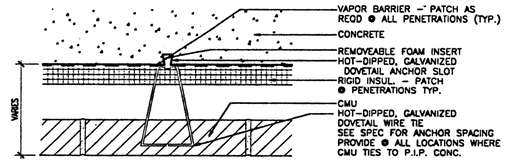

4 TYPICAL DOVETAIL ANCHOR
SCALE 1 : 5

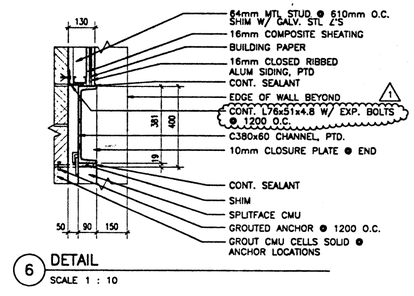

6 DETAIL
SCALE 1 : 10

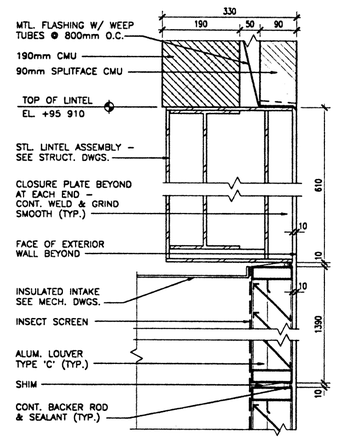

8 DETAIL @ LINTEL
SCALE 1 : 5

10 NOT USED
SCALE

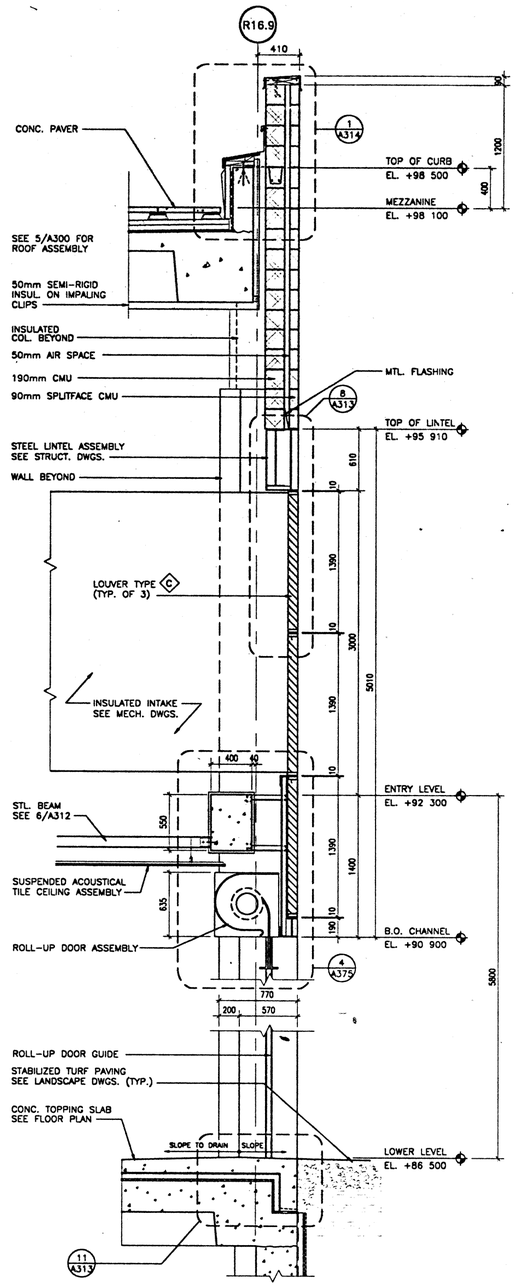

SEE WALL SECTION 1/A313 FOR TYPICAL FOUNDATION DETAIL
NOTE: SEE ELEVATIONS FOR MASONRY ACCENT BANDS

2 WALL SECTION
SCALE 1 : 20

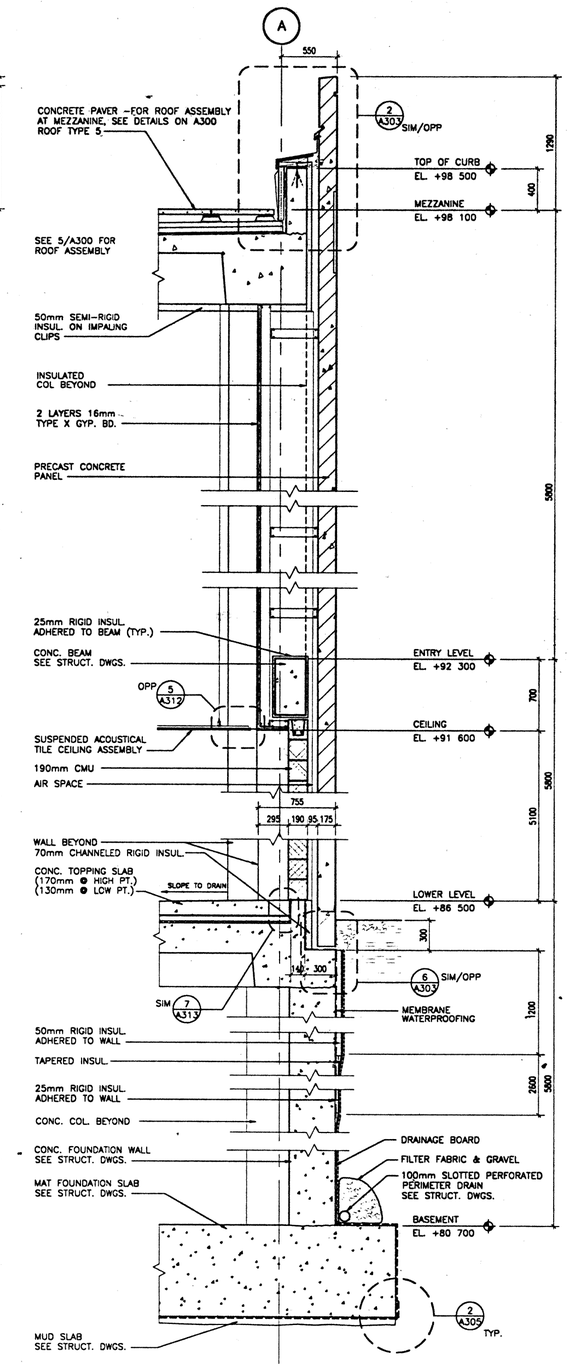

1 WALL SECTION
SCALE 1 : 20

241A313 10-2-96 6:10:41 pm EST

NMAI
CULTURAL RESOURCES CENTER

Architect
Polshek Metcalf Tobey and Partners Joint Venture

James Stewart Polshek and Partners
320 West 13 Street
New York, NY 10014

Metcalf Tobey and Partners
1750 Presidents Street
Reston, Virginia 22090

In Association With
Native American Design Collaborative

Louis L. Weller, President
401 Alvarado Drive S.E. - Suite D
Albuquerque, New Mexico 87108

Structural Engineer
Cagley and Associates
6141 Executive Boulevard
Rockville, Maryland 20852

MEP Engineer
Syska and Hennessy, Inc.
11 West 42 Street
New York, New York 10036

(other consultants)

Key Plan

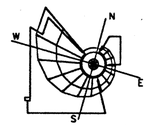

SMITHSONIAN INSTITUTION

Office of Design and Construction
955 L'Enfant Plaza, SW, Suite 3230
Washington, DC 20024

Project No.
ODC No. 9122058

Project Title
CULTURAL RESOURCES CENTER
SUITLAND, MARYLAND

Facility
NATIONAL MUSEUM OF THE AMERICAN INDIAN

Sheet Title
WALL SECTIONS AND DETAILS AT OVER-SIZE ACCESS

01 - AMENDMENT 1 THROUGH 8 9.30.96
Revisions Date

FINAL

Date Issued:	3.31.95	Sheet No.	A313
Scale:	AS NOTED		
Drawn by:			
Checked by:	WK	119 OF 420	

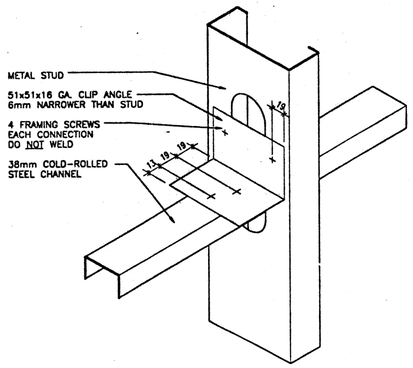

10 LATERAL BRACING FOR FURRING
SCALE 1:2 FOR EXT. WALLS W/ CEIL. HGT. OVER 4000mm

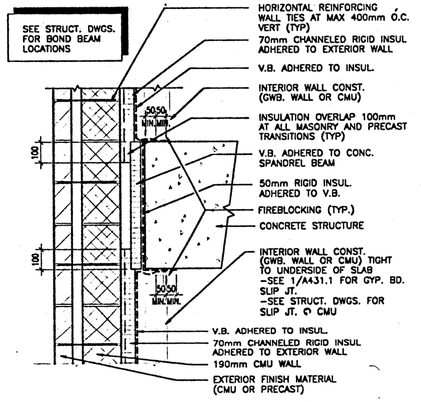

3 SPANDREL BEAM DETAIL SIM AT PRECAST
SCALE 1 : 10 SECTION

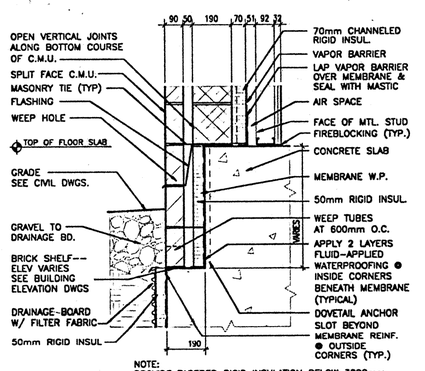

NOTE:
PROVIDE TAPERED RIGID INSULATION BELOW 3800mm FROM GRADE TO PROVIDE TRANSITION FOR DRAINAGE BOARD

2 DETAIL
SCALE 1 : 10 GRADE/BRICK SHELF @ CMU WALLS

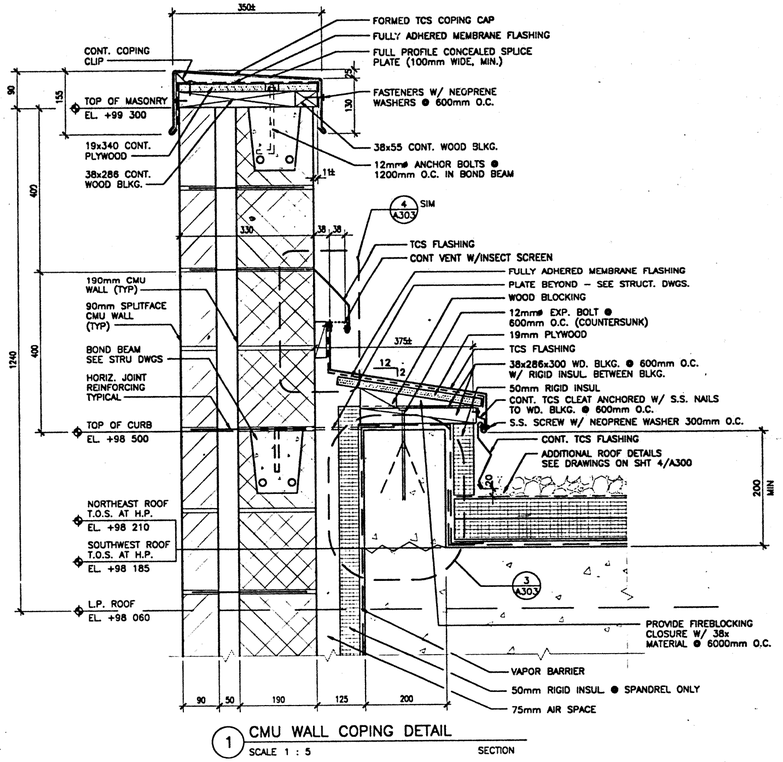

1 CMU WALL COPING DETAIL
SCALE 1 : 5 SECTION

A. CORNER RETURN AT REVEALS

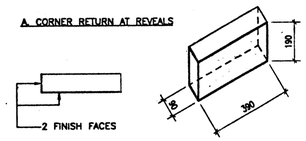

B. TYPE NOT USED

C. BULLNOSE AT NORTH CORNER

NOTE: REFER TO FLOOR PLANS FOR ANGLE @ CORNER

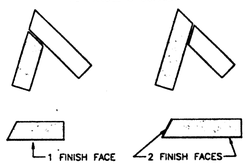

D. SPLIT FACE CMU AT WINDOW AND STOREFRONT JAMBS

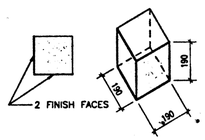

E. SPLIT FACE CMU AT WEST TERRACE CORNER

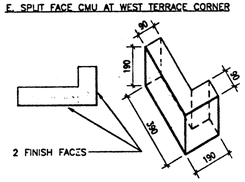

F. RETURN AT SW CORNER ELEVATOR NO.4

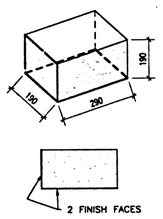

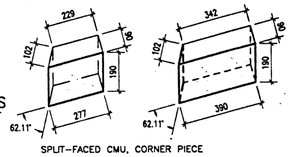

SPLIT-FACED CMU, CORNER PIECE

4 SPLIT FACE BLOCK SPECIAL SHAPES
SCALE 1 : 10

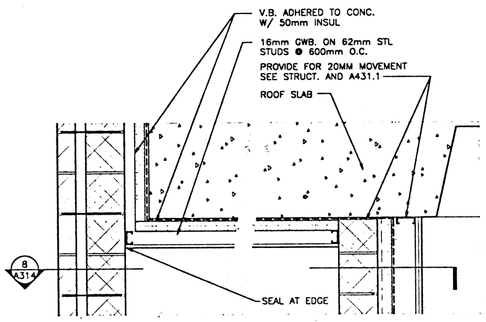

9 SECTION @ TOP OF SHAFT NO. 5
SCALE 1 : 10

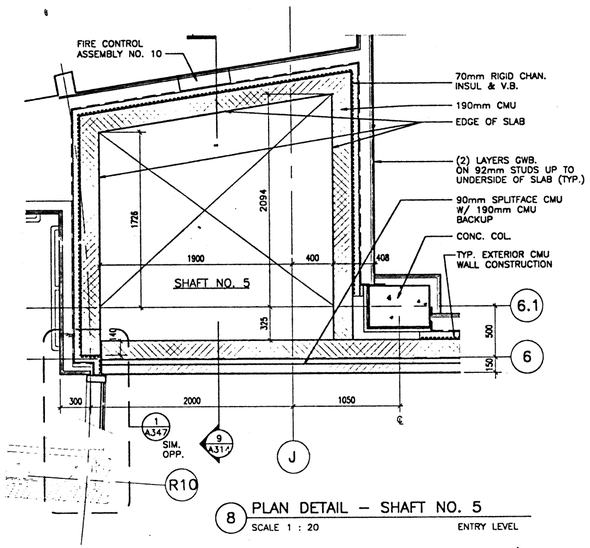

8 PLAN DETAIL - SHAFT NO. 5
SCALE 1 : 20 ENTRY LEVEL

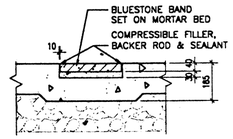

7 BLUESTONE DETAIL
SCALE 1 : 10 INSIDE 60% LINE

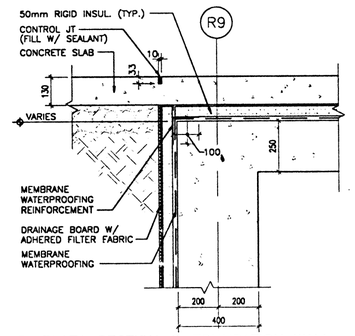

6 PLAZA SECTION @ FOUNDATION WALL
SCALE 1 : 10 OUTSIDE 60% LINE

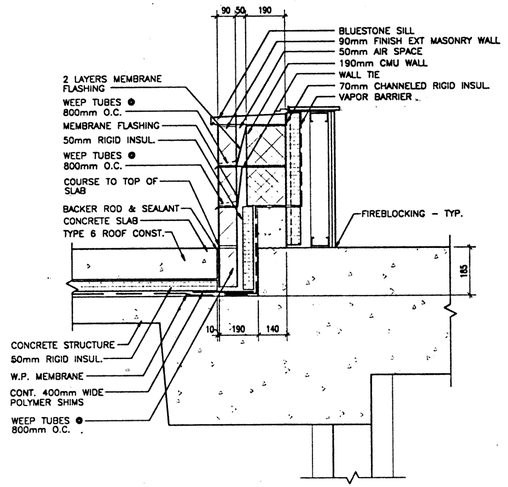

5 SECTION @ SOUTH ENTRY WALL
SCALE 1 : 10

241A314 C:26-95 9:17:25 am EST

NMAI
CULTURAL RESOURCES CENTER

Architect
Polshek Metcalf Tobey and Partners Joint Venture
James Stewart Polshek and Partners
320 West 13 Street
New York, NY 10014
Metcalf Tobey and Partners
1750 Presidents Street
Reston, Virginia 22090

In Association With
Native American Design Collaborative
Louis L. Weller, President
401 Alvarado Drive S.E. - Suite D
Albuquerque, New Mexico 87108

Structural Engineer
Cagley and Associates
6141 Executive Boulevard
Rockville, Maryland 20852

MEP Engineer
Syska and Hennessy, Inc.
11 West 42 Street
New York, New York 10036

(other consultants)

Key Plan

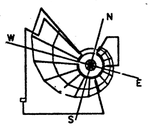

SMITHSONIAN INSTITUTION

Office of Design and Construction
955 L'Enfant Plaza, SW, Suite 3230
Washington, DC 20024

Project No.
ODC No. 912205B

Project Title
CULTURAL RESOURCES CENTER
SUITLAND, MARYLAND

Facility
NATIONAL MUSEUM OF THE AMERICAN INDIAN

Sheet Title
CMU WALL SECTIONS AND DETAILS

Revisions Date

FINAL

Date Issued:	3.31.95	Sheet No.	A314
Scale:	AS NOTED		
Drawn by:			
Checked by:	WK	120 OF 420	

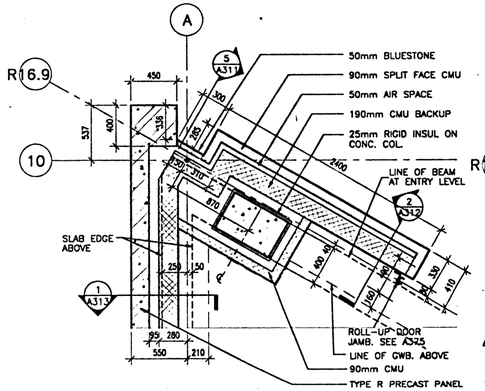

5 N.W. CORNER PLAN DETAIL
SCALE 1 : 20 ● LOWER LEVEL

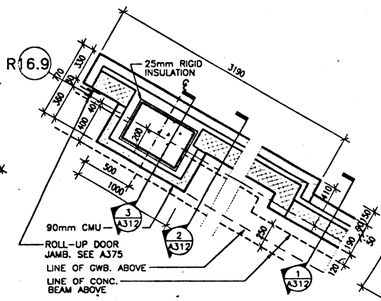

4 PLAN DETAIL – N.W. WALL
SCALE 1 : 20 OVERSIZE ACCESS

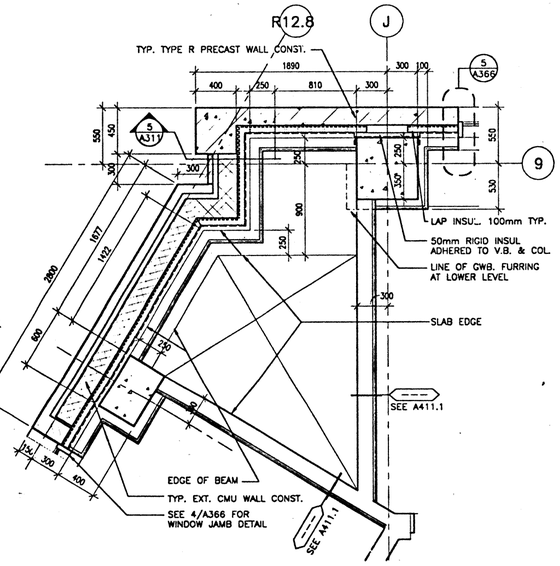

3 CORNER / SHAFT PLAN DETAIL
SCALE 1 : 20 ● ENTRY LEVEL

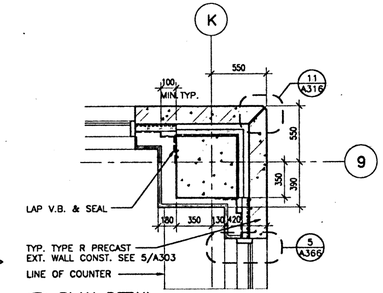

1 PLAN DETAIL
SCALE 1 : 20

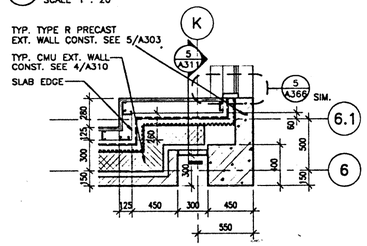

2 SOUTH ENTRY WALL CORNER DETAIL
SCALE 1 : 20 PLAN DETAIL

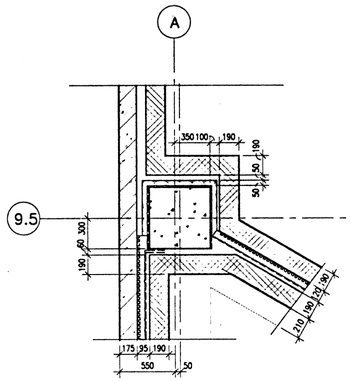

10 N.W. CORNER PLAN DETAIL
SCALE 1 : 20

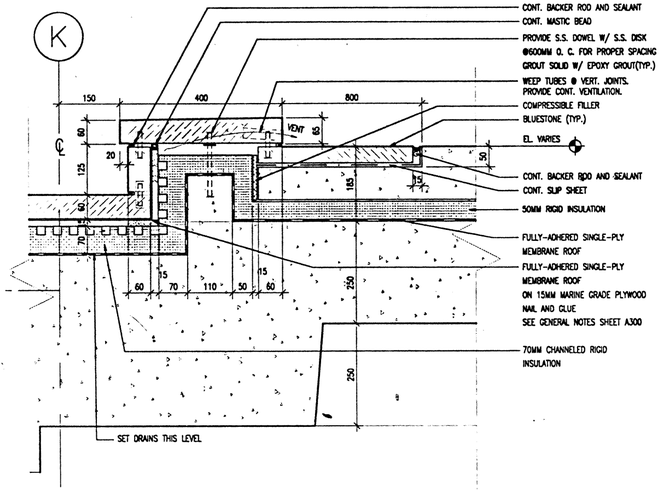

9 WATER FEATURE SECTION
SCALE 1 : 5

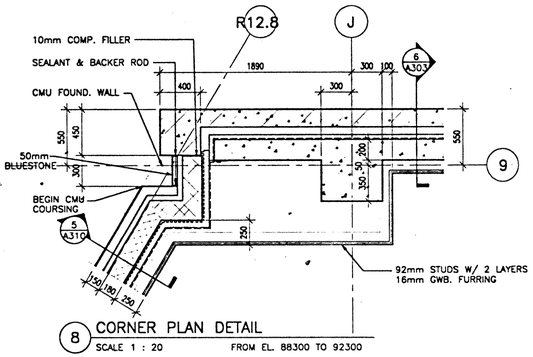

8 CORNER PLAN DETAIL
SCALE 1 : 20 FROM EL. 88300 TO 92300

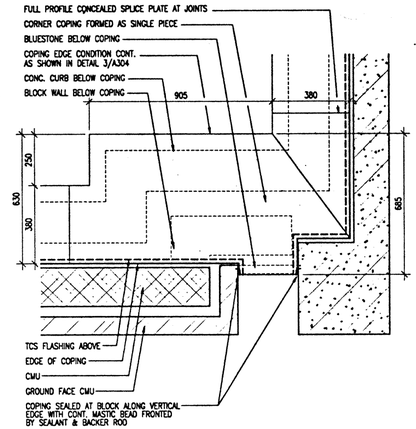

7 SOUTH ENTRY WALL COPING DETAIL
SCALE 1 : 10 PLAN DETAIL

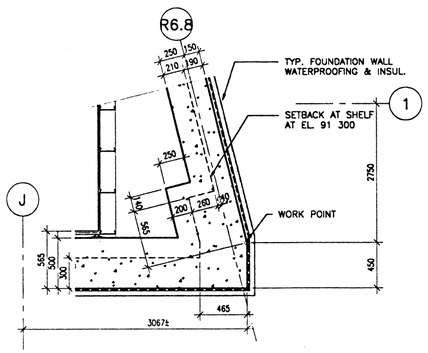

14 SOUTH-EAST CORNER PLAN DETAIL
SCALE 1 : 20 ● LOWER LEVEL

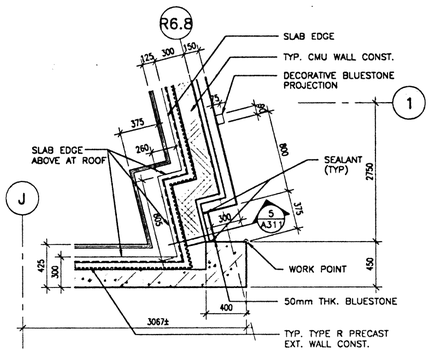

13 SOUTH-EAST CORNER PLAN DETAIL
SCALE 1 : 20 ● ENTRY LEVEL

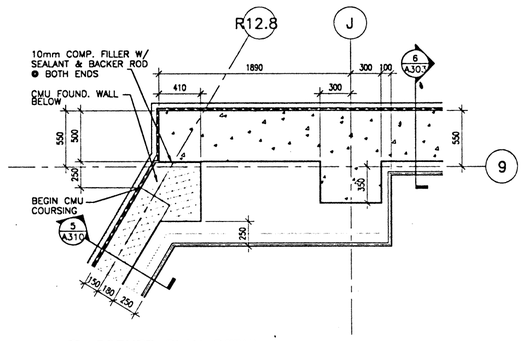

12 CORNER PLAN DETAIL
SCALE 1 : 20 FROM EL. 86500 TO 88300

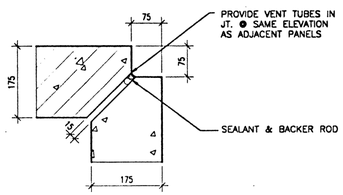

11 CORNER DETAIL
SCALE 1 : 5 PRECAST PANEL INTERSECTION

241A316 6-26-95 9:59:07 am EST

NMAI
CULTURAL RESOURCES CENTER

Architect
Polshek Metcalf Tobey and Partners Joint Venture

James Stewart Polshek and Partners
320 West 13 Street
New York, NY 10014

Metcalf Tobey and Partners
1750 Presidents Street
Reston, Virginia 22090

In Association With
Native American Design Collaborative

Louis L. Weller, President
401 Alvarado Drive S.E. – Suite D
Albuquerque, New Mexico 87108

Structural Engineer
Cagley and Associates
6141 Executive Boulevard
Rockville, Maryland 20852

MEP Engineer
Syska and Hennessy, Inc.
11 West 42 Street
New York, New York 10036

(other consultants)

Key Plan

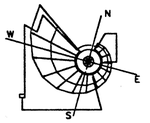

SMITHSONIAN INSTITUTION

Office of Design and Construction
955 L'Enfant Plaza, SW, Suite 3230
Washington, DC 20024

Project No.
ODC No. 912205B

Project Title
CULTURAL RESOURCES CENTER
SUITLAND, MARYLAND

Facility
NATIONAL MUSEUM OF THE AMERICAN INDIAN

Sheet Title
PLAN DETAILS

Revisions Date

FINAL

Date Issued:	3.31.95	Sheet No.	●
Scale:	VARIES		A316
Drawn by:			
Checked by:	WK	121 OF 420	

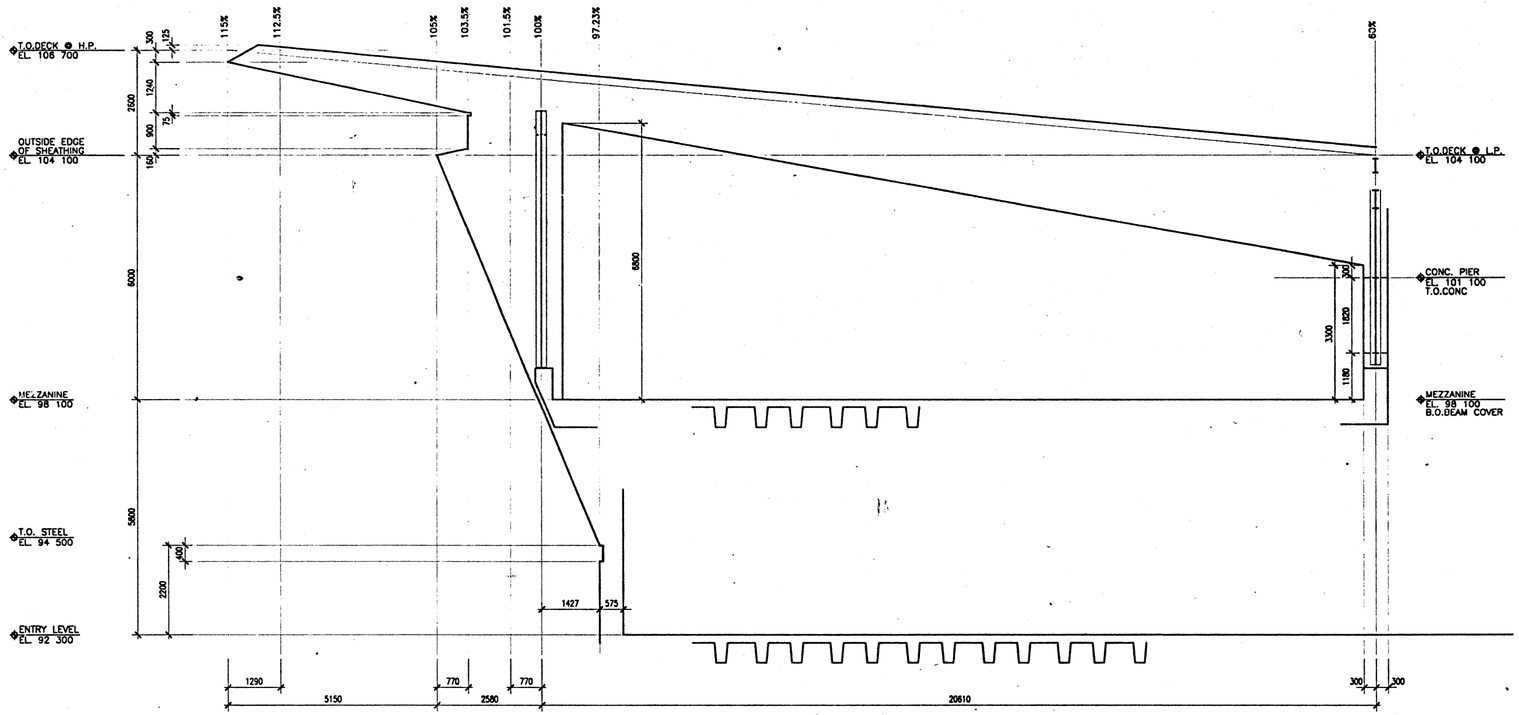

2 PROJECTED WORKPOINT SECTION AT RIB 16
SCALE 1 : 50

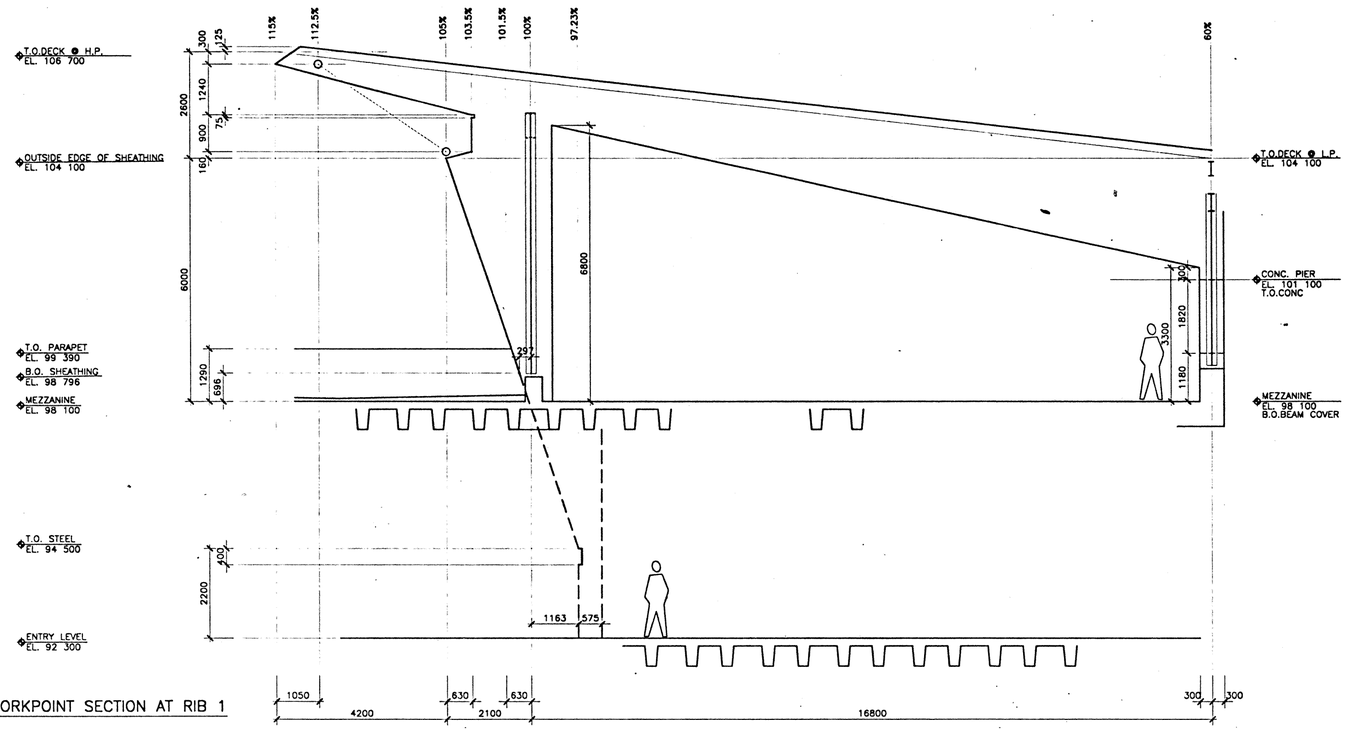

3 PROJECTED WORKPOINT SECTION AT RIB 1
SCALE 1 : 50

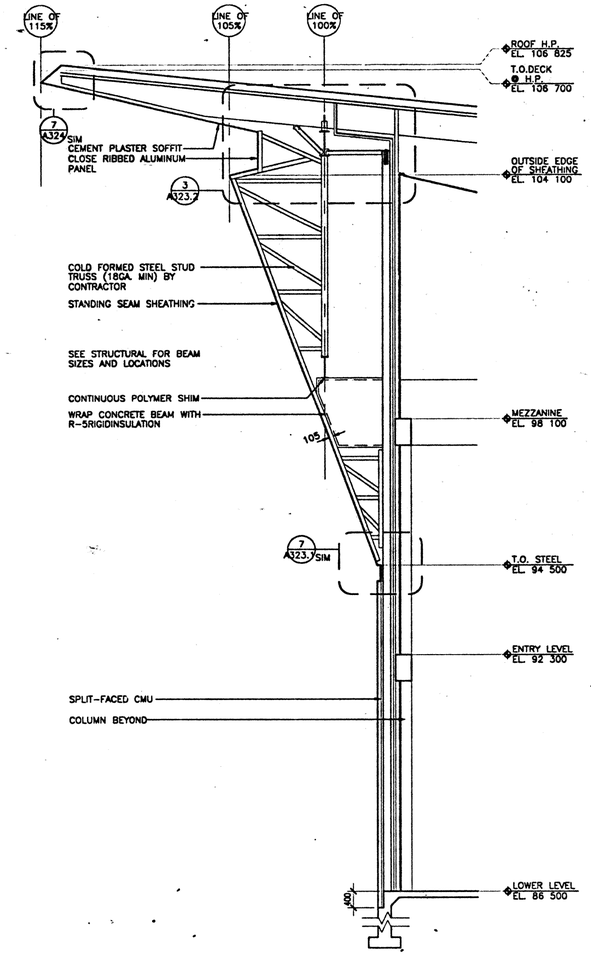

1 SECTION NW WALL BETWEEN R1 AND R16
SCALE 1 : 50

GENERAL NOTE FOR WORKPOINT SECTIONS:
WORKPOINT SECTIONS ARE FOR LAYOUT PURPOSES ONLY. HORIZONTAL LINES PROJECTED FROM RIB TO RIB DEFINE THE OUTBOARD SURFACE OF THE SHEATHING FOR METAL WALL SYSTEMS.
TYP FOR ALL WORKPOINT SECTIONS.
SEE 9 A325

241A320 6-26-95 10:00:51 am EST

NMAI
CULTURAL RESOURCES CENTER

Architect
Polshek Metcalf Tobey and Partners Joint Venture
James Stewart Polshek and Partners
320 West 13 Street
New York, NY 10014
Metcalf Tobey and Partners
1750 Presidents Street
Reston, Virginia 22090

In Association With
Native American Design Collaborative
Louis L. Weller, President
401 Alvarado Drive S.E. – Suite D
Albuquerque, New Mexico 87108

Structural Engineer
Cagley and Associates
6141 Executive Boulevard
Rockville, Maryland 20852

MEP Engineer
Syska and Hennessy, Inc.
11 West 42 Street
New York, New York 10036

(other consultants)

Key Plan

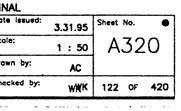

SMITHSONIAN INSTITUTION

Office of Design and Construction
955 L'Enfant Plaza, SW, Suite 3230
Washington, DC 20024

Project No.
ODC No. 912205B

Project Title
CULTURAL RESOURCES CENTER
SUITLAND, MARYLAND

Facility
NATIONAL MUSEUM OF THE AMERICAN INDIAN

Sheet Title
WORKPOINT SECTIONS AT MEZZANINE

Revisions — Date

FINAL

Date Issued:	3.31.95	Sheet No.	A320
Scale:	1 : 50		
Drawn by:	AC		
Checked by:	WMK	122 OF 420	

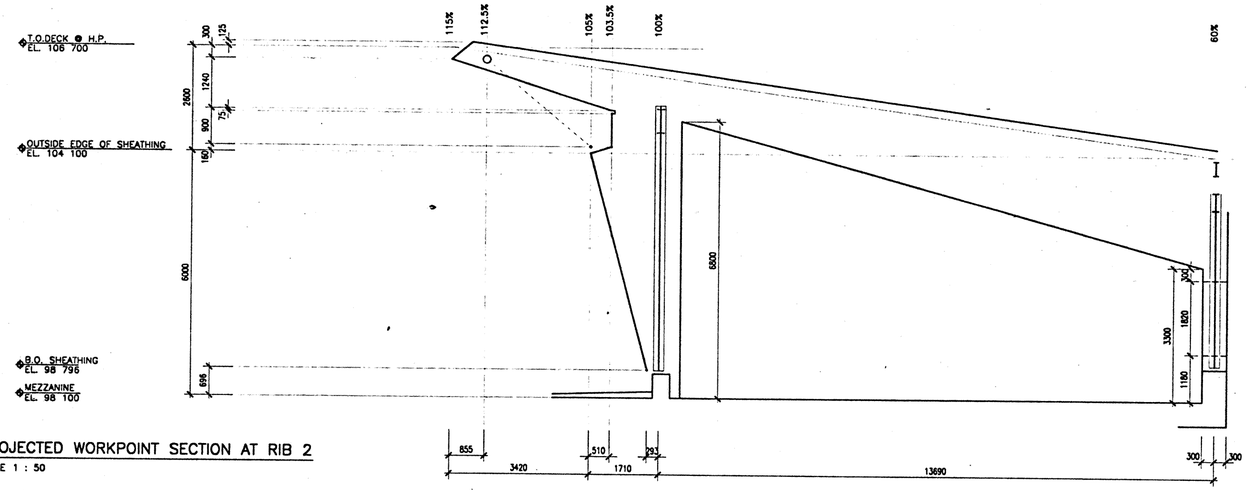

2 PROJECTED WORKPOINT SECTION AT RIB 2
SCALE 1 : 50

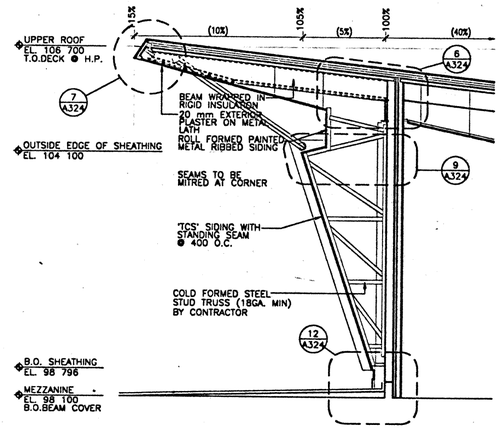

1 TYPICAL SECTION/ELEVATION BETWEEN RIBS 1–7
SCALE 1 : 50

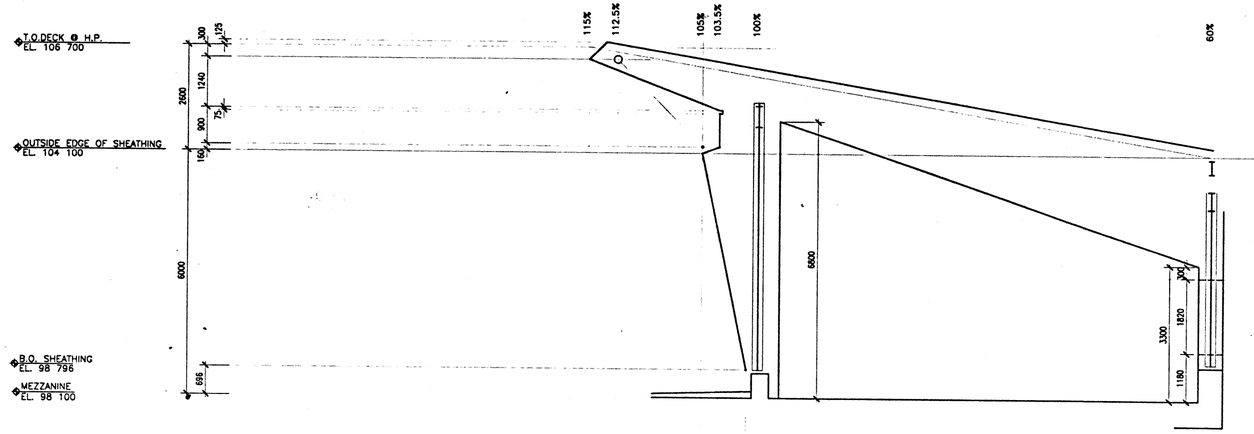

4 PROJECTED WORKPOINT SECTION AT RIB 3
SCALE 1 : 50

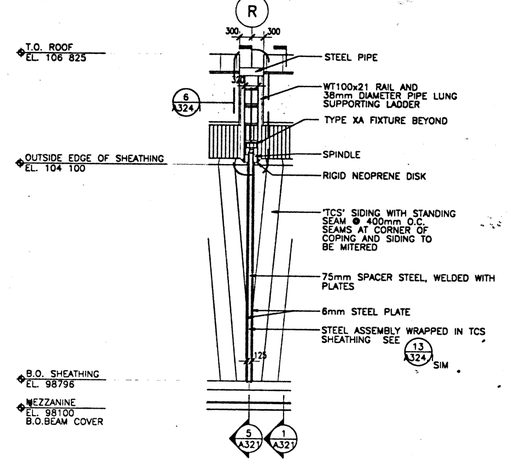

3 TYPICAL SECTION/ELEVATION AT BRACKET AT RIBS 1–6
SCALE 1 : 50

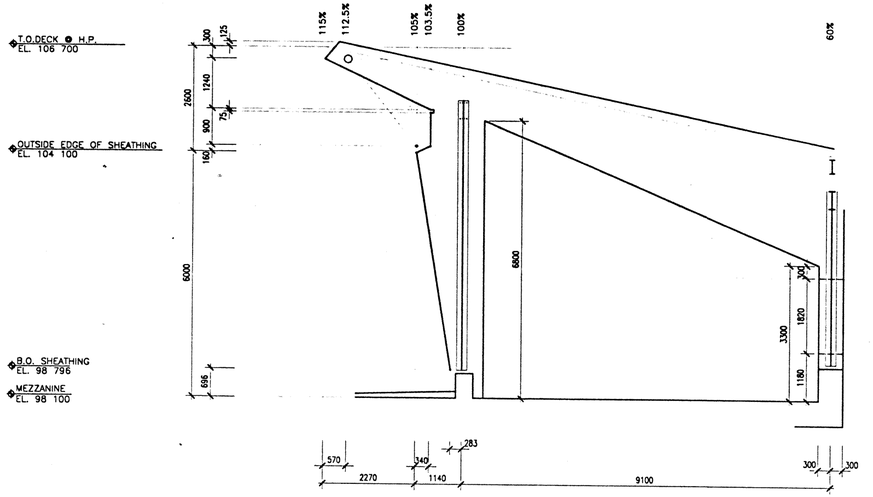

6 PROJECTED WORKPOINT SECTION AT RIB 4
SCALE 1 : 50

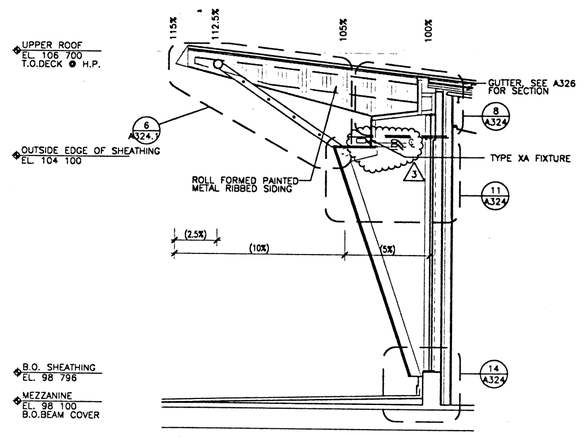

5 TYPICAL SECTION/ELEVATION AT BRACKET AT RIBS 1–6
SCALE 1 : 50

241A321 10-2-96 6:12:56 pm EST

NMAI
CULTURAL RESOURCES CENTER

Architect
Polshek Metcalf Tobey and Partners Joint Venture

James Stewart Polshek and Partners
320 West 13 Street
New York, NY 10014

Metcalf Tobey and Partners
1750 Presidents Street
Reston, Virginia 22090

In Association With
Native American Design Collaborative
Louis L. Weller, President
401 Alvarado Drive S.E. – Suite D
Albuquerque, New Mexico 87108

Structural Engineer
Cagley and Associates
6141 Executive Boulevard
Rockville, Maryland 20852

MEP Engineer
Syska and Hennessy, Inc.
11 West 42 Street
New York, New York 10036

(other consultants)

Key Plan

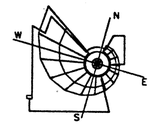

SMITHSONIAN INSTITUTION

Office of Design and Construction
955 L'Enfant Plaza, SW, Suite 3230
Washington, DC 20024

Project No.
ODC No. 912205B

Project Title
CULTURAL RESOURCES CENTER
SUITLAND, MARYLAND

Facility
NATIONAL MUSEUM OF THE AMERICAN INDIAN

Sheet Title
SECTIONS, ELEVATIONS
WORKPOINT SECTIONS
AT MEZZANINE

Revisions	Date
01 – AMENDMENT / 1 THROUGH / 8	9.30.96

FINAL

Date Issued:	3.31.95	Sheet No.	A321
Scale:	1 : 50		
Drawn by:	AC		
Checked by:	WWK	123 OF 420	

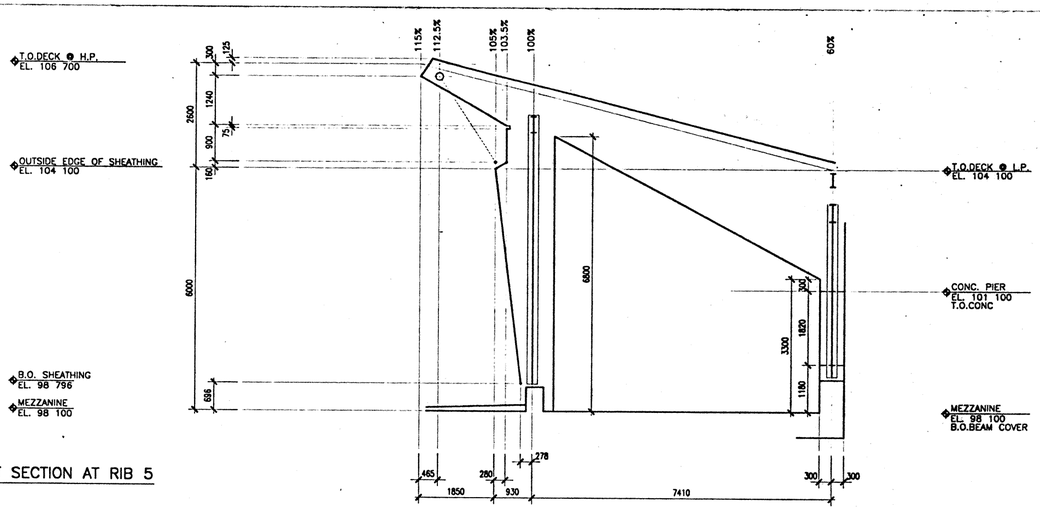

1 PROJECTED WORKPOINT SECTION AT RIB 5
SCALE 1 : 50

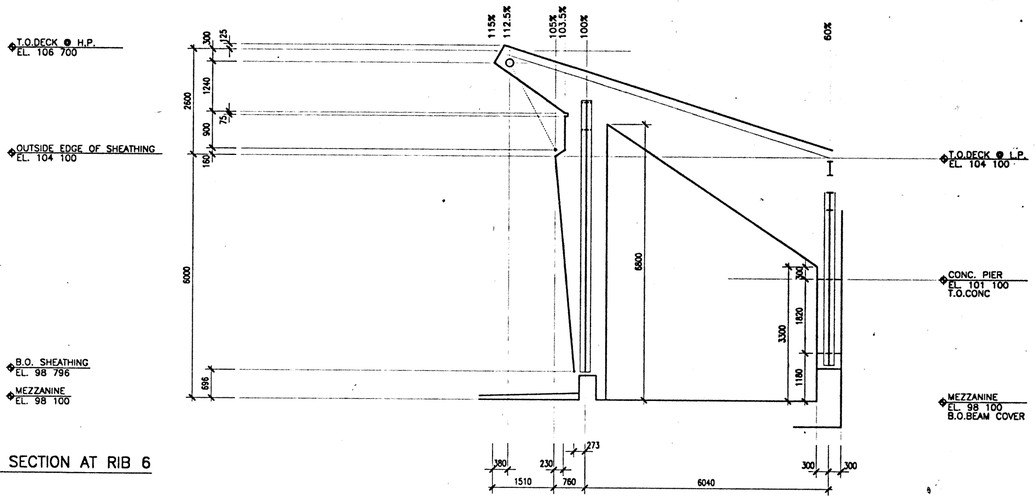

4 PROJECTED WORKPOINT SECTION AT RIB 6
SCALE 1 : 50

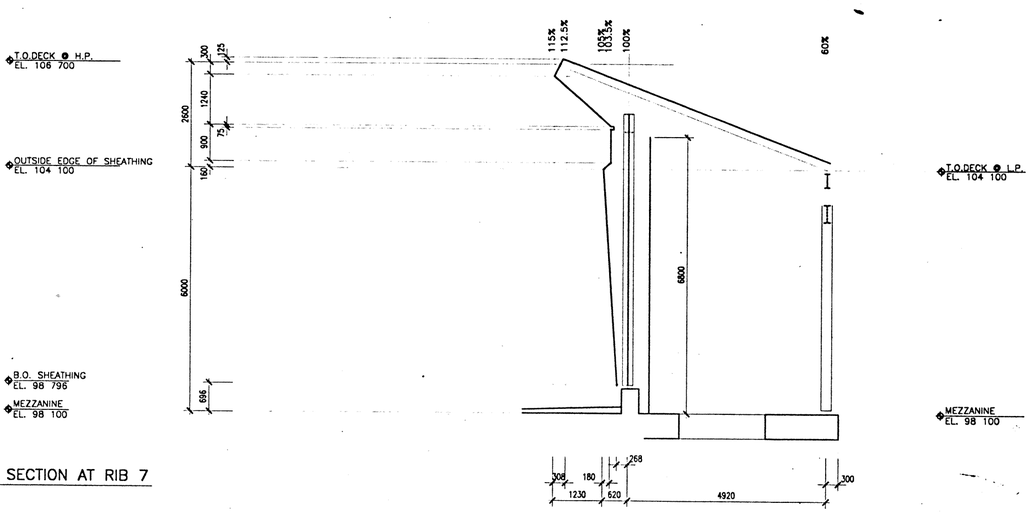

7 PROJECTED WORKPOINT SECTION AT RIB 7
SCALE 1 : 50

241A322 4-3-95 10:00:59 am EST

NMAI
CULTURAL RESOURCES CENTER

Architect
Polshek Metcalf Tobey and Partners Joint Venture

James Stewart Polshek and Partners
320 West 13 Street
New York, NY 10014

Metcalf Tobey and Partners
1750 Presidents Street
Reston, Virginia 22090

In Association With
Native American Design Collaborative
Louis L. Weller, President
401 Alvarado Drive S.E. - Suite D
Albuquerque, New Mexico 87108

Structural Engineer
Cagley and Associates
6141 Executive Boulevard
Rockville, Maryland 20852

MEP Engineer
Syska and Hennessy, Inc.
11 West 42 Street
New York, New York 10036

(other consultants)

Key Plan

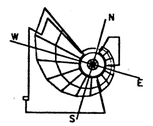

SMITHSONIAN INSTITUTION

Office of Design and Construction
955 L'Enfant Plaza, SW, Suite 3230
Washington, DC 20024

Project No.
ODC No. 912205B

Project Title
CULTURAL RESOURCES CENTER
SUITLAND, MARYLAND

Facility
NATIONAL MUSEUM OF THE AMERICAN INDIAN

Sheet Title
WORKPOINT SECTIONS AT MEZZANINE

Revisions Date

FINAL

Date Issued:	3.31.95	Sheet No.	A322
Scale:	1 : 50		
Drawn by:	AC		
Checked by:	WMK	124 OF 420	

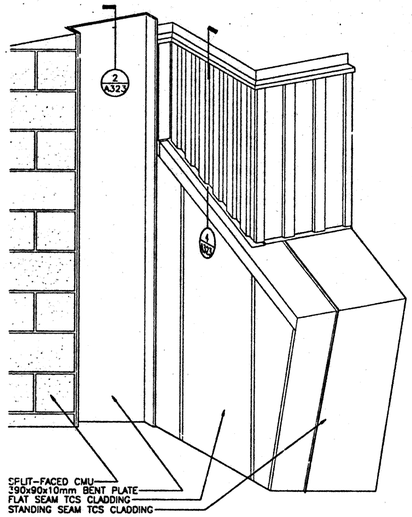

5 ELEV DETAIL VERTICAL CHANNEL
SCALE 1 : 10 NORTH WALL

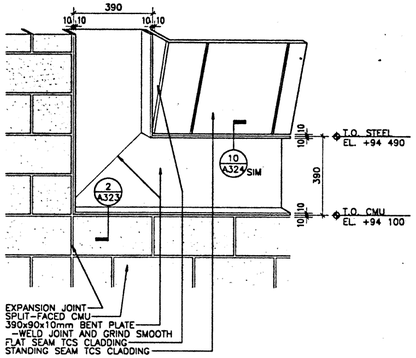

6 ELEV DETAIL VERTICAL CHANNEL
SCALE 1 : 10

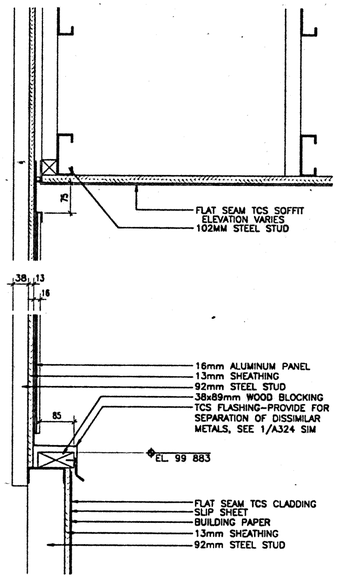

4 SILL AT ALUMINUM AND TCS
SCALE 1 : 5

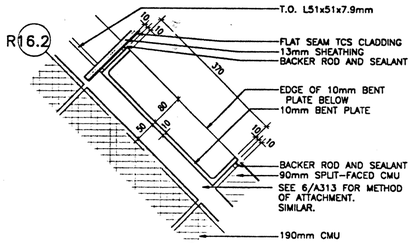

3 PLAN DETAIL AT BENT PLATE CHANNEL
SCALE 1 : 5

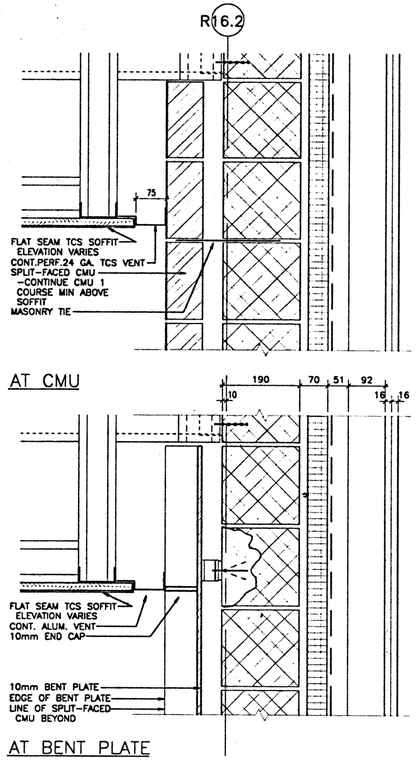

2 SECT DET @ VERT CHANNEL & MASONRY
SCALE 1 : 5

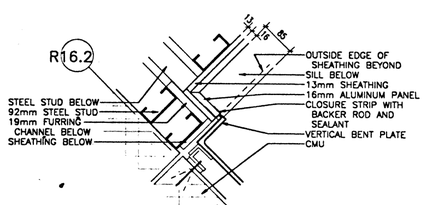

8 PLAN DETAIL ALUM BAND @ VERT CHANNEL
SCALE 1 : 5 EL. ABOVE TCS "SHELF"

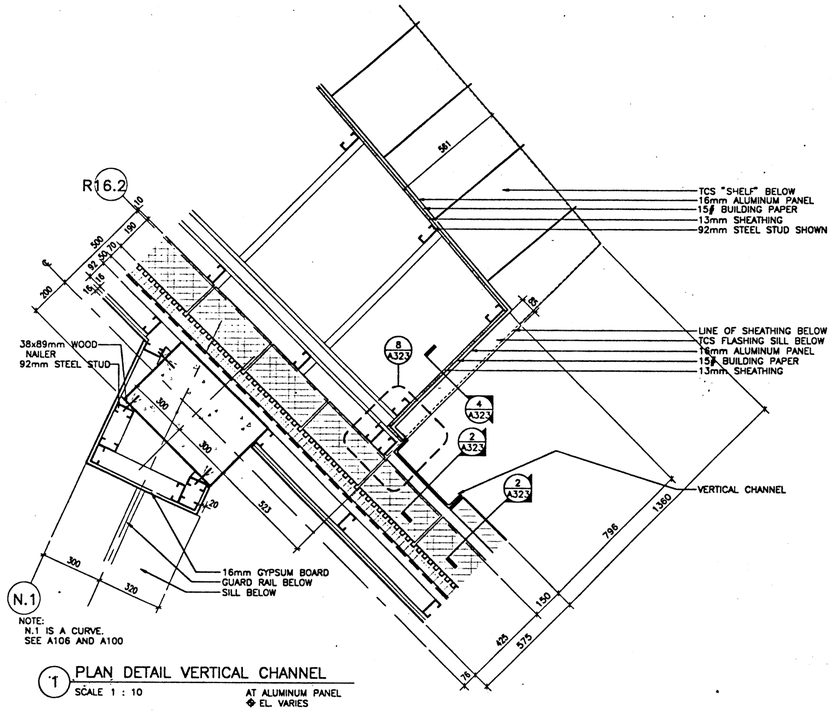

1 PLAN DETAIL VERTICAL CHANNEL
SCALE 1 : 10 AT ALUMINUM PANEL
◆ EL. VARIES

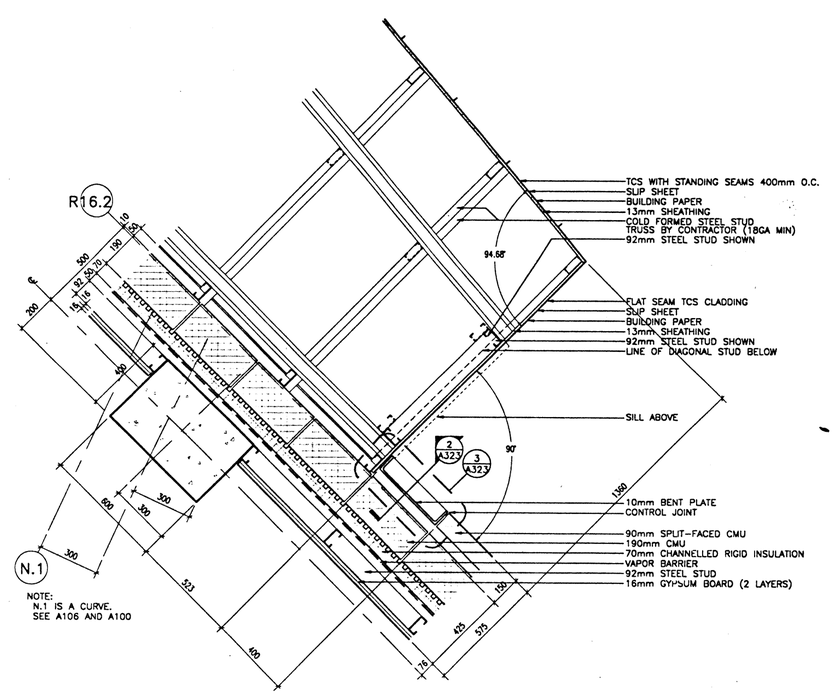

7 PLAN DETAIL VERTICAL CHANNEL
SCALE 1 : 10 JUST BELOW TCS "SHELF" ◆ EL. VARIES

241A323 6-26-95 10:02:53 (-5 EST

NMAI
CULTURAL RESOURCES CENTER

Architect
Polshek Metcalf Tobey and Partners Joint Venture
James Stewart Polshek and Partners
320 West 13 Street
New York, NY 10014
Metcalf Tobey and Partners
1750 Presidents Street
Reston, Virginia 22090
In Association With
Native American Design Collaborative
Louis L. Weller, President
401 Alvarado Drive S.E. – Suite D
Albuquerque, New Mexico 87108
Structural Engineer
Cagley and Associates
6141 Executive Boulevard
Rockville, Maryland 20852
MEP Engineer
Syska and Hennessy, Inc.
11 West 42 Street
New York, New York 10036
(other consultants)

Key Plan

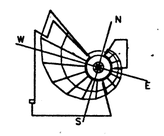

SMITHSONIAN INSTITUTION

Office of Design and Construction
955 L'Enfant Plaza, SW, Suite 3230
Washington, DC 20024

Project No.
ODC No. 912205B

Project Title
CULTURAL RESOURCES CENTER
SUITLAND, MARYLAND

Facility
NATIONAL MUSEUM OF THE AMERICAN INDIAN

Sheet Title
DETAILS
NORTH WALL, MEZZANINE

Revisions Date

FINAL

Date Issued:	3.31.95	Sheet No.	A323
Scale:	AS SHOWN		
Drawn by:	AC		
Checked by:	WWK	125	420

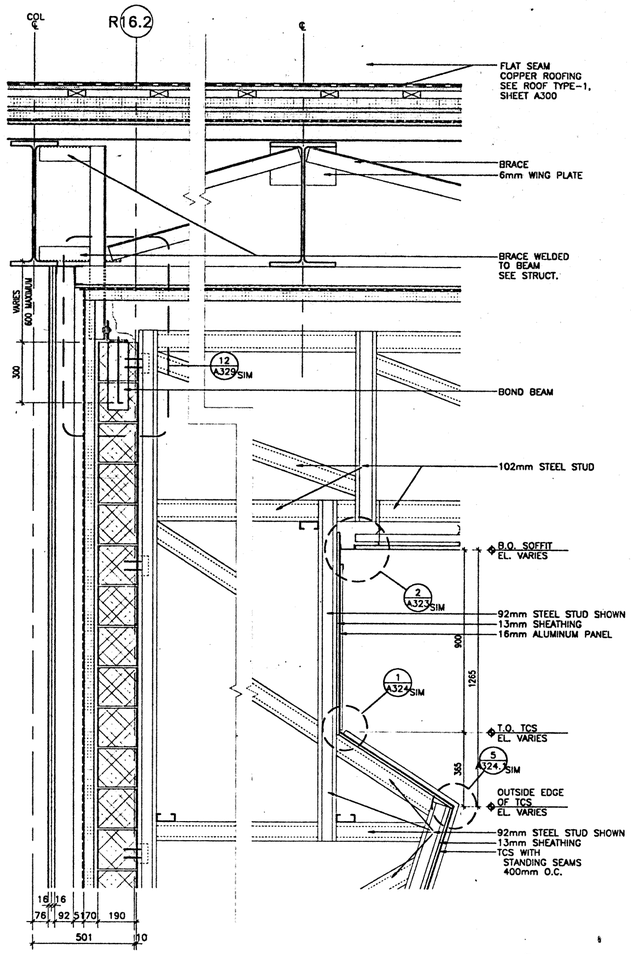

4 SECTION DETAIL AT TCS SHELF
SCALE 1 : 10 NORTH WALL

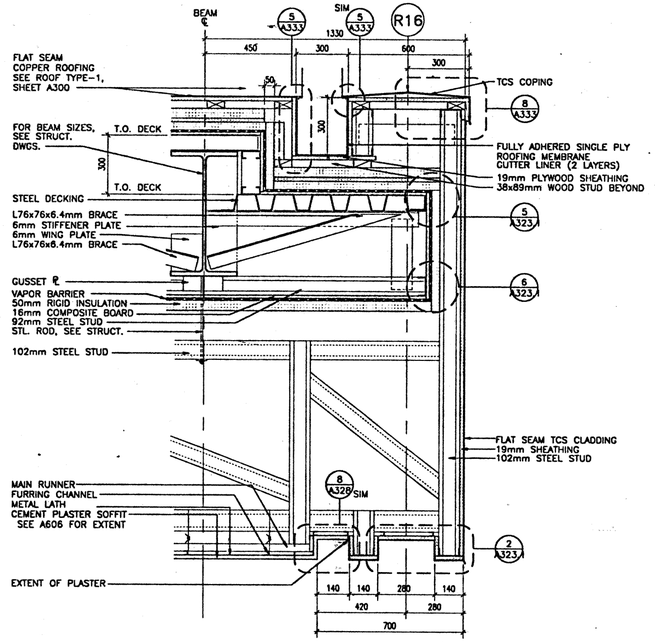

3 SECTION DETAIL AT EDGE OF ROOF
SCALE 1 : 10 NORTH WALL

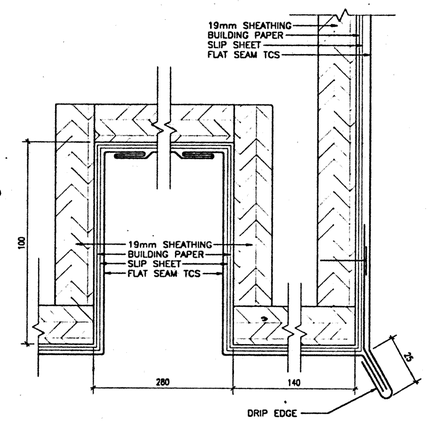

2 DETAILS TCS
SCALE 1 : 1 SOFFIT AT R16

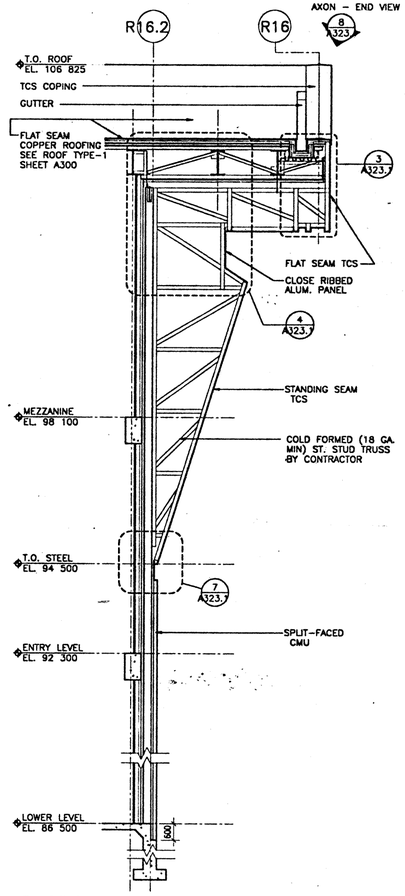

1 SECTION @ NORTH WALL
SCALE 1 : 50

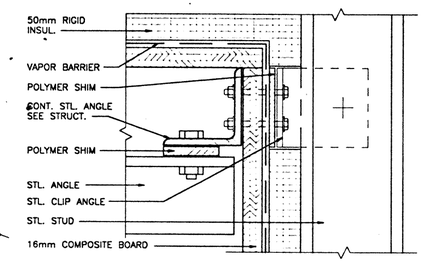

5 THERMAL BREAK CONN. @ ROOF
SCALE 1 : 2 TYPICAL

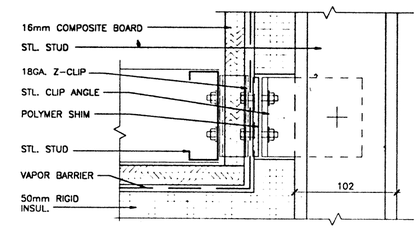

6 THERMAL BREAK CONN. @ ROOF
SCALE 1 : 2 TYPICAL

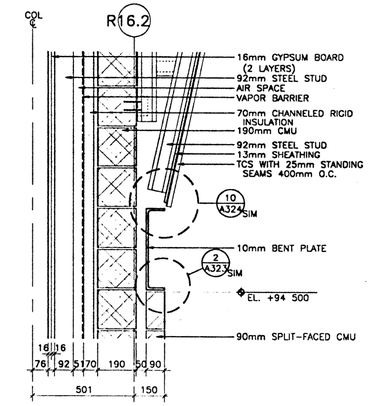

7 SECTION DETAIL AT HORIZ CHANNEL
SCALE 1 : 10 NORTH WALL

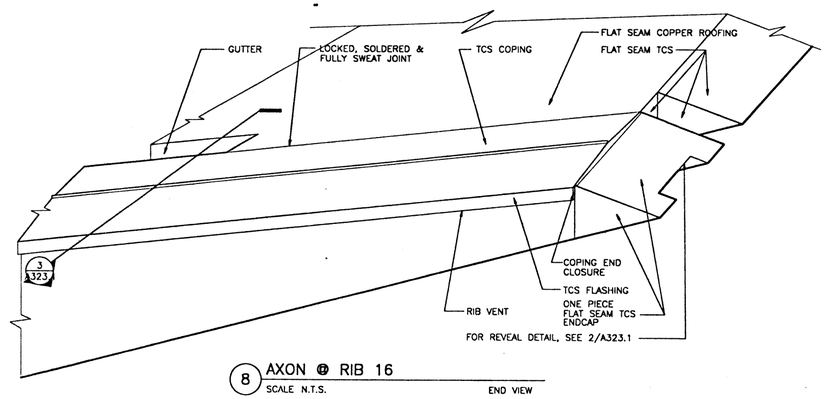

8 AXON @ RIB 16
SCALE N.T.S. END VIEW

241A3231 4-3-95 IC6351 on EST

NMAI
CULTURAL RESOURCES CENTER

Architect
Polshek Metcalf Tobey and Partners Joint Venture
James Stewart Polshek and Partners
320 West 13 Street
New York, NY 10014
Metcalf Tobey and Partners
1750 Presidents Street
Reston, Virginia 22090
In Association With
Native American Design Collaborative
Louis L. Weller, President
401 Alvarado Drive S.E. – Suite D
Albuquerque, New Mexico 87108
Structural Engineer
Cagley and Associates
6141 Executive Boulevard
Rockville, Maryland 20852
MEP Engineer
Syska and Hennessy, Inc.
11 West 42 Street
New York, New York 10036
(other consultants)

Key Plan

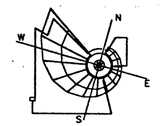

SMITHSONIAN INSTITUTION

Office of Design and Construction
955 L'Enfant Plaza, SW, Suite 3230
Washington, DC 20024

Project No.
ODC No. 912205B

Project Title
CULTURAL RESOURCES CENTER
SUITLAND, MARYLAND

Facility
NATIONAL MUSEUM OF THE AMERICAN INDIAN

Sheet Title
NW MEZZANINE WALL SECTION, DETAILS

Revisions Date

FINAL

Date Issued: 3.31.95	Sheet No.
Scale: AS SHOWN	A323.1
Drawn by: AC/DL	
Checked by: WWK	126 OF 420

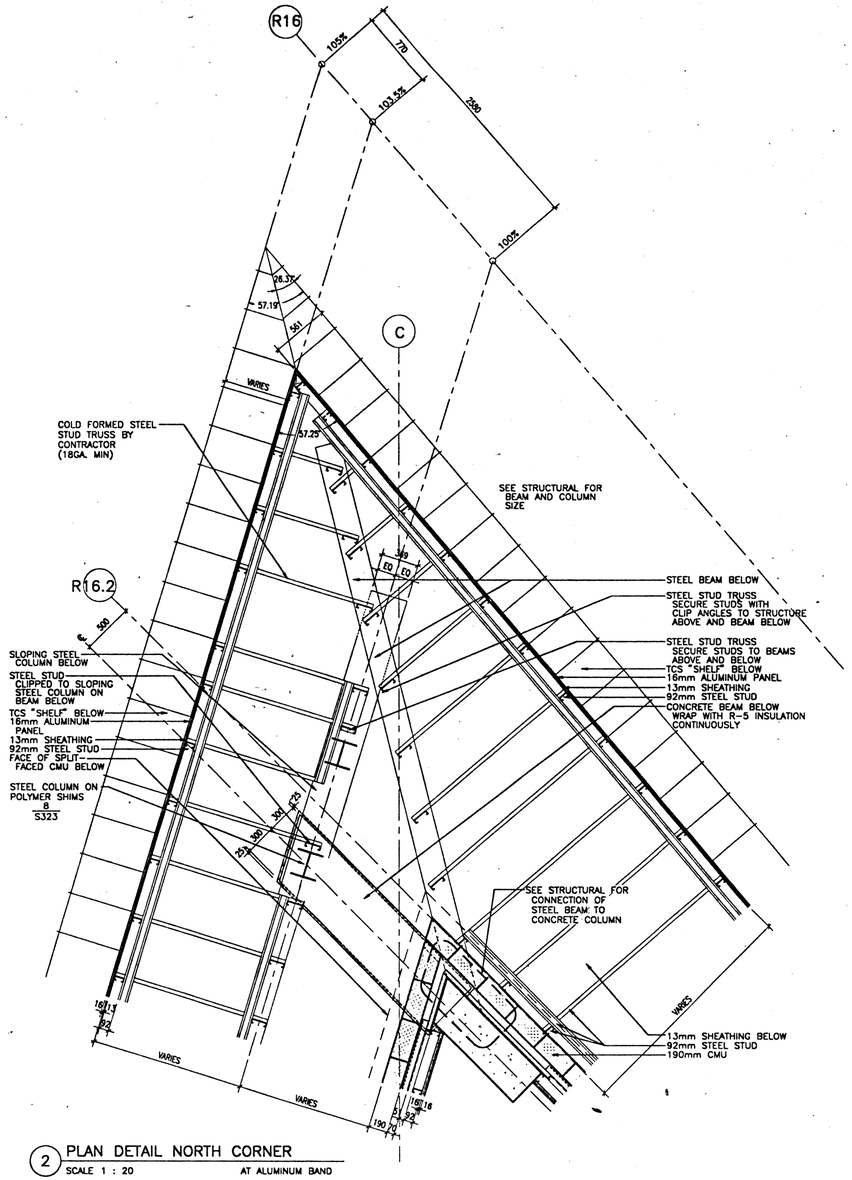

2 PLAN DETAIL NORTH CORNER
SCALE 1 : 20 AT ALUMINUM BAND

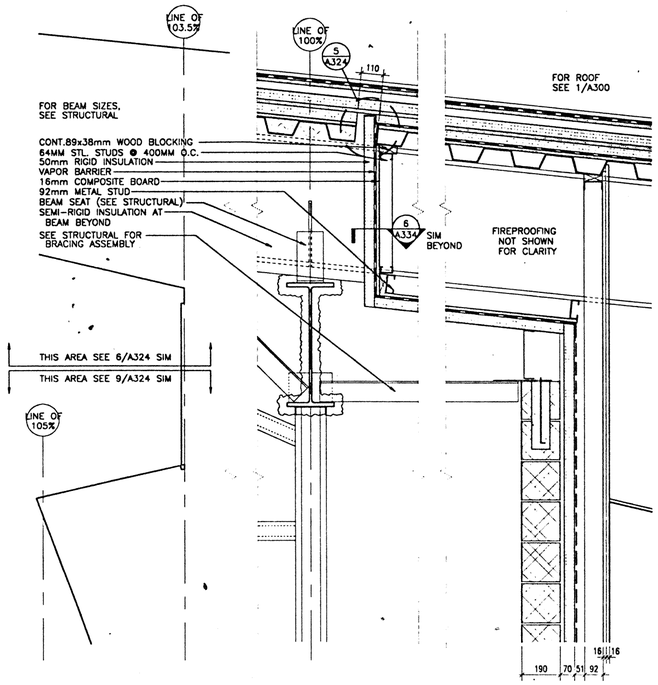

3 SECTION DETAIL AT TCS "SHELF"
SCALE 1 : 10 NW WALL

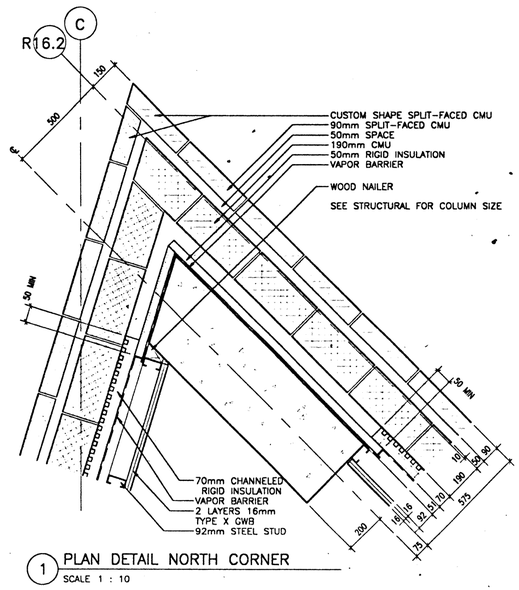

1 PLAN DETAIL NORTH CORNER
SCALE 1 : 10

241A3232 4-3-95 13:56:06 on EST

NMAI
CULTURAL RESOURCES CENTER

Architect

Polshek Metcalf Tobey and Partners Joint Venture

James Stewart Polshek and Partners
320 West 13 Street
New York, NY 10014

Metcalf Tobey and Partners
1750 Presidents Street
Reston, Virginia 22090

In Association With

Native American Design Collaborative
Louis L. Weller, President
401 Alvarado Drive S.E. – Suite D
Albuquerque, New Mexico 87108

Structural Engineer

Cagley and Associates
6141 Executive Boulevard
Rockville, Maryland 20852

MEP Engineer

Syska and Hennessy, Inc.
11 West 42 Street
New York, New York 10036

(other consultants)

Key Plan

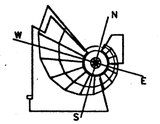

SMITHSONIAN INSTITUTION

Office of Design and Construction
955 L'Enfant Plaza, SW, Suite 3230
Washington, DC 20024

Project No.
ODC No. 912205B

Project Title
CULTURAL RESOURCES CENTER
SUITLAND, MARYLAND

Facility
NATIONAL MUSEUM OF THE AMERICAN INDIAN

Sheet Title
DETAILS
NORTHWEST CORNER
MEZZANINE

Revisions Date

FINAL

Date issued:	3.31.95	Sheet No.	A323.2
Scale:	AS SHOWN		
Drawn by:	AC		
Checked by:	WWK	127 OF 420	

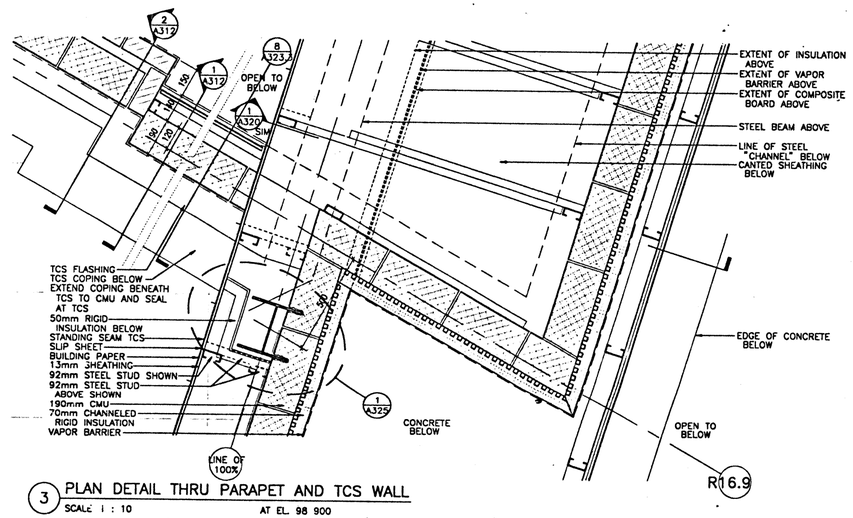

3 PLAN DETAIL THRU PARAPET AND TCS WALL
SCALE 1 : 10 AT EL. 98 900

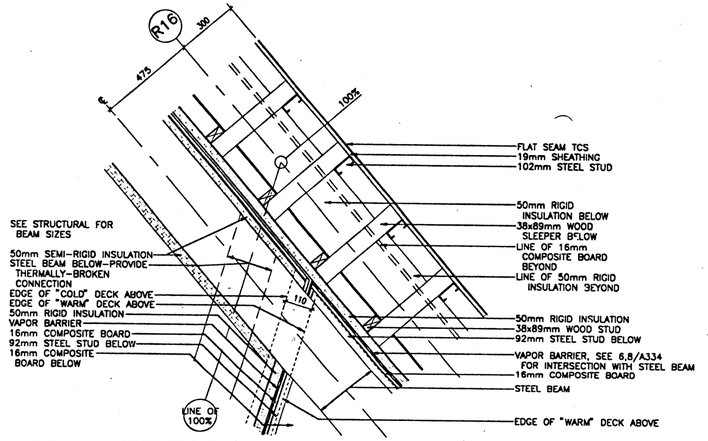

2 PLAN DETAIL VAPOR BARRIER AT DECK SPLIT
SCALE 1 : 10 AT R16

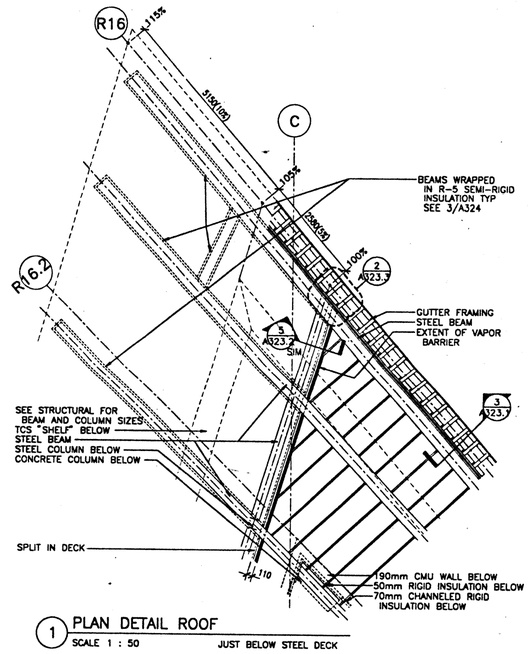

1 PLAN DETAIL ROOF
SCALE 1 : 50 JUST BELOW STEEL DECK

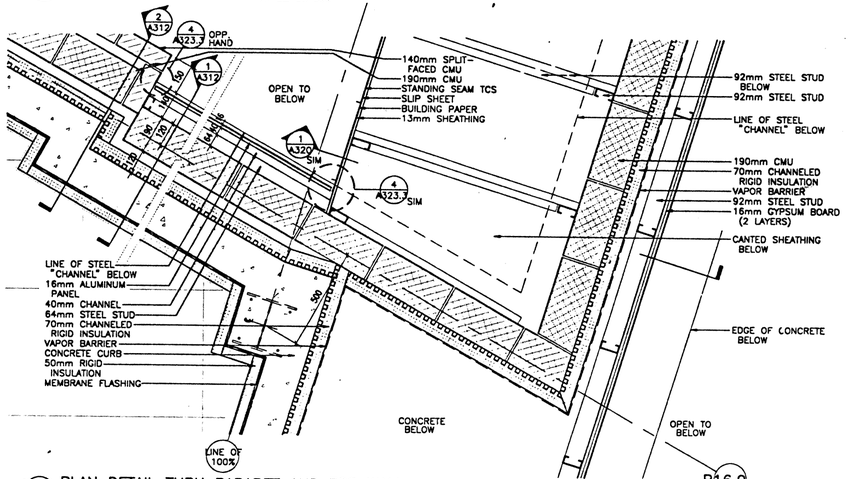

7 PLAN DETAIL THRU PARAPET AND TCS WALL
SCALE 1 : 10 AT EL. 98 300

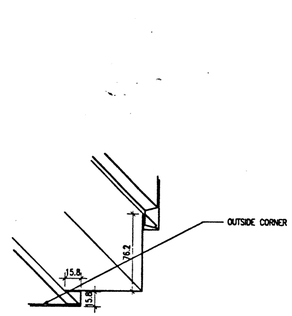

6 INSIDE CORNER POST
SCALE 1 : 2

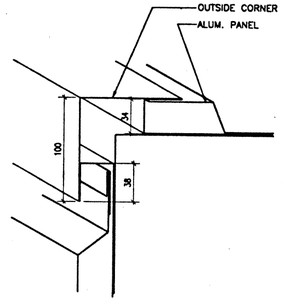

5 OUTSIDE CORNER POST
SCALE 1 : 2

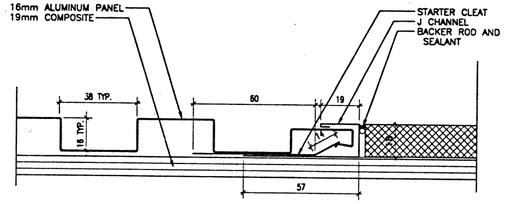

4 TYPICAL ENDWALL DETAIL
SCALE 1 : 1

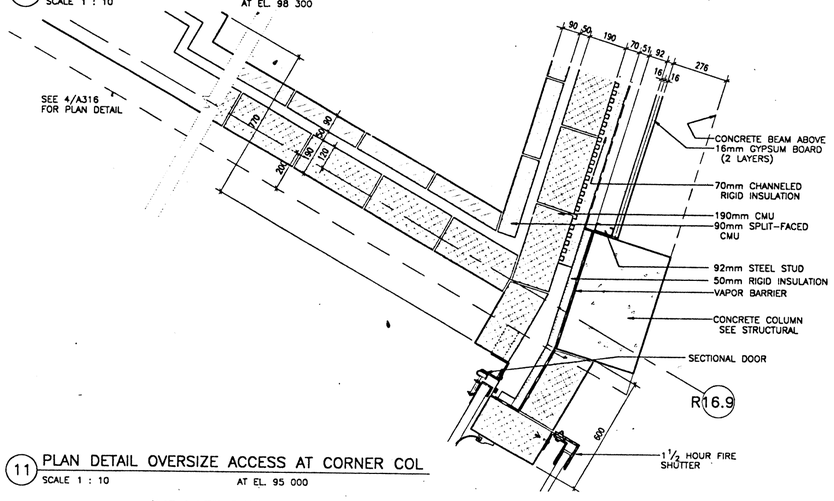

11 PLAN DETAIL OVERSIZE ACCESS AT CORNER COL
SCALE 1 : 10 AT EL. 95 000

241A3233 6-26-95 10:04:30 am EST

NMAI
CULTURAL RESOURCES CENTER

Architect
Polshek Metcalf Tobey and Partners Joint Venture

James Stewart Polshek and Partners
320 West 13 Street
New York, NY 10014

Metcalf Tobey and Partners
1750 Presidents Street
Reston, Virginia 22090

In Association With
Native American Design Collaborative
Louis L. Weller, President
401 Alvarado Drive S.E. – Suite D
Albuquerque, New Mexico 87108

Structural Engineer
Cagley and Associates
6141 Executive Boulevard
Rockville, Maryland 20852

MEP Engineer
Syska and Hennessy, Inc.
11 West 42 Street
New York, New York 10036

(other consultants)

Key Plan

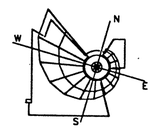

SMITHSONIAN INSTITUTION

Office of Design and Construction
955 L'Enfant Plaza, SW, Suite 3230
Washington, DC 20024

Project No.
ODC No. 912205B

Project Title
CULTURAL RESOURCES CENTER
SUITLAND, MARYLAND

Facility
NATIONAL MUSEUM OF THE AMERICAN INDIAN

Sheet Title
DETAILS

Revisions Date

FINAL

Date Issued:	3.31.95	Sheet No.	A323.3
Scale:	AS SHOWN		
Drawn by:	AC		
Checked by:	WWK	128 OF 420	

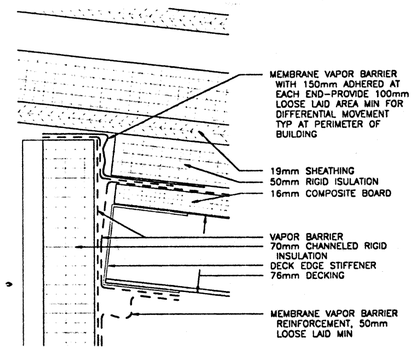

5 SECTION DETAIL
SCALE 1 : 2

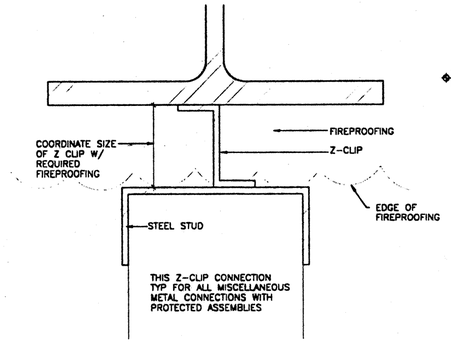

4 SECTION DETAIL STUD TO STEEL CONNECTION
SCALE 1 : 1

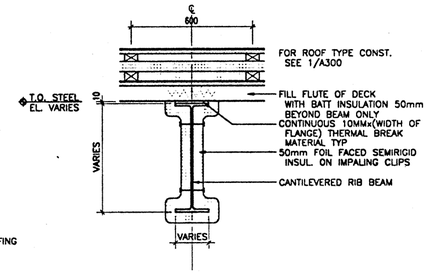

3 SECTION DETAIL AT CANTILEVERED BEAM
SCALE 1 : 10

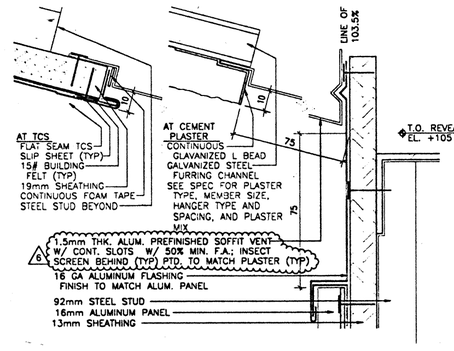

2 SECTION DETAIL AT ALUMINUM
SCALE 1 : 1

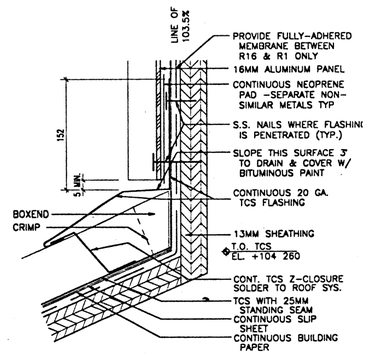

1 SECTION DETAIL AT ALUMINUM & TCS
SCALE 1 : 1

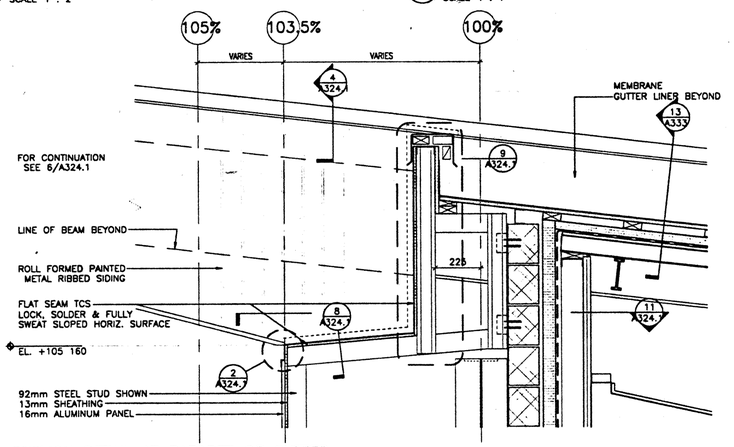

8 SECTION DETAIL AT PARAPET OF GUTTER
SCALE 1 : 10 AT COLUMN

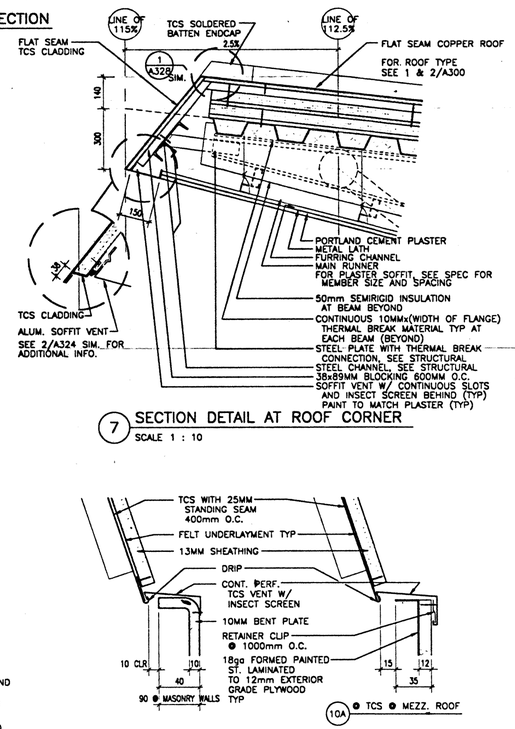

7 SECTION DETAIL AT ROOF CORNER
SCALE 1 : 10

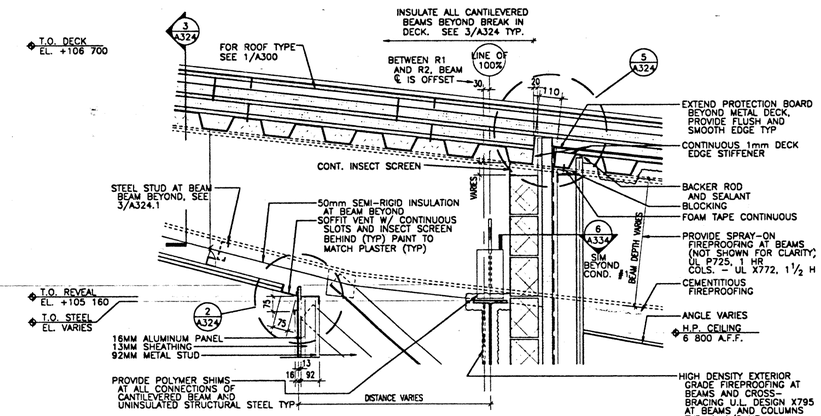

6 SECTION DETAIL AT SOFFIT
SCALE 1 : 10

10 DETAIL FLASHING AT B.O. TCS
SCALE 1 : 2

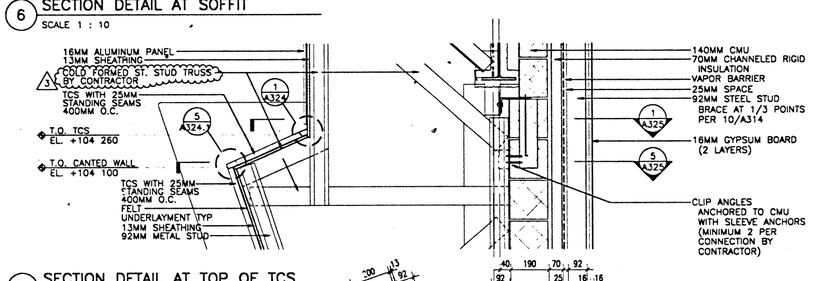

9 SECTION DETAIL AT TOP OF TCS
SCALE 1 : 10

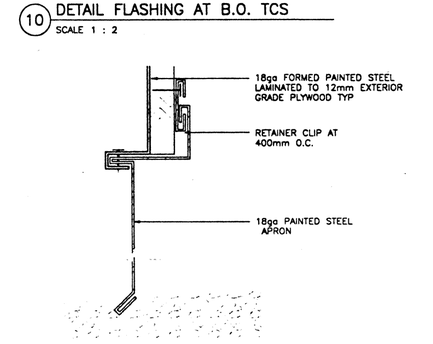

11 SECTION DETAIL AT TOP OF TCS
SCALE 1 : 10 AT COLUMN

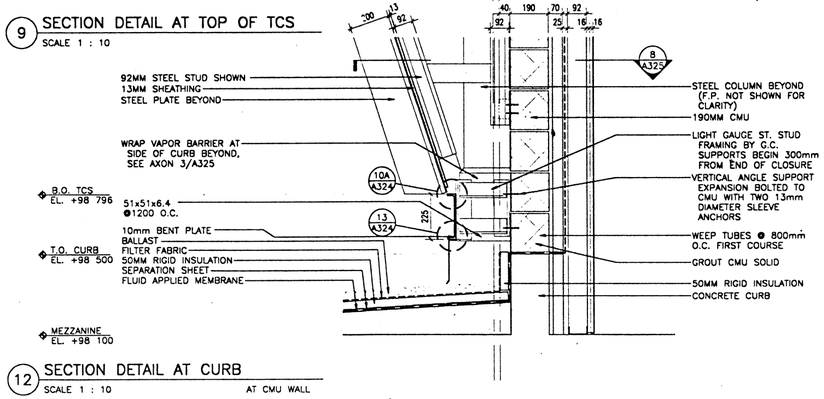

12 SECTION DETAIL AT CURB
SCALE 1 : 10 AT CMU WALL

13 DETAIL FLASHING AT B.O. TCS
SCALE 1 : 1

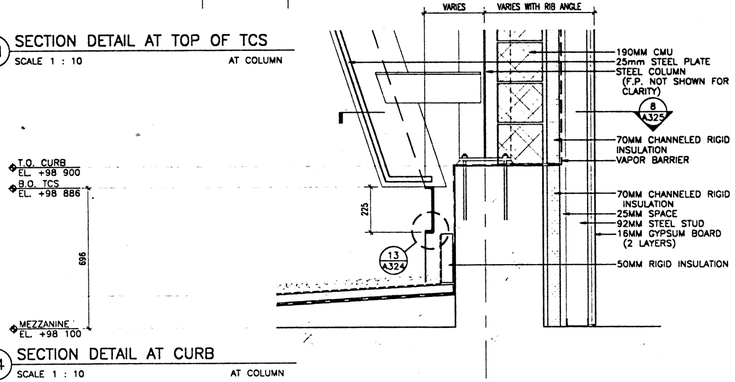

14 SECTION DETAIL AT CURB
SCALE 1 : 10 AT COLUMN

241A324 10-2-96 6:14:30 pm EST

NMAI
CULTURAL RESOURCES CENTER

Architect
Polshek Metcalf Tobey and Partners Joint Venture

James Stewart Polshek and Partners
320 West 13 Street
New York, NY 10014

Metcalf Tobey and Partners
1750 Presidents Street
Reston, Virginia 22090

In Association With
Native American Design Collaborative

Louis L. Weller, President
401 Alvarado Drive S.E. - Suite D
Albuquerque, New Mexico 87108

Structural Engineer
Cagley and Associates
6141 Executive Boulevard
Rockville, Maryland 20852

MEP Engineer
Syska and Hennessy, Inc.
11 West 42 Street
New York, New York 10036

(other consultants)

Key Plan

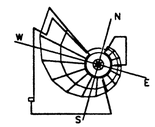

SMITHSONIAN INSTITUTION

Office of Design and Construction
955 L'Enfant Plaza, SW, Suite 3230
Washington, DC 20024

Project No.
ODC No. 912205B

Project Title
CULTURAL RESOURCES CENTER
SUITLAND, MARYLAND

Facility
NATIONAL MUSEUM OF THE AMERICAN INDIAN

Sheet Title
SECTION DETAILS AT MEZZANINE

Revisions	Date
01 - AMENDMENT 1 THROUGH 8	9.30.96

FINAL

Date Issued:	3.31.95	Sheet No.	A324
Scale:	AS SHOWN		
Drawn by:			
Checked by:	WK	129 OF 420	

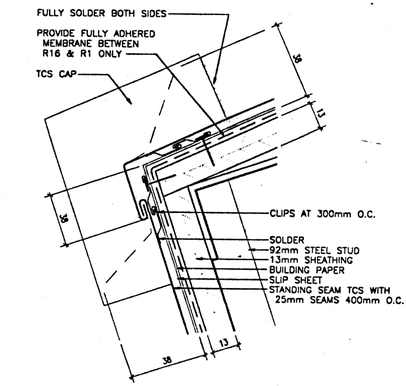

5 SECTION DETAIL TCS "SHELF" EDGE
SCALE 1 : 1

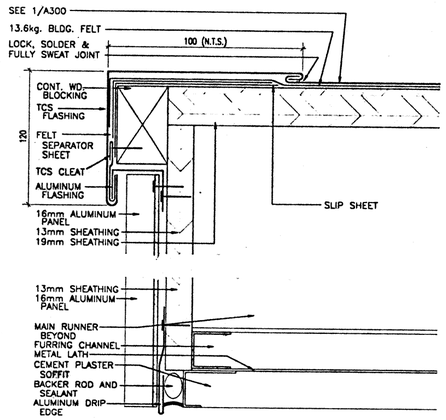

4 SECTION DETAIL ALUMINUM
SCALE 1 : 1 AT BRACKET REVEAL

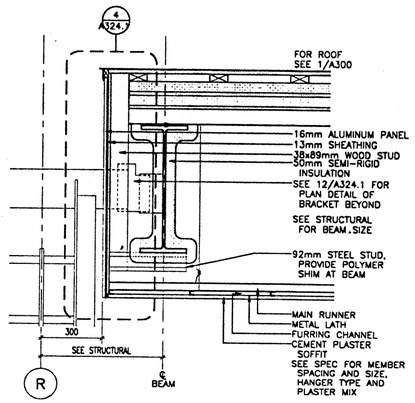

3 SECTION DETAIL BRACKET REVEAL
SCALE 1 : 10

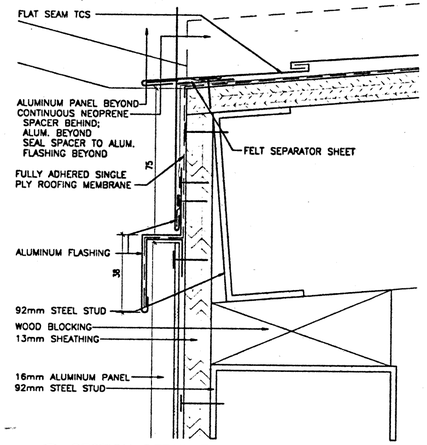

2 SECTION DETAIL T.O. ALUMINUM AT FLAT SEAM
SCALE 1 : 1

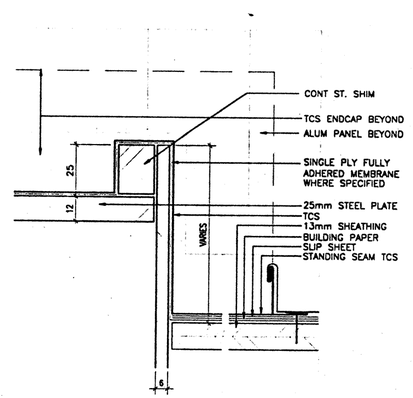

1 SECTION DETAIL TCS AT BRACKET "SPINE"
SCALE 1 : 1

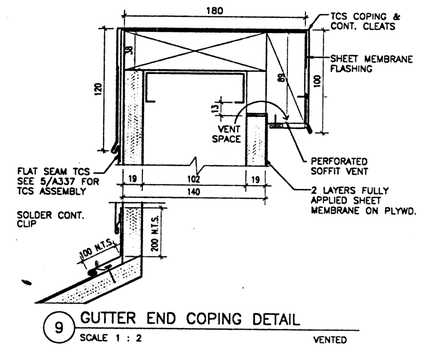

9 GUTTER END COPING DETAIL
SCALE 1 : 2 VENTED

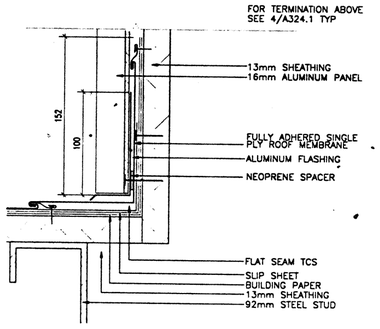

8 SECTION DETAIL B.O. ALUMINUM AT TCS
SCALE 1 : 1

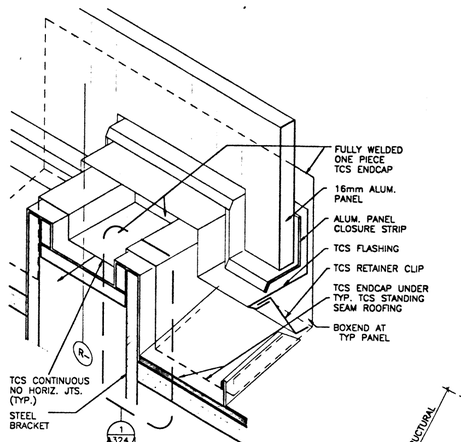

7 ALUM/TCS FLASHING @ RIB
SCALE 1 : 2 ISOMETRIC

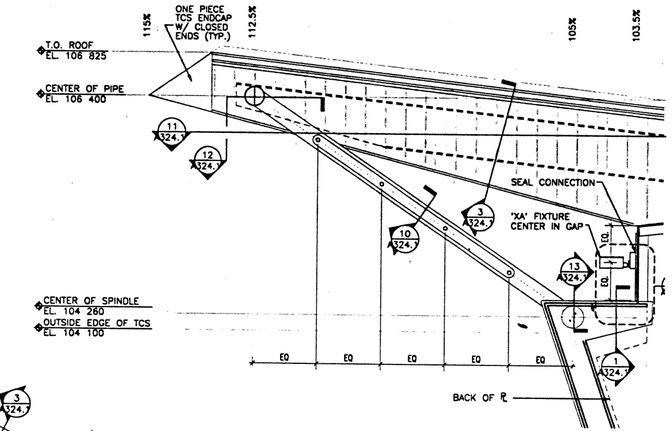

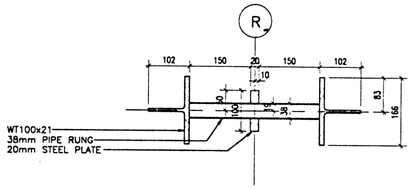

10 CROSS SECTION AT BRACKET
SCALE 1 : 5

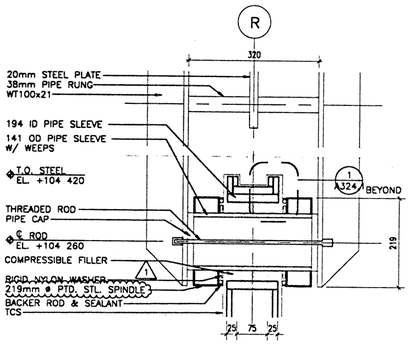

13 SECTION DETAIL AT B.O. BRACKET
SCALE 1 : 5

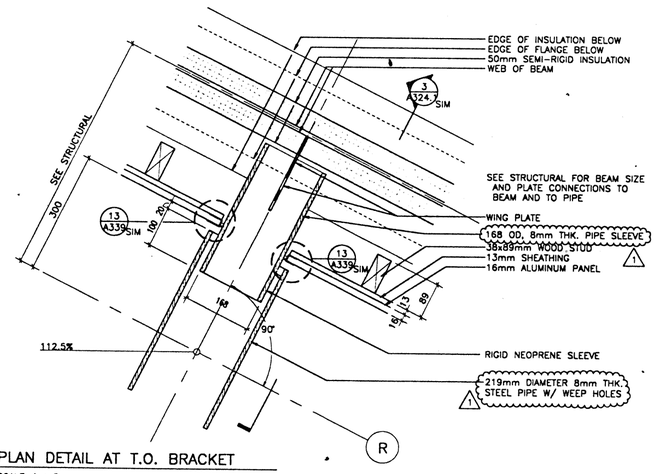

12 PLAN DETAIL AT T.O. BRACKET
SCALE 1 : 5

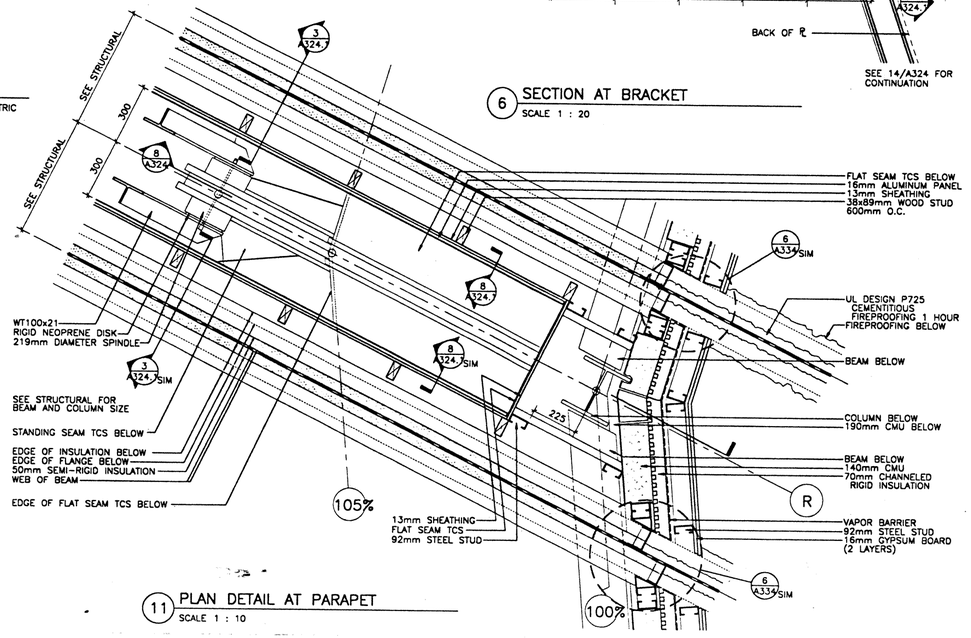

11 PLAN DETAIL AT PARAPET
SCALE 1 : 10

6 SECTION AT BRACKET
SCALE 1 : 20

241A3241 10-2-96 6:6:09 pm EST

NMAI
CULTURAL RESOURCES CENTER

Architect
Polshek Metcalf Tobey and Partners Joint Venture

James Stewart Polshek and Partners
320 West 13 Street
New York, NY 10014

Metcalf Tobey and Partners
1750 Presidents Street
Reston, Virginia 22090

In Association With
Native American Design Collaborative

Louis L. Weller, President
401 Alvarado Drive S.E. – Suite D
Albuquerque, New Mexico 87108

Structural Engineer
Cagley and Associates
6141 Executive Boulevard
Rockville, Maryland 20852

MEP Engineer
Syska and Hennessy, Inc.
11 West 42 Street
New York, New York 10036

(other consultants)

Key Plan

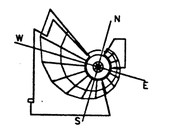

SMITHSONIAN INSTITUTION

Office of Design and Construction
955 L'Enfant Plaza, SW, Suite 3230
Washington, DC 20024

Project No.
ODC No. 912205B

Project Title
CULTURAL RESOURCES CENTER
SUITLAND, MARYLAND

Facility
NATIONAL MUSEUM OF THE AMERICAN INDIAN

Sheet Title
DETAILS
MEZZANINE

01 – AMENDMENT 1 THROUGH 8 9.30.96
Revisions Date

FINAL

Date Issued:	3.31.95	Sheet No.	A324.1
Scale:	AS SHOWN		
Drawn by:			
Checked by:	WK	130 OF 420	

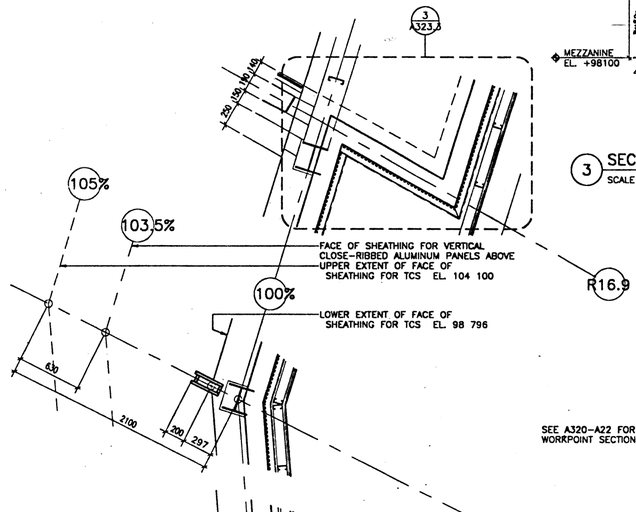

9 PLAN DETAILS MEZZANINE OUTER WALL AT CURB
SCALE 1 : 20 RIBS #1-6

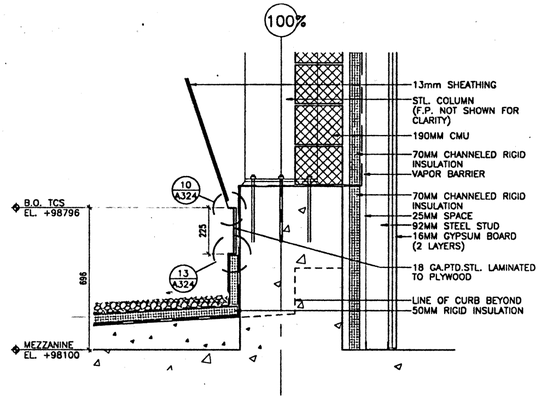

3 SECTION DETAIL AT CURB
SCALE 1 : 10

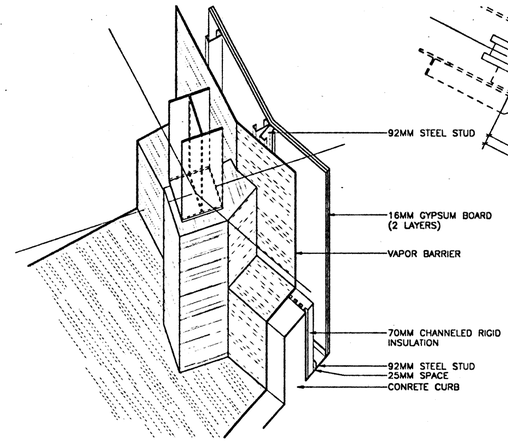

2 AXON DETAIL AT CURB
SCALE N.T.S. AT RIB #1

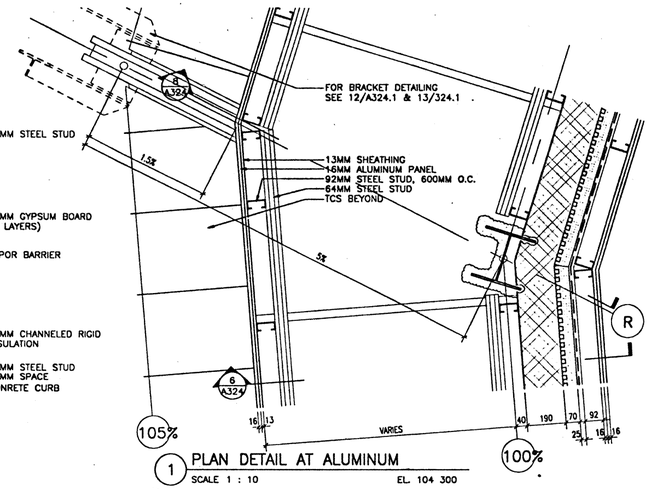

1 PLAN DETAIL AT ALUMINUM
SCALE 1 : 10 EL. 104 300

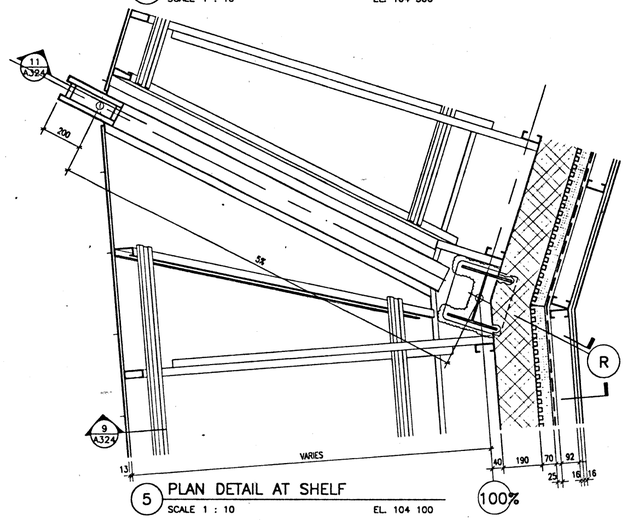

5 PLAN DETAIL AT SHELF
SCALE 1 : 10 EL. 104 100

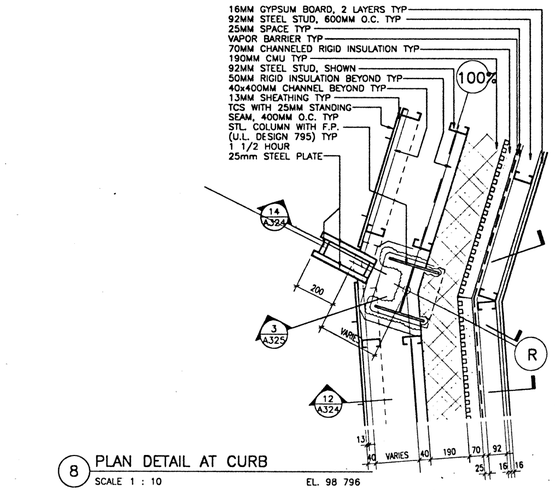

8 PLAN DETAIL AT CURB
SCALE 1 : 10 EL. 98 796

241A325 4-3-95 10:11:13 am EST

NMAI
CULTURAL RESOURCES CENTER

Architect
Polshek Metcalf Tobey and Partners Joint Venture

James Stewart Polshek and Partners
320 West 13 Street
New York, NY 10014

Metcalf Tobey and Partners
1750 Presidents Street
Reston, Virginia 22090

In Association With
Native American Design Collaborative

Louis L. Weller, President
401 Alvarado Drive S.E. - Suite D
Albuquerque, New Mexico 87108

Structural Engineer
Cagley and Associates
6141 Executive Boulevard
Rockville, Maryland 20852

MEP Engineer
Syska and Hennessy, Inc.
11 West 42 Street
New York, New York 10036

(other consultants)

Key Plan

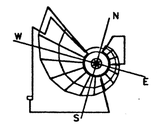

SMITHSONIAN INSTITUTION

Office of Design and Construction
955 L'Enfant Plaza, SW, Suite 3230
Washington, DC 20024

Project No.
ODC No. 912205B

Project Title
CULTURAL RESOURCES CENTER
SUITLAND, MARYLAND

Facility
NATIONAL MUSEUM OF THE AMERICAN INDIAN

Sheet Title
PLAN DETAILS
MEZZANINE LEVEL

Revisions Date

FINAL

Date Issued:	3.31.95	Sheet No.	A325
Scale:	1 : 100		
Drawn by:			
Checked by:	WK	131 OF 420	

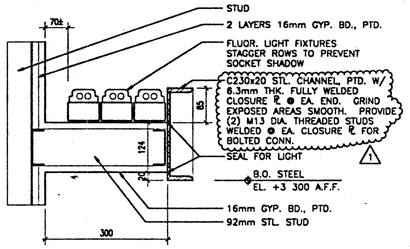

3 SECTION THRU LIGHT COVE
SCALE 1 : 5

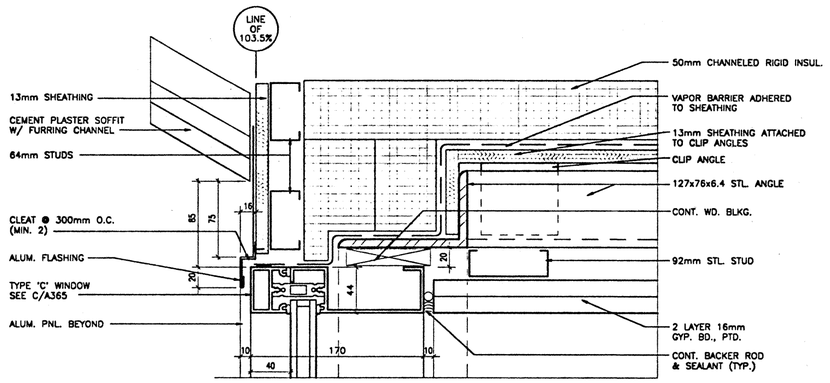

2 HEAD ● WINDOW TYPE 'C'
SCALE 1 : 2

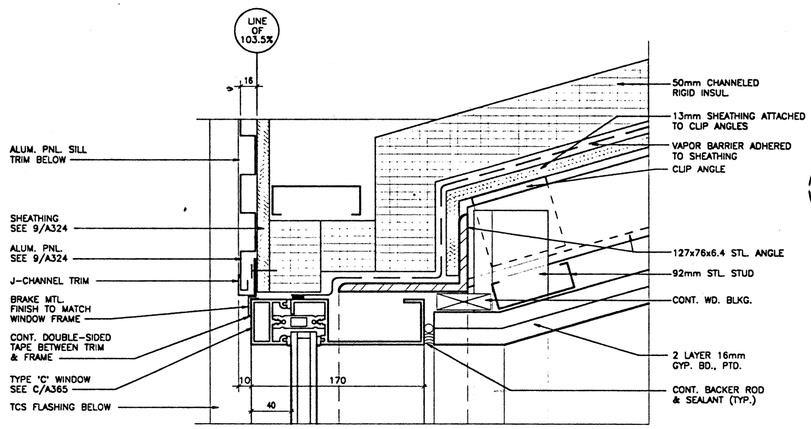

5 JAMB ● WINDOW TYPE 'C'
SCALE 1 : 2

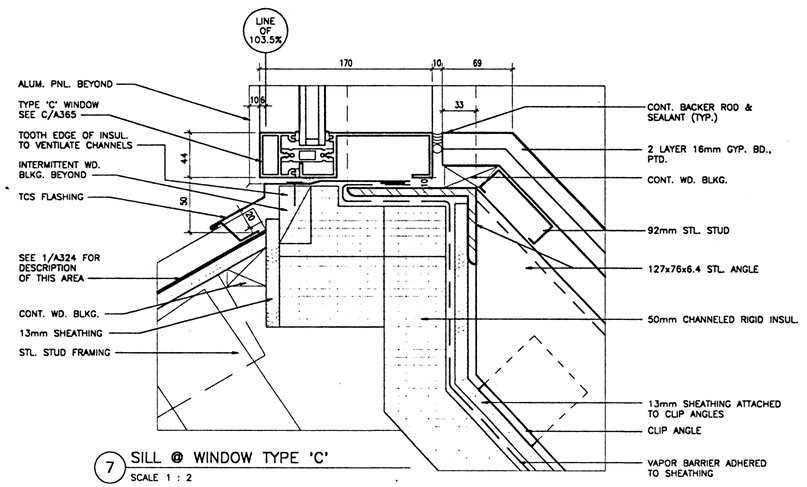

7 SILL ● WINDOW TYPE 'C'
SCALE 1 : 2

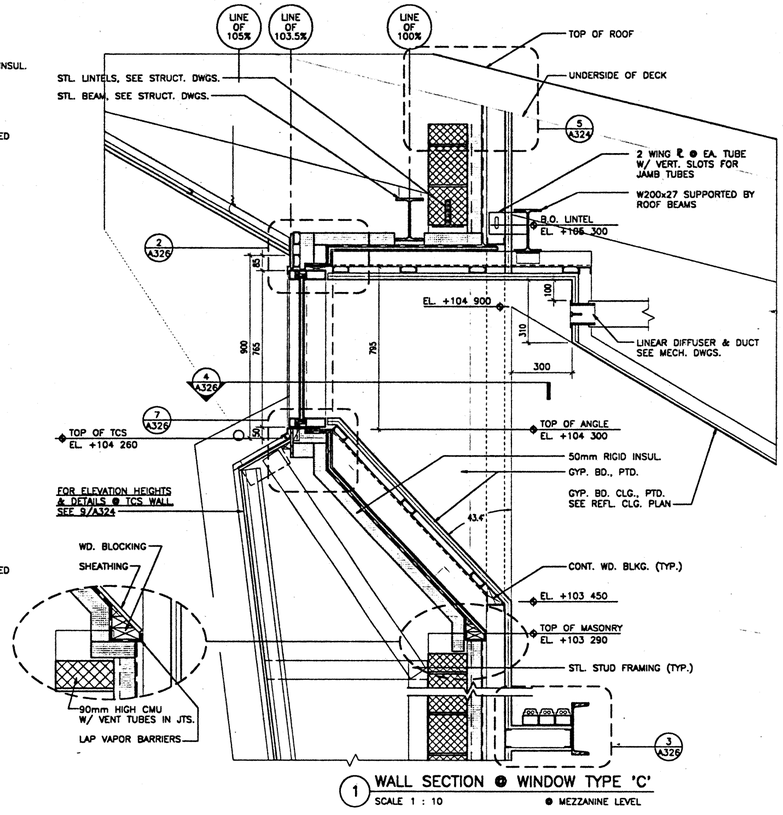

1 WALL SECTION ● WINDOW TYPE 'C'
SCALE 1 : 10 ● MEZZANINE LEVEL

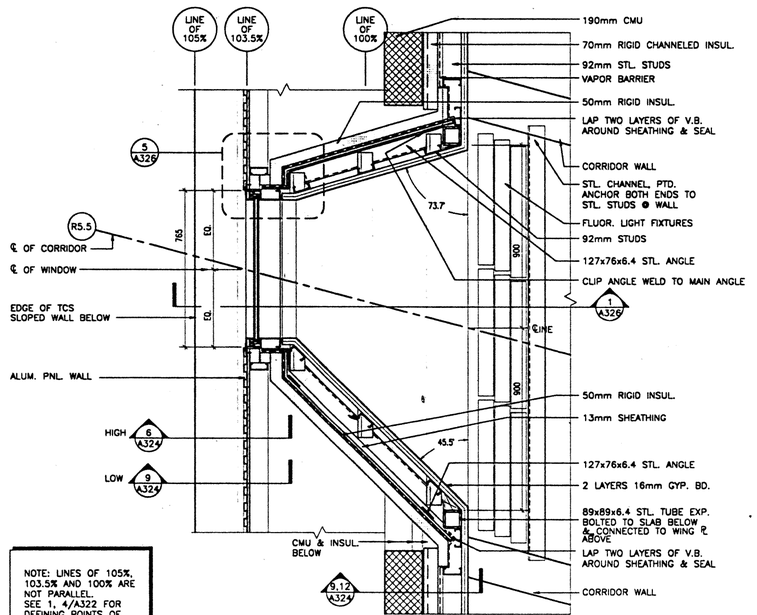

NOTE: LINES OF 105%, 103.5% AND 100% ARE NOT PARALLEL. SEE 1, 4/A322 FOR DEFINING POINTS OF THESE LINES

4 PLAN DETAIL ● WINDOW TYPE 'C'
SCALE 1 : 10 ● MEZZANINE LEVEL

241A326 10-2-96 61/25 pm EST

NMAI
CULTURAL RESOURCES CENTER

Architect
Polshek Metcalf Tobey and Partners Joint Venture
James Stewart Polshek and Partners
320 West 13 Street
New York, NY 10014
Metcalf Tobey and Partners
1750 Presidents Street
Reston, Virginia 22090

In Association With
Native American Design Collaborative
Louis L. Weller, President
401 Alvarado Drive S.E. – Suite D
Albuquerque, New Mexico 87108

Structural Engineer
Cagley and Associates
6141 Executive Boulevard
Rockville, Maryland 20852

MEP Engineer
Syska and Hennessy, Inc.
11 West 42 Street
New York, New York 10036

(other consultants)

Key Plan

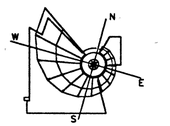

SMITHSONIAN INSTITUTION

Office of Design and Construction
955 L'Enfant Plaza, SW, Suite 3230
Washington, DC 20024

Project No.
ODC No. 912205B

Project Title
CULTURAL RESOURCES CENTER
SUITLAND, MARYLAND

Facility
NATIONAL MUSEUM OF THE AMERICAN INDIAN

Sheet Title
WINDOW ● MEZZANINE SECTIONS & DETAILS

Revisions	Date
01 – AMENDMENT 1 THROUGH 8	9.30.96

FINAL

Date Issued: 3.31.95	Sheet No. A326
Scale: AS NOTED	
Drawn by: DJL	
Checked by: WK	132 OF 420

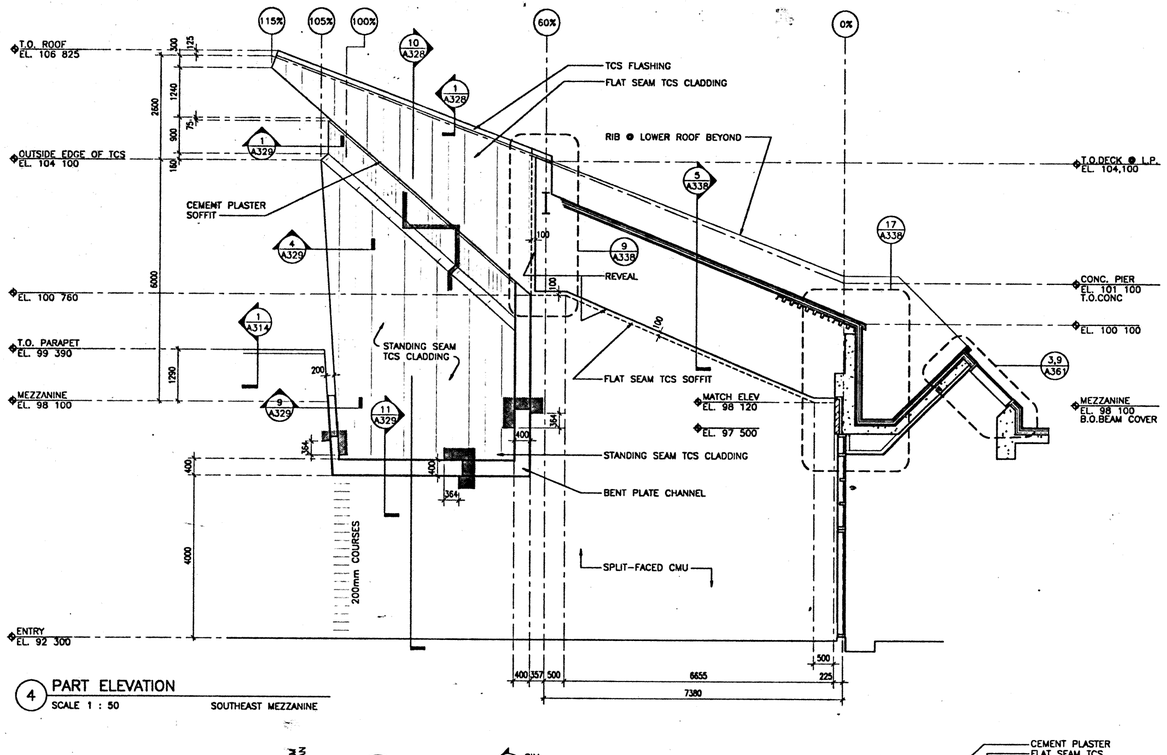

4 PART ELEVATION
SCALE 1 : 50 SOUTHEAST MEZZANINE

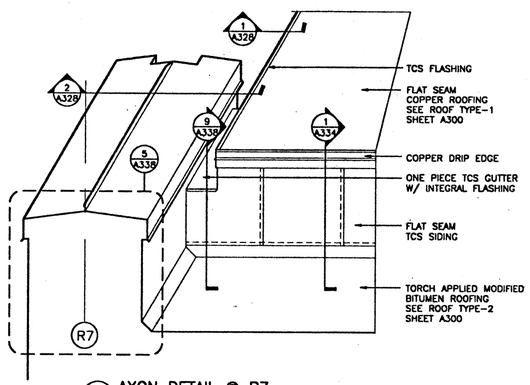

3 AXON DETAIL @ R7
SCALE 1 : 10 AT 60% TRANSITION

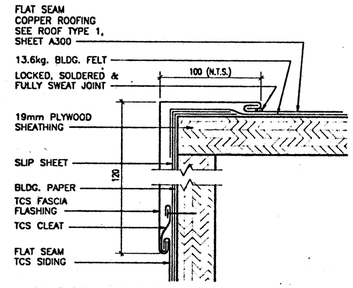

1 DETAIL @ ROOF EDGE
SCALE 1 : 1

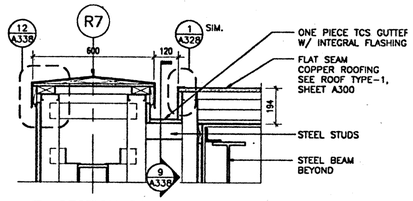

2 SECTION DETAIL
SCALE 1 : 10

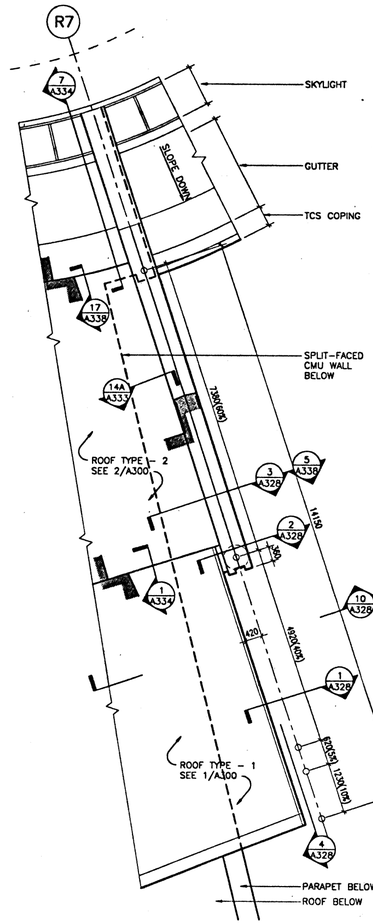

6 ROOF PLAN @ RIB 7
SCALE 1 : 50

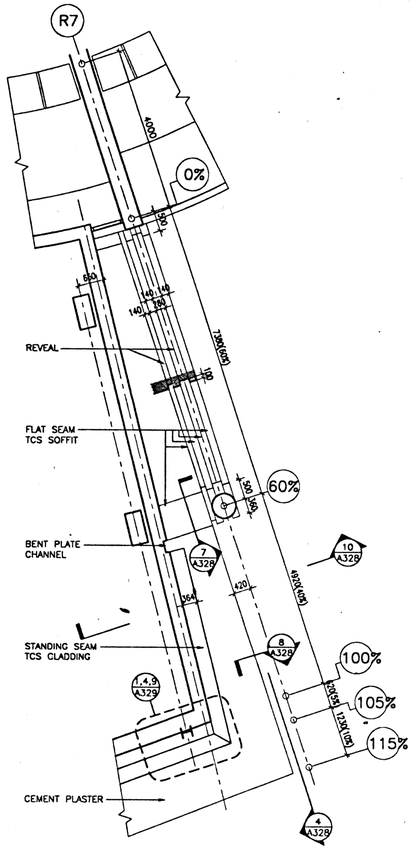

5 REFLECTED CEILING PLAN @ RIB 7
SCALE 1 : 50

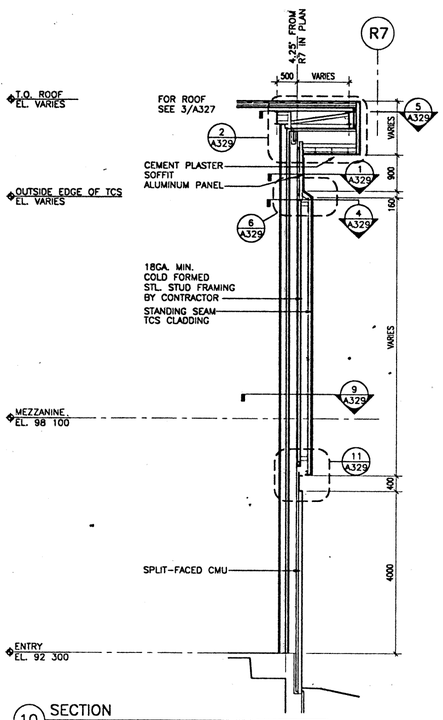

10 SECTION
SCALE 1 : 50

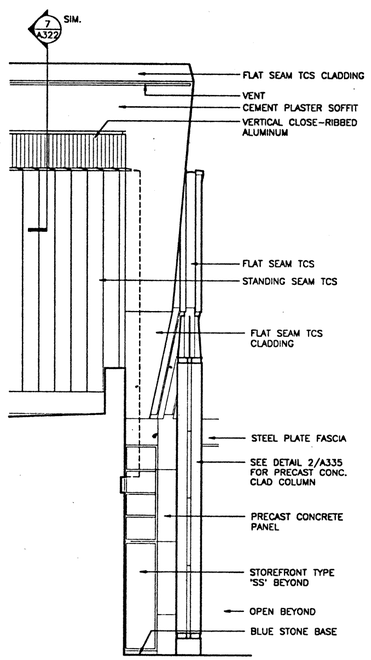

9 ELEVATION
SCALE 1 : 50

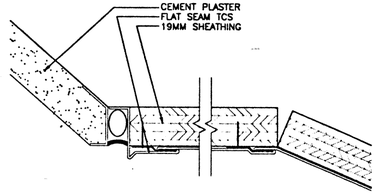

7 SOFFIT DETAIL
SCALE 1 : 1

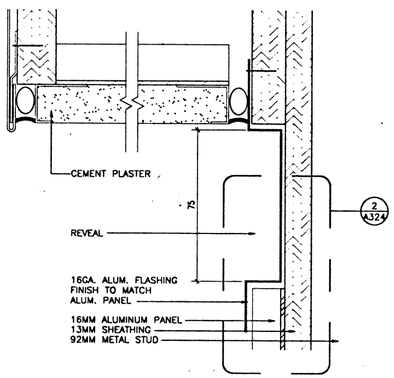

8 SOFFIT DETAIL
SCALE 1 : 1

241A328 4-3-95 10:14:55 am EST

NMAI
CULTURAL RESOURCES CENTER

Architect
Polshek Metcalf Tobey and Partners Joint Venture

James Stewart Polshek and Partners
320 West 13 Street
New York, NY 10014

Metcalf Tobey and Partners
1750 Presidents Street
Reston, Virginia 22090

In Association With
Native American Design Collaborative

Louis L. Weller, President
401 Alvarado Drive S.E. – Suite D
Albuquerque, New Mexico 87108

Structural Engineer
Cagley and Associates
6141 Executive Boulevard
Rockville, Maryland 20852

MEP Engineer
Syska and Hennessy, Inc.
11 West 42 Street
New York, New York 10036

(other consultants)

Key Plan

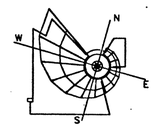

SMITHSONIAN INSTITUTION

Office of Design and Construction
955 L'Enfant Plaza, SW, Suite 3230
Washington, DC 20024

Project No.
ODC No. 9122058

Project Title
CULTURAL RESOURCES CENTER
SUITLAND, MARYLAND

Facility
NATIONAL MUSEUM OF THE AMERICAN INDIAN

Sheet Title
PLANS, ELEVATIONS, DETAILS ALONG RIB 7

Revisions Date

FINAL

Date Issued: 3.31.95	Sheet No. A328
Scale: AS SHOWN	
Drawn by:	
Checked by: WK	133 OF 420

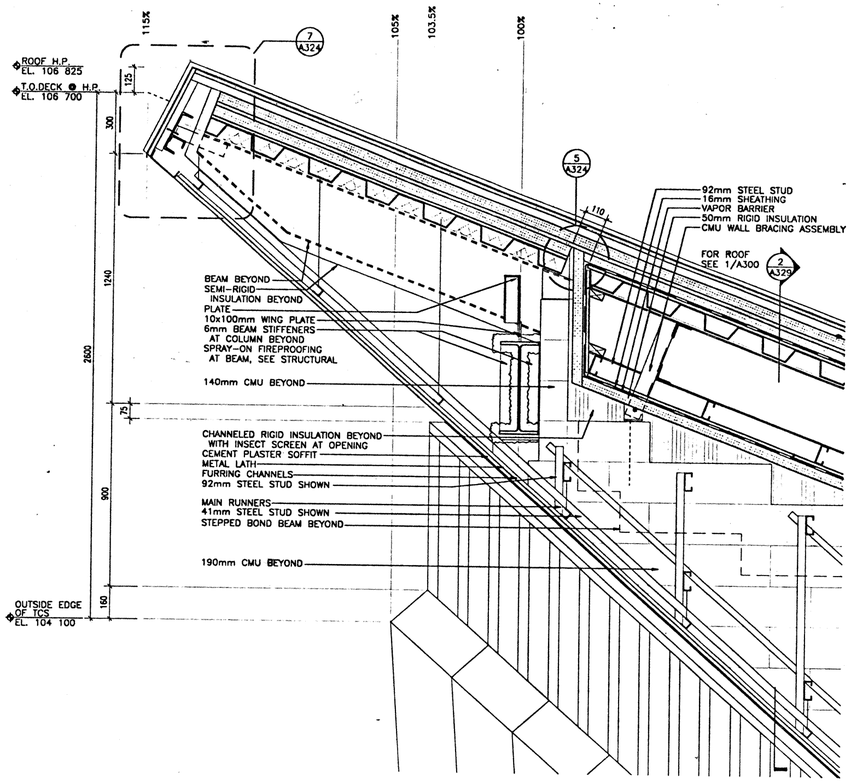

3 SECTION DETAIL DECK SEPARATION
SCALE 1 : 10 NEAR R7

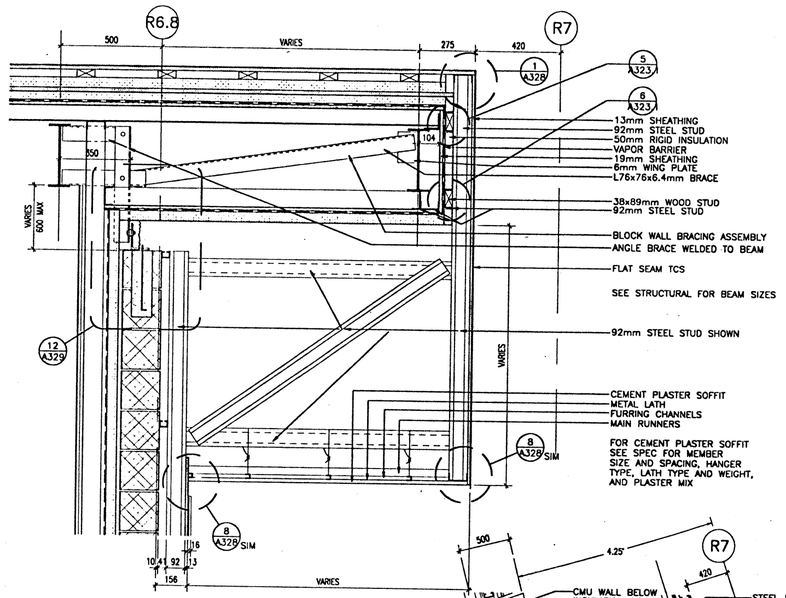

2 SECTION DETAIL
SCALE 1 : 10

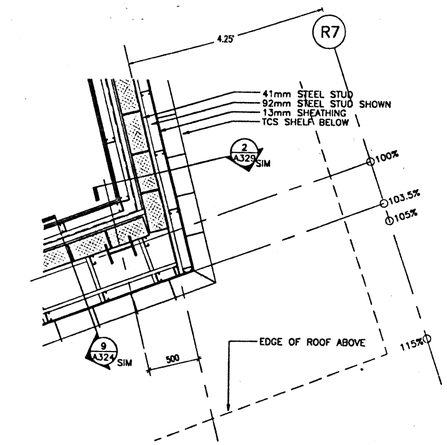

1 PLAN DETAIL SE CORNER MEZZANINE
SCALE 1 : 20 AT ALUMINUM BAND EL. VARIES

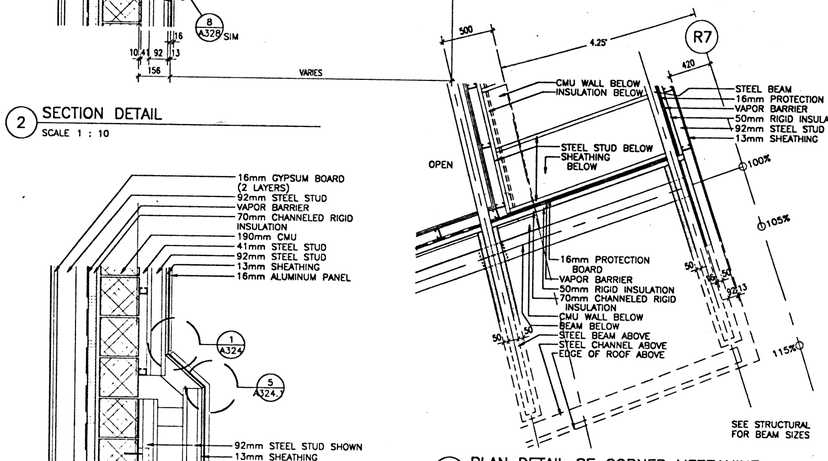

6 SECTION DETAIL
SCALE 1 : 10

5 PLAN DETAIL SE CORNER MEZZANINE
SCALE 1 : 20 AT ROOF

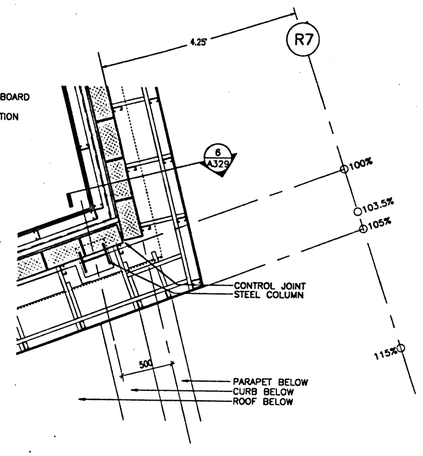

4 PLAN DETAIL SE CORNER MEZZANINE
SCALE 1 : 20 JUST BELOW TCS "SHELF" EL. VARIES

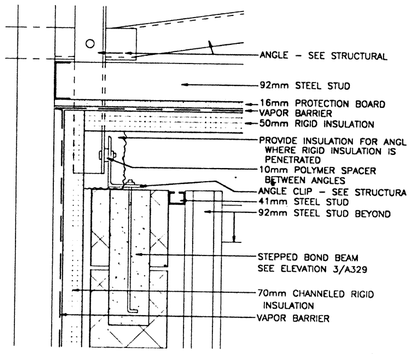

12 BRACING OF CMU WALL
SCALE 1 : 5

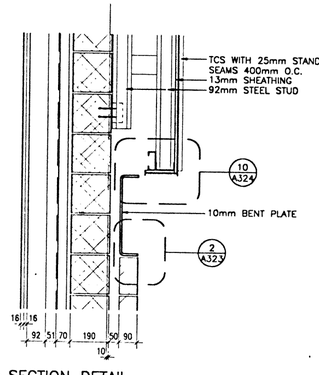

11 SECTION DETAIL
SCALE 1 : 10

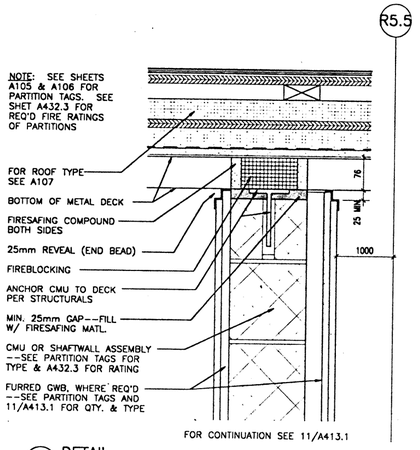

10 DETAIL
SCALE 1 : 5 RATED WALLS @ METAL ROOF DECK

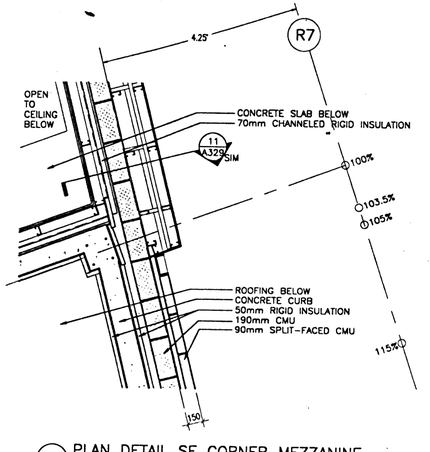

9 PLAN DETAIL SE CORNER MEZZANINE
SCALE 1 : 20 AT MEZZANINE CURB EL. +98 700

241A329 4-3-95 10:16:25 on EST

NMAI
CULTURAL RESOURCES CENTER

Architect
Polshek Metcalf Tobey and Partners Joint Venture
James Stewart Polshek and Partners
320 West 13 Street
New York, NY 10014
Metcalf Tobey and Partners
1750 Presidents Street
Reston, Virginia 22090
In Association With
Native American Design Collaborative
Louis L. Weller, President
401 Alvarado Drive S.E. - Suite D
Albuquerque, New Mexico 87108
Structural Engineer
Cagley and Associates
6141 Executive Boulevard
Rockville, Maryland 20852
MEP Engineer
Syska and Hennessy, Inc.
11 West 42 Street
New York, New York 10036
(other consultants)

Key Plan

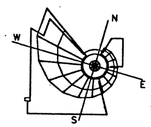

SMITHSONIAN INSTITUTION

Office of Design and Construction
955 L'Enfant Plaza, SW, Suite 3230
Washington, DC 20024

Project No.
ODC No. 912205B

Project Title
CULTURAL RESOURCES CENTER
SUITLAND, MARYLAND

Facility
NATIONAL MUSEUM OF THE AMERICAN INDIAN

Sheet Title
DETAILS
SOUTHEAST MEZZANINE

Revisions Date

FINAL

Date Issued:	3.31.95	Sheet No.
Scale:	AS NOTED	A329
Drawn by:		
Checked by:	WK	134 OF 420

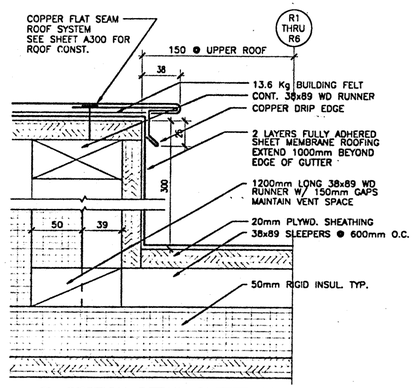

5 SECTION DETAIL GUTTER EDGE
SCALE 1 : 2

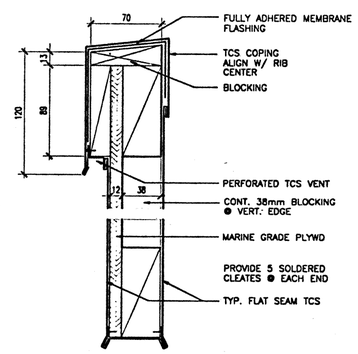

4 REMOVABLE TCS PANEL
SCALE 1 : 2 ● RIBS – LOWER ROOF

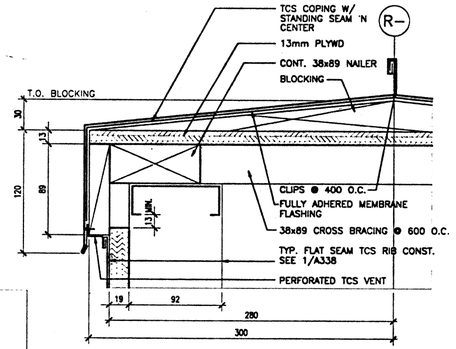

8 TYP. TCS VENTED COPING DETAIL
SCALE 1 : 2

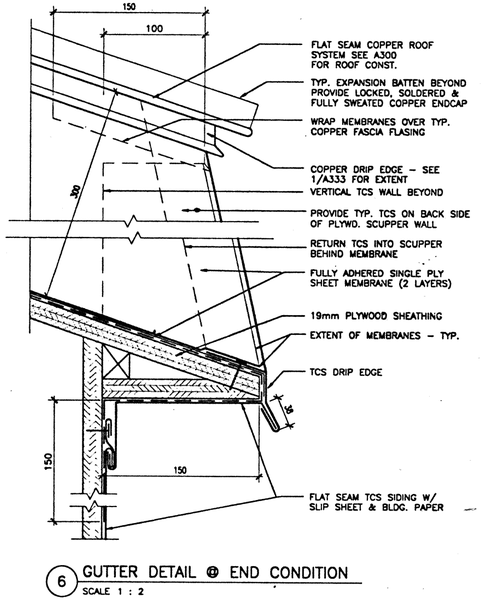

6 GUTTER DETAIL @ END CONDITION
SCALE 1 : 2

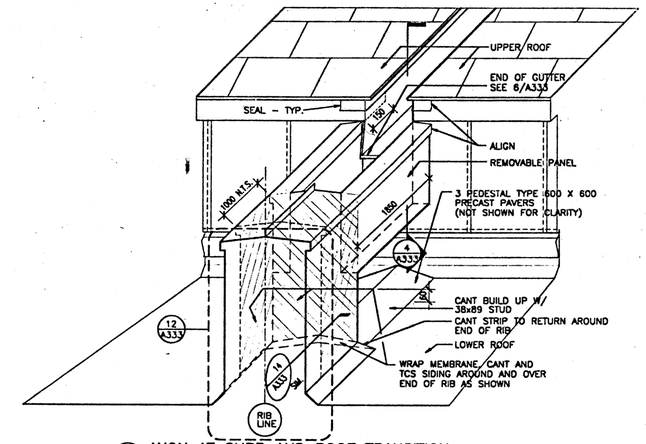

1 AXON AT CURB AND ROOF TRANSITION
SCALE N.T.S.

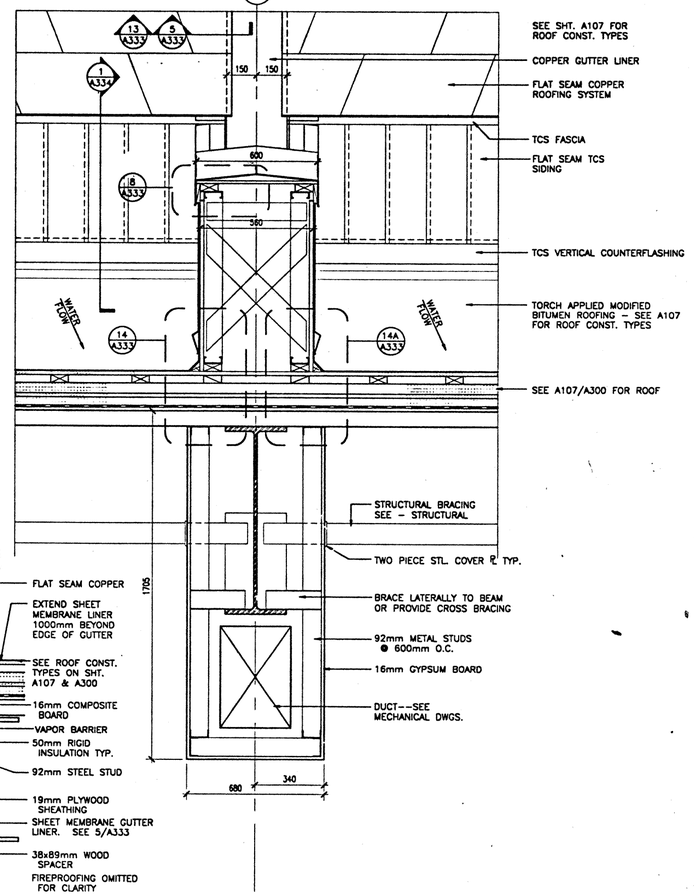

12 SECTION THROUGH RIB
SCALE 1 : 10 RADIAL BEAMS AT LOW ROOF

14 14A DETAIL: BASE OF RIB
SCALE 1 : 2 LOWER ROOF

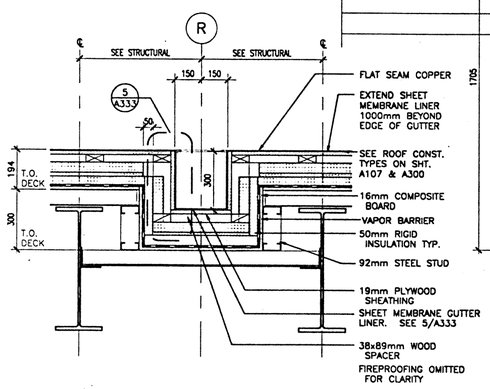

13 GUTTER AT UPPER ROOF
SCALE 1 : 10

NMAI
CULTURAL RESOURCES CENTER

Architect
Polshek Metcalf Tobey and Partners Joint Venture
James Stewart Polshek and Partners
320 West 13 Street
New York, NY 10014
Metcalf Tobey and Partners
1750 Presidents Street
Reston, Virginia 22090
In Association With
Native American Design Collaborative
Louis L. Weller, President
401 Alvarado Drive S.E. – Suite D
Albuquerque, New Mexico 87108
Structural Engineer
Cagley and Associates
6141 Executive Boulevard
Rockville, Maryland 20852
MEP Engineer
Syska and Hennessy, Inc.
11 West 42 Street
New York, New York 10036
(other consultants)

Key Plan

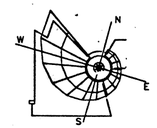

SMITHSONIAN INSTITUTION
Office of Design and Construction
955 L'Enfant Plaza, SW, Suite 3230
Washington, DC 20024

Project No.
ODC No. 912205B

Project Title
CULTURAL RESOURCES CENTER
SUITLAND, MARYLAND

Facility
NATIONAL MUSEUM OF THE AMERICAN INDIAN

Sheet Title
PIER/CURB/GUTTER ● RIBS SECTIONS AND DETAILS

Revisions Date

FINAL

Date Issued:	3.31.95	Sheet No.	●
Scale:	AS NOTED		A333
Drawn by:			
Checked by:	WK	135 OF 420	

241A333 6-26-95 10:11:41 am EST

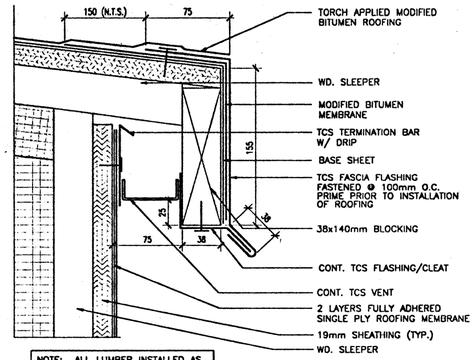

3 DRIP EDGE DETAIL @ LOWER ROOF
SCALE 1 : 2

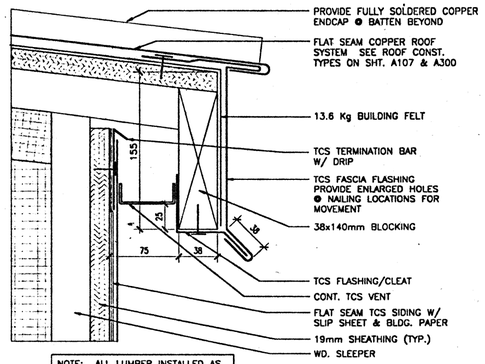

2 FASCIA/VENT DETAIL @ UPPER ROOF
SCALE 1 : 2

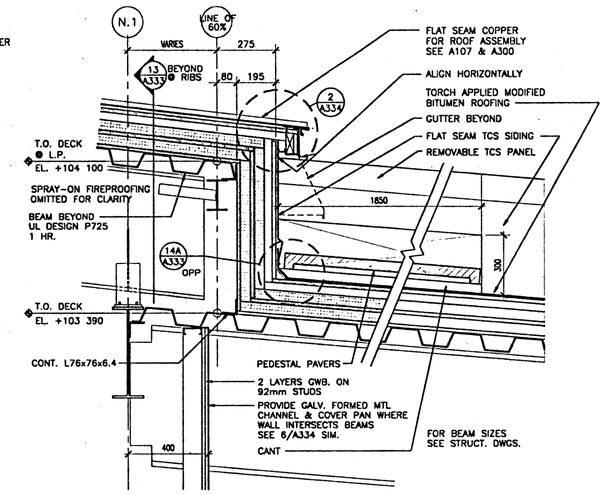

1 BREAK AT UPPER AND LOWER ROOF
SCALE 1 : 10 AT MIDPOINT R1 & R2

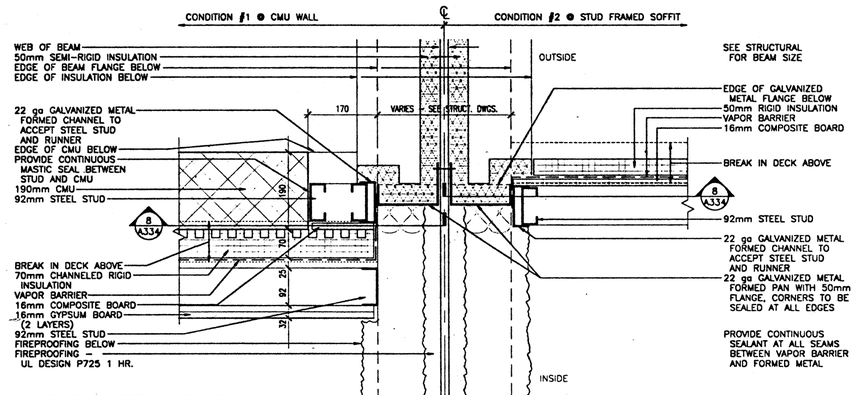

6 PLAN DETAIL AT WEB
SCALE 1 : 5

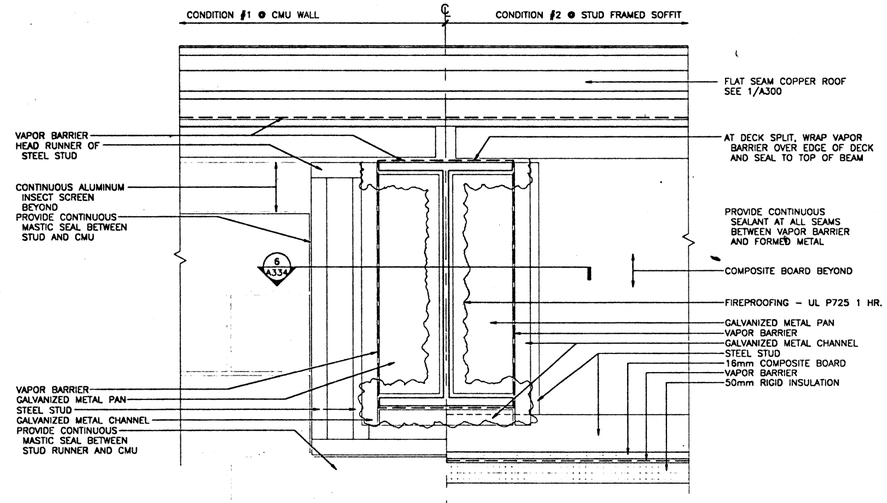

8 SECTION VAPOR BARRIER AT BEAM
SCALE 1 : 5 STUD FRAMING ELEVATION

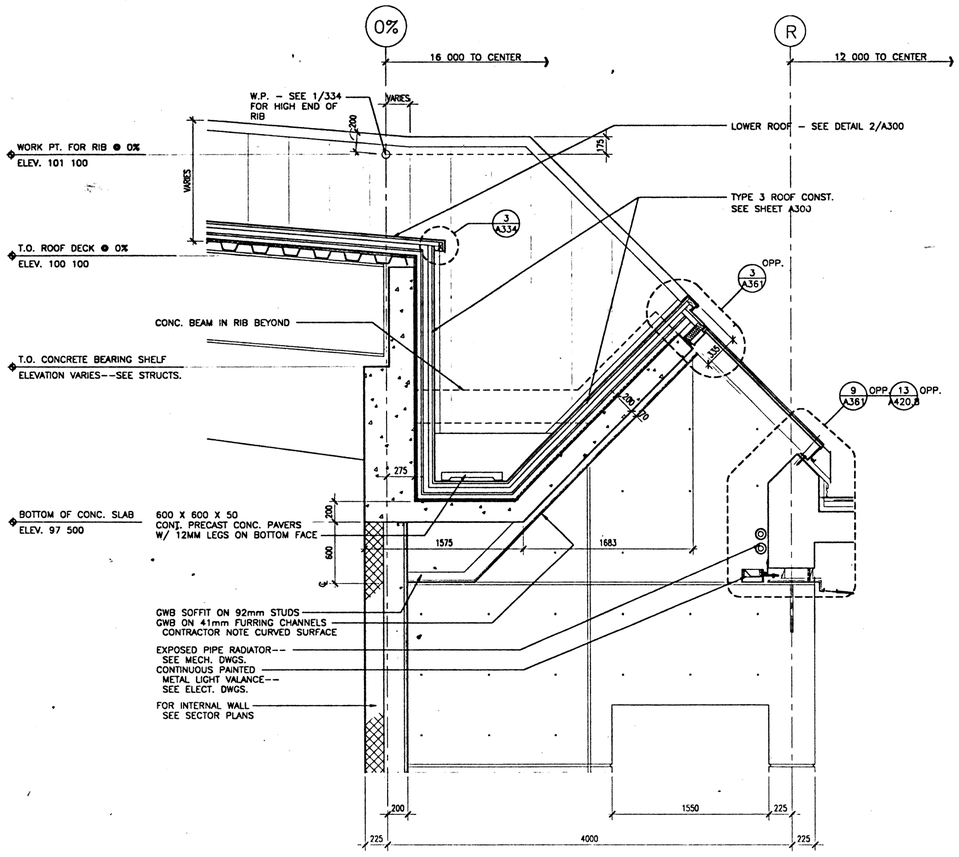

7 SECTION THROUGH GUTTER/SKYLIGHT
SCALE 1 : 20 AT RIB R2; OTHERS SIMILAR

241A334 4-3-95 10:15:50 am EST

NMAI
CULTURAL RESOURCES CENTER

Architect
Polshek Metcalf Tobey and Partners Joint Venture
James Stewart Polshek and Partners
320 West 13 Street
New York, NY 10014
Metcalf Tobey and Partners
1750 Presidents Street
Reston, Virginia 22090

In Association With
Native American Design Collaborative
Louis L. Weller, President
401 Alvarado Drive S.E. - Suite D
Albuquerque, New Mexico 87108

Structural Engineer
Cagley and Associates
6141 Executive Boulevard
Rockville, Maryland 20852

MEP Engineer
Syska and Hennessy, Inc.
11 West 42 Street
New York, New York 10036

(other consultants)

Key Plan

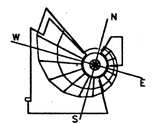

SMITHSONIAN INSTITUTION

Office of Design and Construction
955 L'Enfant Plaza, SW, Suite 3230
Washington, DC 20024

Project No.
ODC No. 912205B

Project Title
CULTURAL RESOURCES CENTER
SUITLAND, MARYLAND

Facility
NATIONAL MUSEUM OF THE AMERICAN INDIAN

Sheet Title
ROOF SECTIONS AND DETAILS LOWER ROOF

Revisions Date

FINAL

Date Issued: 3.31.95	Sheet No. A334
Scale: AS NOTED	
Drawn by:	
Checked by: WK	136 OF 420

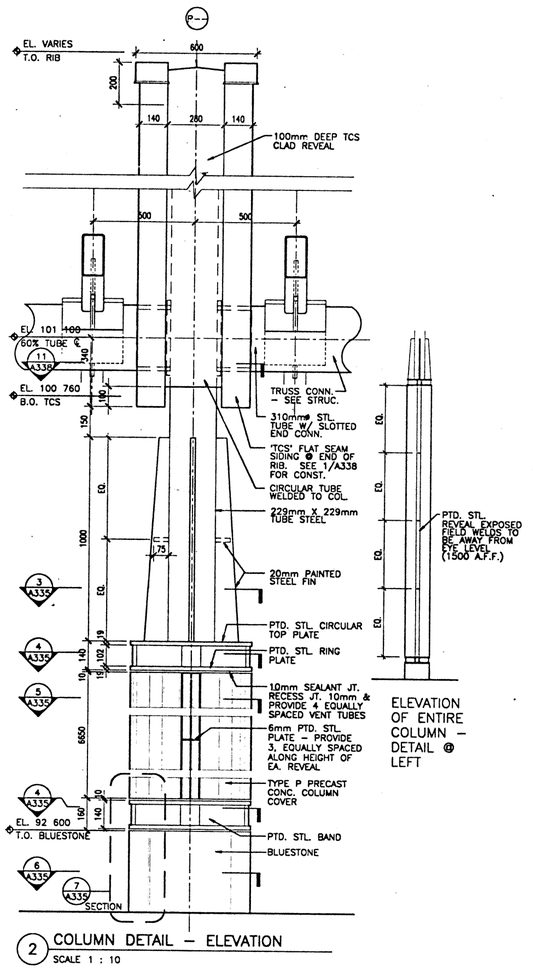

ELEVATION OF ENTIRE COLUMN – DETAIL @ LEFT

2 COLUMN DETAIL – ELEVATION
SCALE 1 : 10

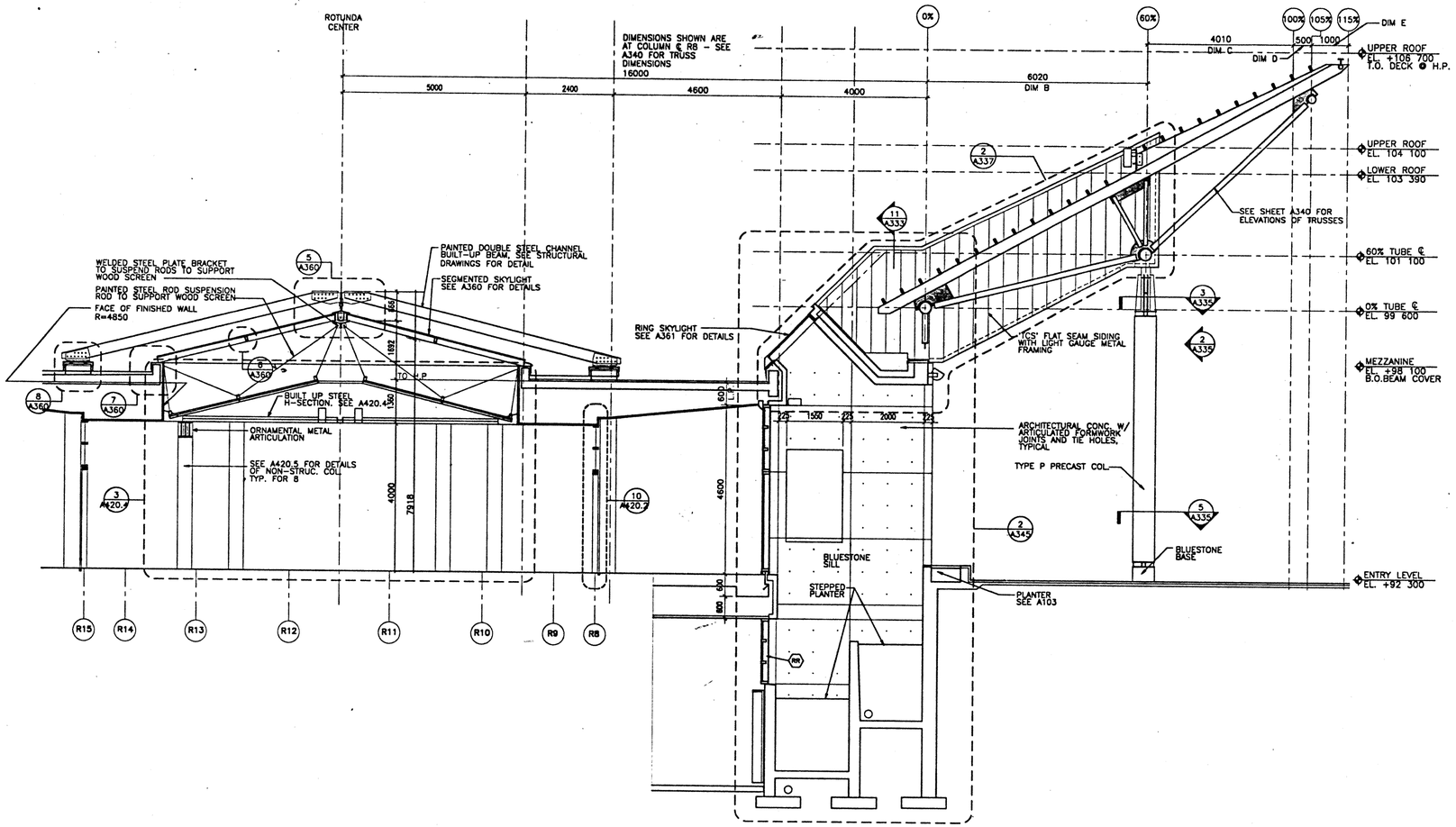

1 SECTION THROUGH LOBBY & ENTRY PLAZA
SCALE 1 : 50

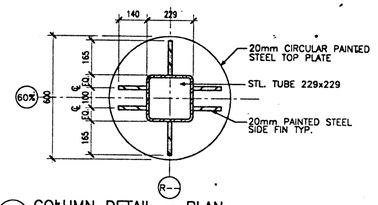

3 COLUMN DETAIL – PLAN
SCALE 1 : 10 ● TOP

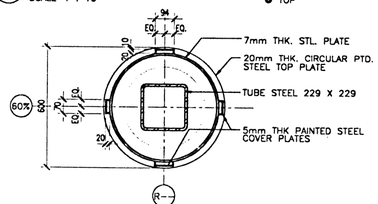

4 COLUMN DETAIL – PLAN
SCALE 1 : 10 ● STEEL BAND

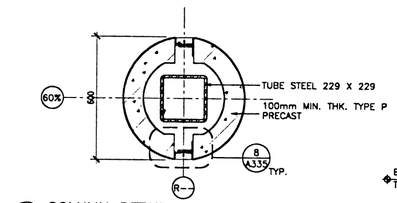

5 COLUMN DETAIL – PLAN
SCALE 1 : 10 ● PRECAST

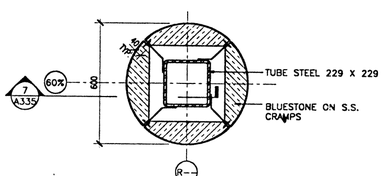

6 COLUMN DETAIL – PLAN
SCALE 1 : 10 BASE

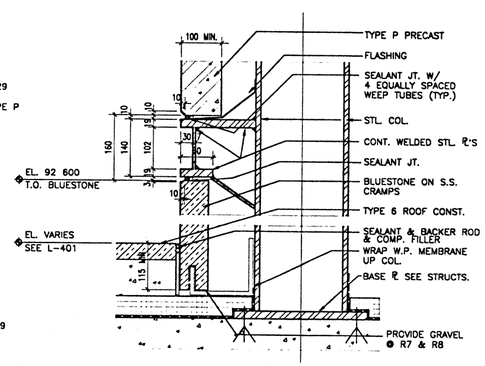

7 SECTION @ COL. BASE
SCALE 1 : 5

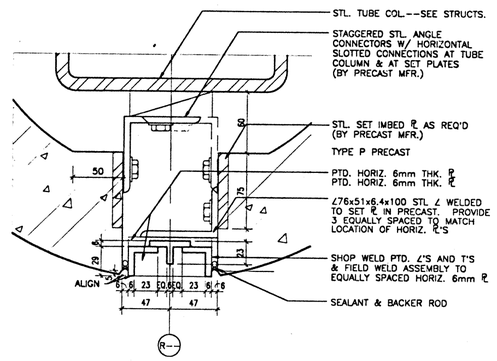

8 STEEL REVEAL @ PRECAST COL.
SCALE 1 : 2

241A335 6-26 95 10:38 am EST

NMAI
CULTURAL RESOURCES CENTER

Architect
Polshek Metcalf Tobey and Partners Joint Venture
James Stewart Polshek and Partners
320 West 13 Street
New York, NY 10014

Metcalf Tobey and Partners
1750 Presidents Street
Reston, Virginia 22090

In Association With
Native American Design Collaborative
Louis L. Weller, President
401 Alvarado Drive S.E. – Suite D
Albuquerque, New Mexico 87108

Structural Engineer
Cagley and Associates
6141 Executive Boulevard
Rockville, Maryland 20852

MEP Engineer
Syska and Hennessy, Inc.
11 West 42 Street
New York, New York 10036

(other consultants)

Key Plan

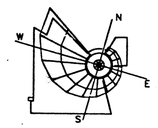

SMITHSONIAN INSTITUTION

Office of Design and Construction
955 L'Enfant Plaza, SW, Suite 3230
Washington, DC 20024

Project No.
ODC No. 912205B

Project Title
CULTURAL RESOURCES CENTER
SUITLAND, MARYLAND

Facility
NATIONAL MUSEUM OF THE AMERICAN INDIAN

Sheet Title
LOBBY & ENTRY PLAZA SECTION

Revisions Date

FINAL

Date Issued:	3.31.95	Sheet No.	A335
Scale:	1 : 50		
Drawn by:			
Checked by:	WK	137 OF 420	

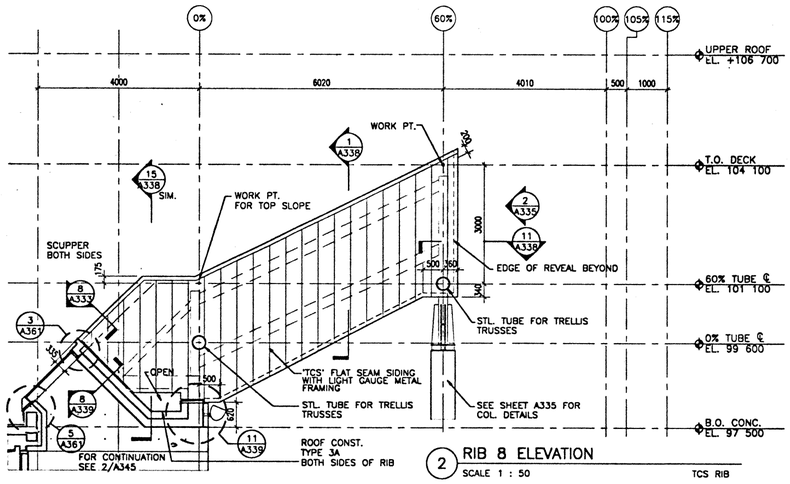

2 RIB 8 ELEVATION
SCALE 1 : 50 TCS RIB

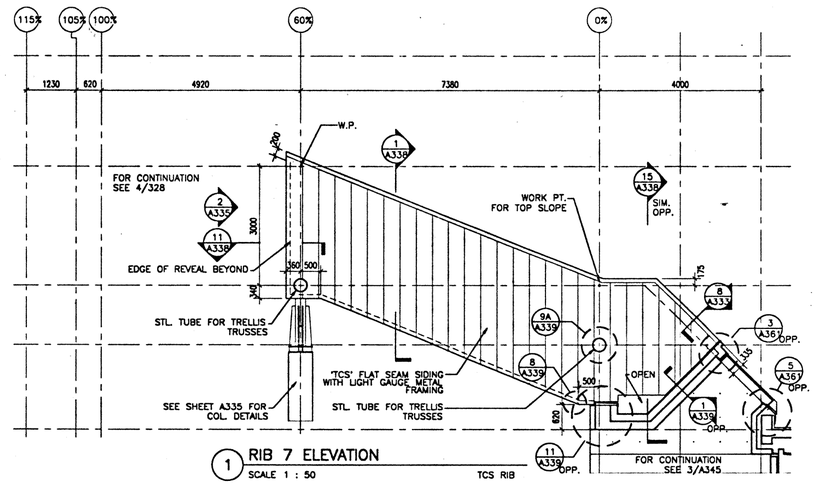

1 RIB 7 ELEVATION
SCALE 1 : 50 TCS RIB

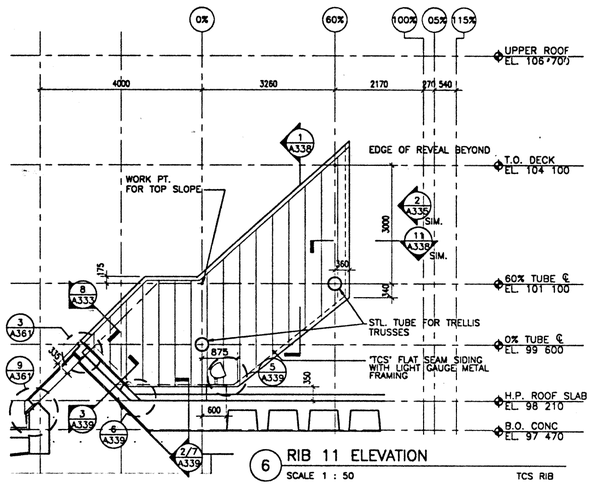

6 RIB 11 ELEVATION
SCALE 1 : 50 TCS RIB

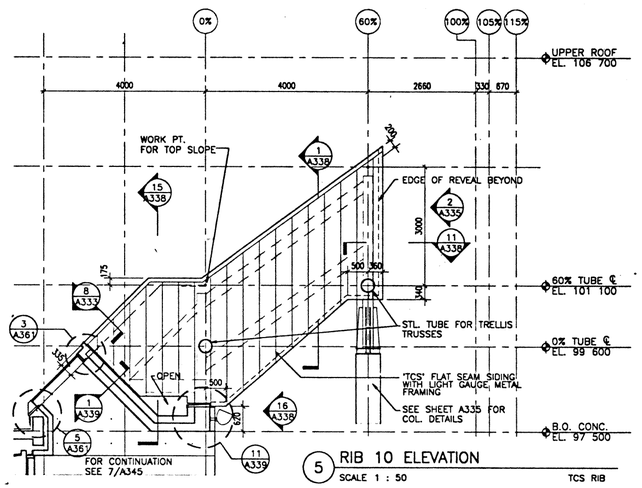

5 RIB 10 ELEVATION
SCALE 1 : 50 TCS RIB

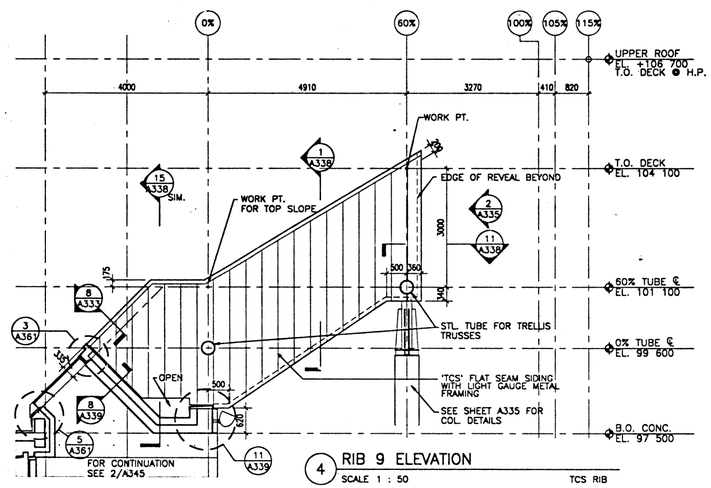

4 RIB 9 ELEVATION
SCALE 1 : 50 TCS RIB

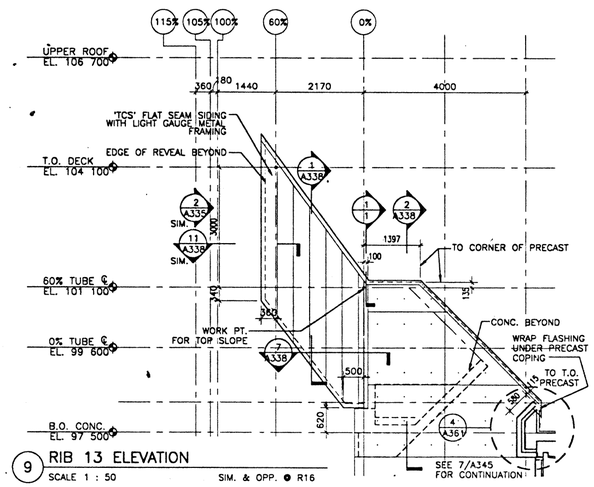

9 RIB 13 ELEVATION
SCALE 1 : 50 SIM. & OPP. ● R16

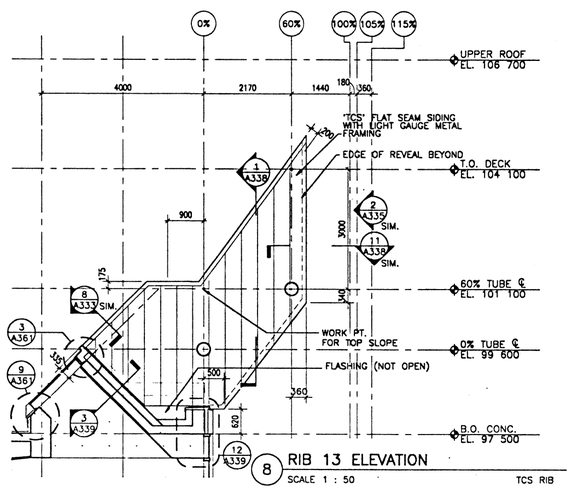

8 RIB 13 ELEVATION
SCALE 1 : 50 TCS RIB

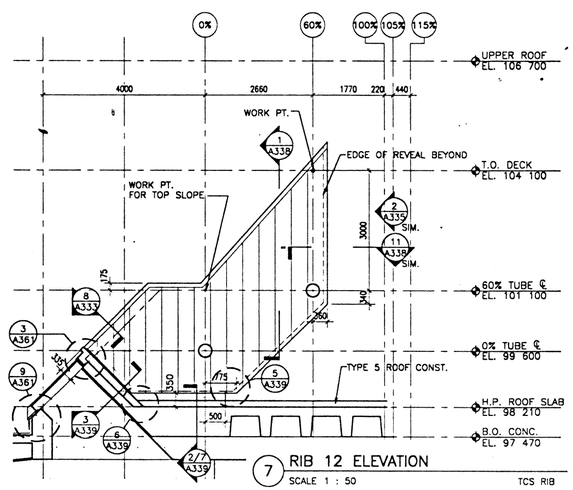

7 RIB 12 ELEVATION
SCALE 1 : 50 TCS RIB

K:\DWGS\PROJECT\NMAI9241\241A337 6-28-95 9:30 am EST

NMAI
CULTURAL RESOURCES CENTER

Architect
Polshek Metcalf Tobey and Partners Joint Venture

James Stewart Polshek and Partners
320 West 13 Street
New York, NY 10014

Metcalf Tobey and Partners
1750 Presidents Street
Reston, Virginia 22090

In Association With
Native American Design Collaborative

Louis L. Weller, President
401 Alvarado Drive S.E. – Suite D
Albuquerque, New Mexico 87108

Structural Engineer
Cagley and Associates
6141 Executive Boulevard
Rockville, Maryland 20852

MEP Engineer
Syska and Hennessy, Inc.
11 West 42 Street
New York, New York 10036

(other consultants)

Key Plan

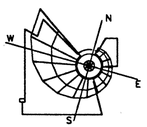

SMITHSONIAN INSTITUTION

Office of Design and Construction
955 L'Enfant Plaza, SW, Suite 3230
Washington, DC 20024

Project No.
ODC No. 9122C5B

Project Title
CULTURAL RESOURCES CENTER
SUITLAND, MARYLAND

Facility
NATIONAL MUSEUM OF THE AMERICAN INDIAN

Sheet Title
ENTRANCE CANOPY
RIB ELEVATIONS & DETAILS

Revisions	Date

FINAL

Date Issued:	3.31.95	Sheet No.	A337
Scale:	1 : 50		
Drawn by:	AB		
Checked by:	WWK	138 OF 420	

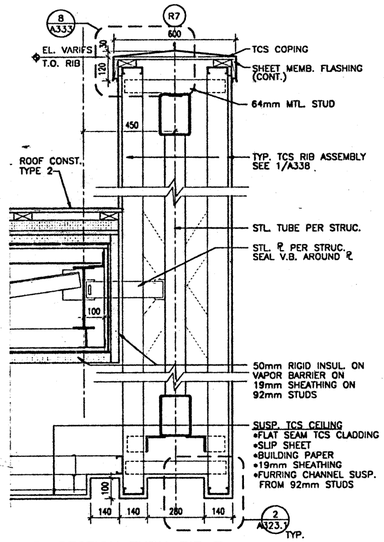

5 SECTION THRU RIB 7
SCALE 1 : 10

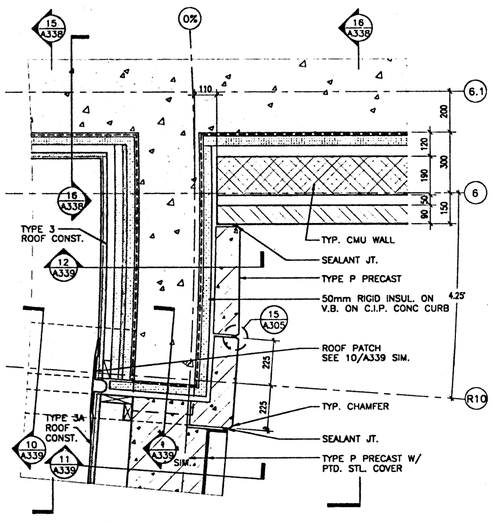

4 PLAN DETAIL
SCALE 1 : 10 THROUGH SPANDEL

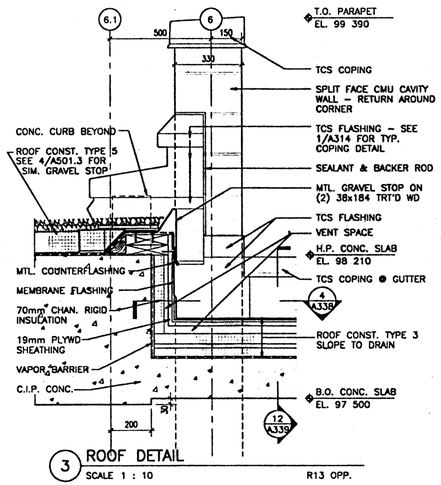

3 ROOF DETAIL
SCALE 1 : 10 R13 OPP.

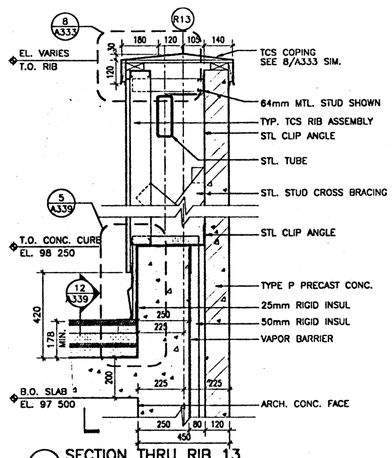

2 SECTION THRU RIB 13
SCALE 1 : 10 R16 OPP.

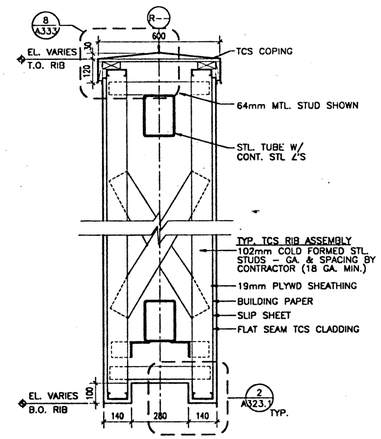

1 TYP. SECTION THRU RIB
SCALE 1 : 10

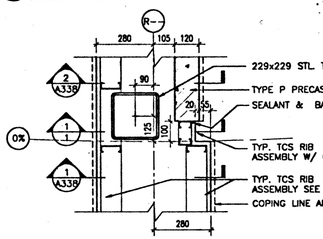

7 R13 PLAN DETAIL @ 0%
SCALE 1 : 10 R16 OPP.

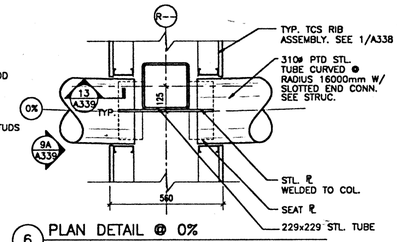

6 PLAN DETAIL @ 0%
SCALE 1 : 10

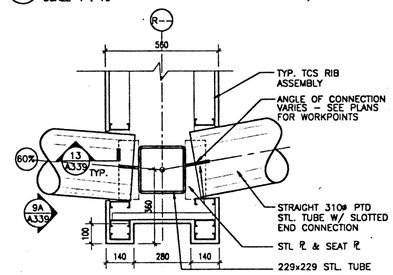

11 PLAN DETAIL @ 60%
SCALE 1 : 10

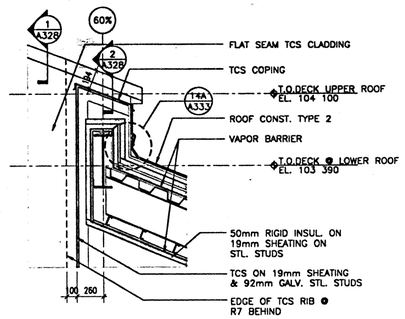

9 SECTION ADJACENT TO R7
SCALE 1 : 20 THROUGH GUTTER

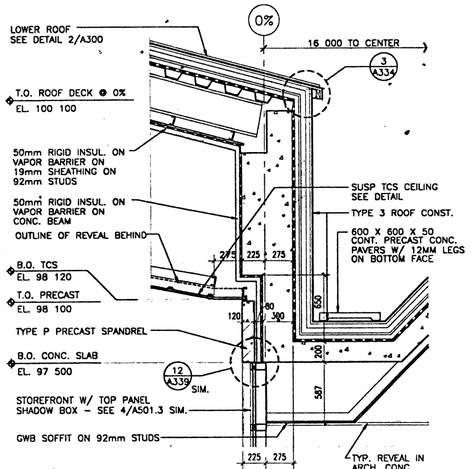

17 SECTION THROUGH GUTTER
SCALE 1 : 20 FROM R6.8 TO R7

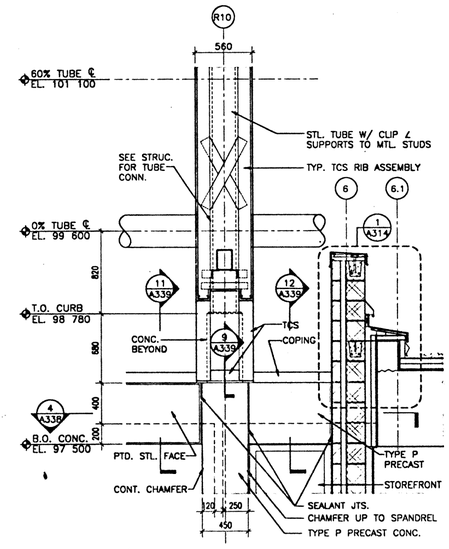

16 ELEV. / SECTION @ R10
SCALE 1 : 20 R7, R13,. R16 SIM.

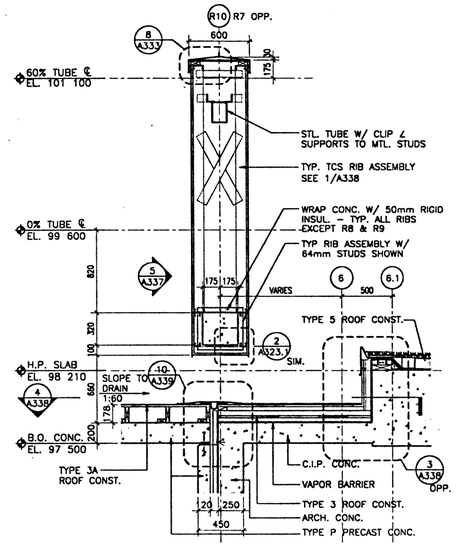

15 SECTION @ R10
SCALE 1 : 20 RIB 7 OPP.

241A338 4-3-95 10:24:33 am EST

NMAI CULTURAL RESOURCES CENTER

Architect
Polshek Metcalf Tobey and Partners Joint Venture

James Stewart Polshek and Partners
320 West 13 Street
New York, NY 10014

Metcalf Tobey and Partners
1750 Presidents Street
Reston, Virginia 22090

In Association With
Native American Design Collaborative

Louis L. Weller, President
401 Alvarado Drive S.E. – Suite D
Albuquerque, New Mexico 87108

Structural Engineer
Cagley and Associates
6141 Executive Boulevard
Rockville, Maryland 20852

MEP Engineer
Syska and Hennessy, Inc.
11 West 42 Street
New York, New York 10036

(other consultants)

Key Plan

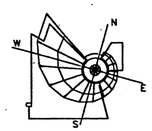

SMITHSONIAN INSTITUTION

Office of Design and Construction
955 L'Enfant Plaza, SW, Suite 3230
Washington, DC 20024

Project No.
ODC No. 912205B

Project Title
CULTURAL RESOURCES CENTER
SUITLAND, MARYLAND

Facility
NATIONAL MUSEUM OF THE AMERICAN INDIAN

Sheet Title
ENTRANCE CANOPY DETAILS

Revisions Date

FINAL

Date Issued: 3.31.95	Sheet No.
Scale: AS NOTED	A338
Drawn by:	
Checked by: WK	139 OF 420

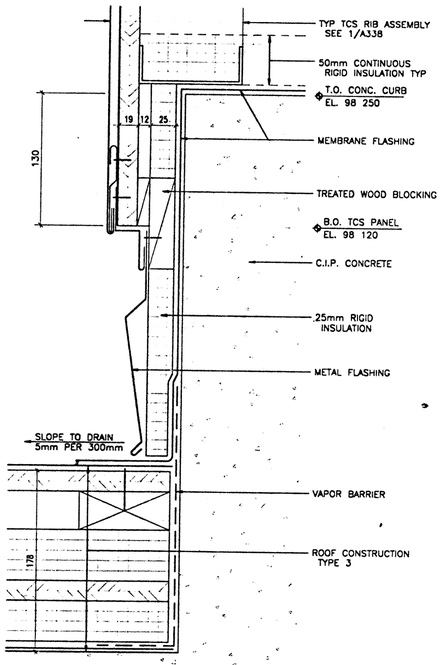

5 DETAIL AT RIB 13
SCALE 1 : 2

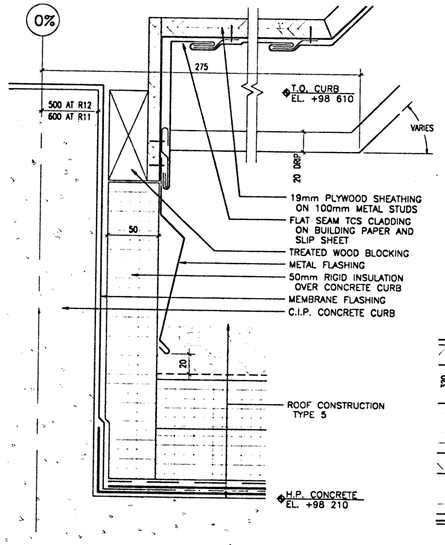

4 DETAIL AT RIBS 11 AND 12
SCALE 1 : 2 THROUGH REVEAL

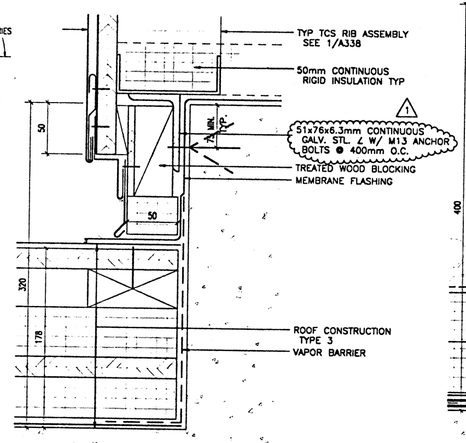

3 DETAIL AT SLOPED SURFACES OF RIBS
SCALE 1 : 2

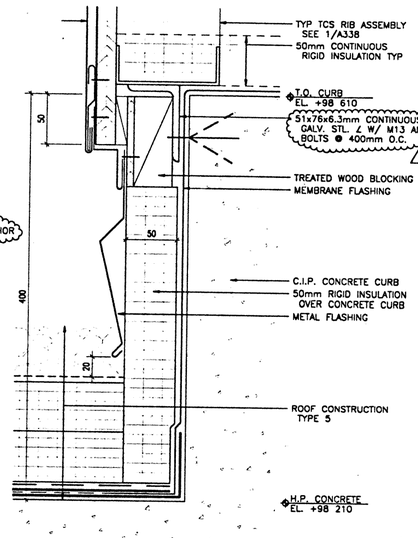

2 DETAIL AT RIBS 11 AND 12
SCALE 1 : 2

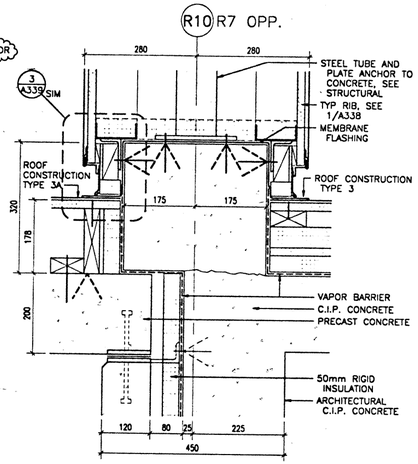

1 DETAIL
SCALE 1 : 5

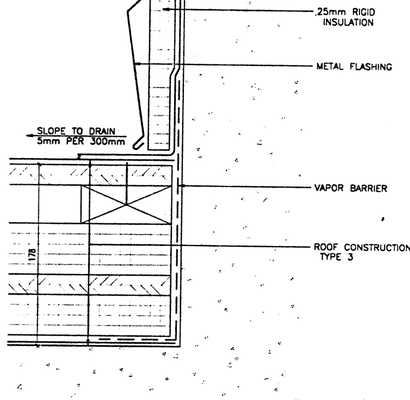

13 TCS @ TUBE/RIB JUNCTION
SCALE 1 : 1

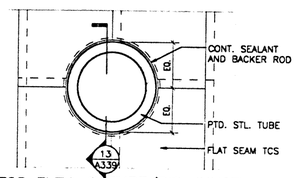

9A TCS ELEV. @ TUBE/RIB JUNCTION
SCALE NTS

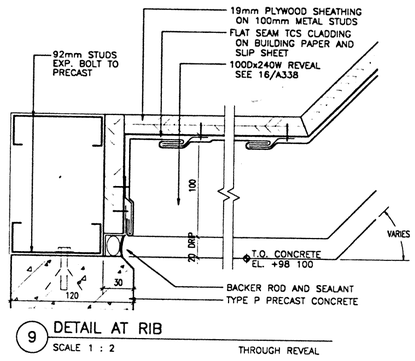

9 DETAIL AT RIB
SCALE 1 : 2 THROUGH REVEAL

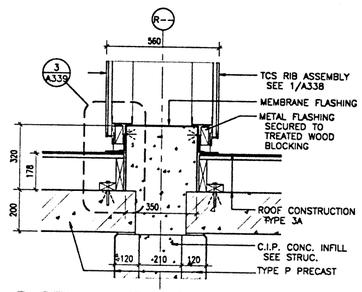

8 DETAIL @ R8 & R9
SCALE 1 : 10 ● 45° PRECAST FACE

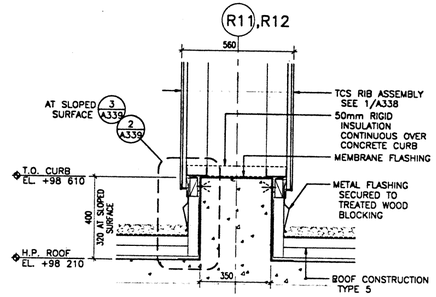

7 DETAIL AT RIBS 11 AND 12
SCALE 1 : 10

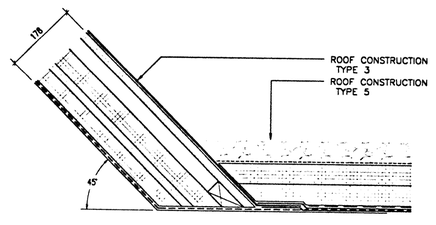

6 ROOF DETAIL
SCALE 1 : 5

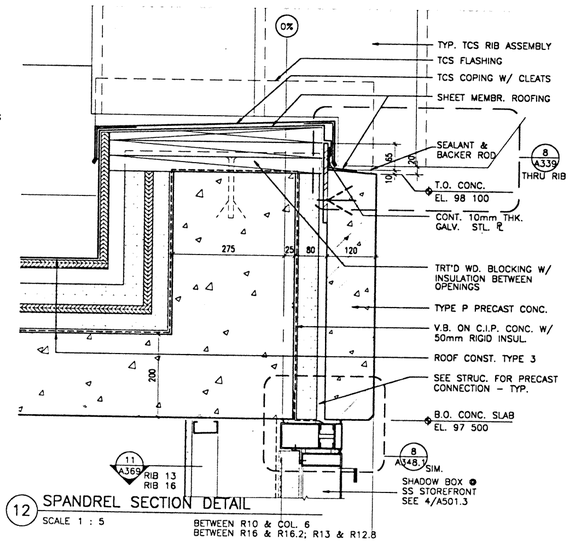

12 SPANDREL SECTION DETAIL
SCALE 1 : 5 BETWEEN R10 & COL. 6 BETWEEN R16 & R16.2; R13 & R12.8

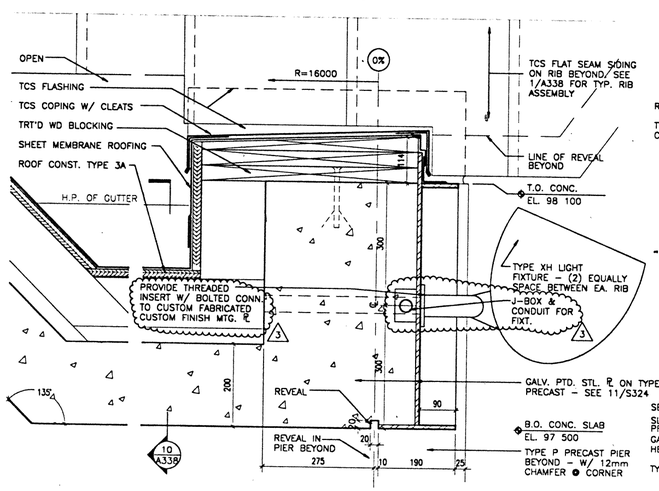

11 SPANDREL DETAIL
SCALE 1 : 5 BETWEEN R7 & R10

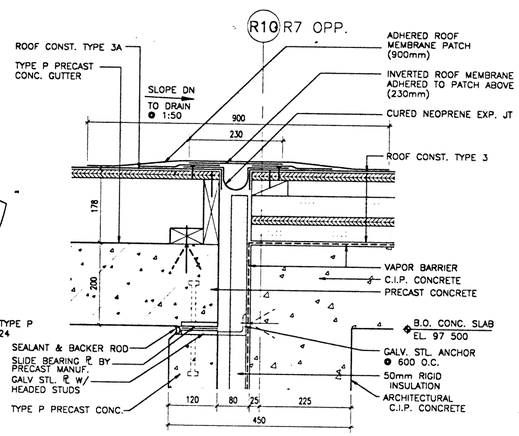

10 DETAIL
SCALE 1 : 5

241A339 10-2-96 6:18:40 pm EST

NMAI
CULTURAL RESOURCES CENTER

Architect
Polshek Metcalf Tobey and Partners Joint Venture

James Stewart Polshek and Partners
320 West 13 Street
New York, NY 10014

Metcalf Tobey and Partners
1750 Presidents Street
Reston, Virginia 22090

In Association With
Native American Design Collaborative

Louis L. Weller, President
401 Alvarado Drive S.E. – Suite D
Albuquerque, New Mexico 87108

Structural Engineer
Cagley and Associates
6141 Executive Boulevard
Rockville, Maryland 20852

MEP Engineer
Syska and Hennessy, Inc.
11 West 42 Street
New York, New York 10036

(other consultants)

Key Plan

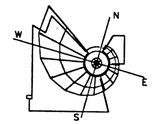

SMITHSONIAN INSTITUTION

Office of Design and Construction
955 L'Enfant Plaza, SW, Suite 3230
Washington, DC 20024

Project No.
ODC No. 912205B

Project Title
CULTURAL RESOURCES CENTER
SUITLAND, MARYLAND

Facility
NATIONAL MUSEUM OF THE AMERICAN INDIAN

Sheet Title
ENTRANCE CANOPY DETAILS

Revisions	Date
01 – AMENDMENT 1 THROUGH 8	9.30.96

FINAL

Date Issued: 3.31.95	Sheet No. A339
Scale: AS SHOWN	
Drawn by: AB/WJ	
Checked by: WWK	140 OF 420

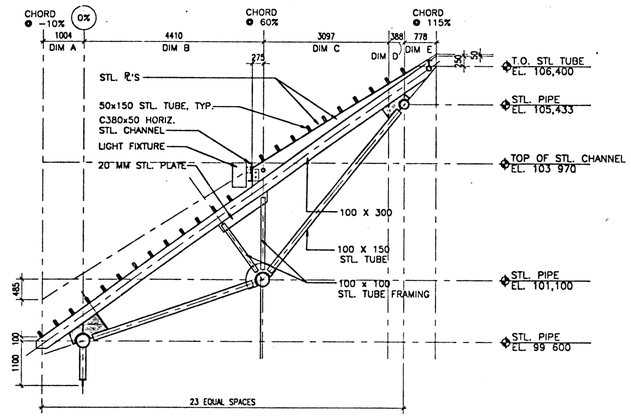

3 TRUSS @ 9.2
SCALE 1 : 50

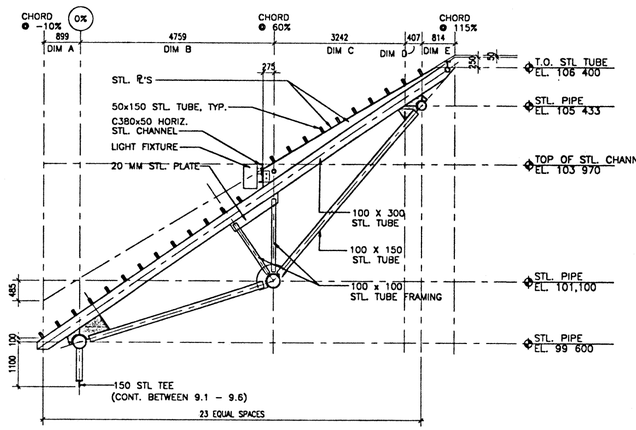

2 TRUSS @ 9.1
SCALE 1 : 50

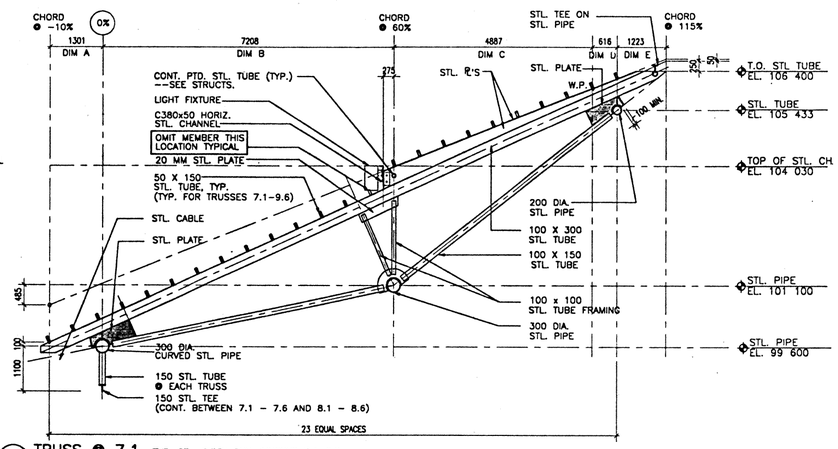

1 TRUSS @ 7.1 TYP. STL. SIZES FOR TRUSSES 7.1-9.6.
SCALE 1 : 50

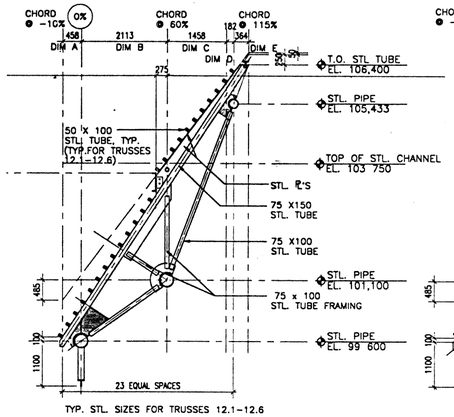

TYP. STL. SIZES FOR TRUSSES 12.1-12.6

7 TRUSS @ 12.6
SCALE 1 : 50

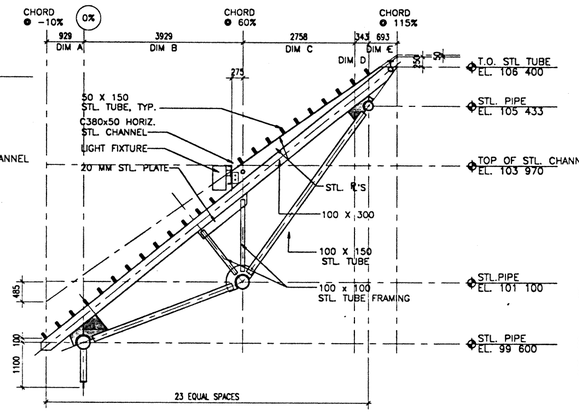

6 TRUSS @ 9.5
SCALE 1 : 50

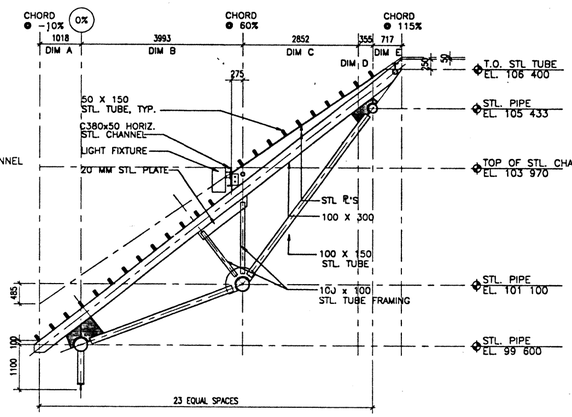

5 TRUSS @ 9.4
SCALE 1 : 50

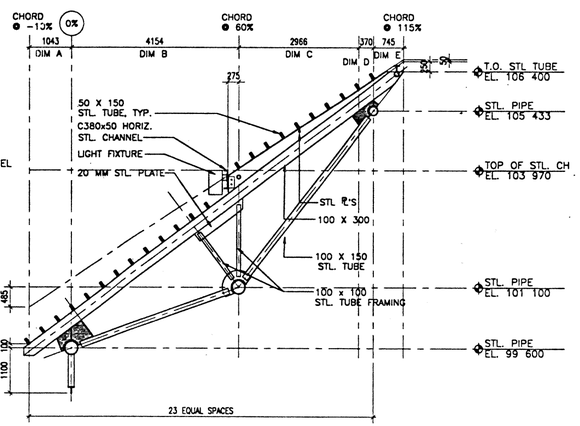

4 TRUSS @ 9.3
SCALE 1 : 50

	TRUSS NO.	DIM. A	DIM. B	DIM. C	DIM. D	DIM. E	T.O. STL. CHANNEL ±
O	7.1.	1301.3	7207.7	4886.8	616.2	1223.4	104 030
	7.2.	1389.9	6751.1	4667	587.3	1167.3	
	7.3	1411.5	6398.8	4468.1	560.9	1116.3	
	7.4	1372.3	6154.2	4294.7	537.8	1071.7	
	7.5	1272.2	6021.5	4150.8	518.5	1034.6	
	7.6	1109	6004.3	4038.8	503.2	1005.6	
	8.1	1082.1	5859	3979.4	496.9	994.1	104 000
	8.2	1179.8	5462.1	3802.1	475	950.2	
	8.3	1211.3	5163.5	3841.6	455.1	910.3	
	8.4	1179.7	4965.4	3502	437.9	875.7	
	8.5	1086	4871.4	3386.6	423.6	847.1	
	8.6	927.9	4884.2	3297	412.7	825.1	
O	9.1	898.8	4758.9	3241.8	406.7	814.3	103 970
O	9.2	1004.5	4409.9	3097.4	387.8	778.2	
O	9.3	1043.1	4153.9	2966.4	370.5	745.4	
O	9.4	1017.5	3992.8	2852.5	355.4	716.8	
O	9.5	928.8	3929.1	2758.5	342.8	693.2	
O	9.6	774.6	3965.2	2685.3	332.9	675	

	TRUSS NO.	DIM. A	DIM.B	DIM. C	DIM. D	DIM. E	T.O. STL. CHANNEL ±
O	10.1	750.7	3858.1	2635.2	327.3	664.2	103 920
	10.2	861.3	3549.2	2520	313.1	633.7	
	10.3	904	3328.9	2415.4	300.1	605.8	
	10.4	881.8	3198.7	2324.7	288.8	581.4	
	10.5	795.5	3160.6	2250.2	279.5	561.1	
	10.6	642.7	3216.7	2192.6	272.4	545.1	
	11.1	623.2	3126.4	2148.1	267.5	535.2	103 875
	11.2	740.2	2849.9	2054.8	255.8	511.7	
	11.3	788.6	2658.7	1970	245.1	490.2	
	11.4	771.4	2553.8	1896.7	235.8	471.5	
	11.5	689.4	2536.7	1836.7	228.2	456.2	
	11.6	540.1	2609.1	1790.3	222.3	444.3	
	12.1	525	2533.1	1750.6	217.9	435.8	103 750
	12.2	646.4	2282.5	1674.6	208.5	417.1	
	12.3	698.6	2114.1	1605.3	200	400	
	12.4	684.7	2028.8	1545.2	192.6	385.2	
	12.5	605.5	2027.9	1496.2	186.6	373.1	
O	12.6	458.4	2112.7	1458.1	182	363.8	

O TRUSS PROFILE SHOWN ON THIS SHEET

NOTES:
1. SEE DTL. 1 FOR TYP. STL. SIZES FOR TRUSSES 7.1-9.6.
2. SEE DTL. 10 FOR TYP. STL. SIZES FOR TRUSSES 10.1-11.6.
3. SEE DTL. 7 FOR TYP. SIZES FOR TRUSSES 12.1-12.6.
4. ALL STL. SHALL BE GALV. STL.

GENERAL NOTES:
SEE STRUCTURAL DRAWINGS SHEET S325 FOR TRELLIS DETAILS AND CONNECTIONS.

11 TYP. HORIZ. DIMENSIONS FOR THE TRUSSES
SCALE NTS

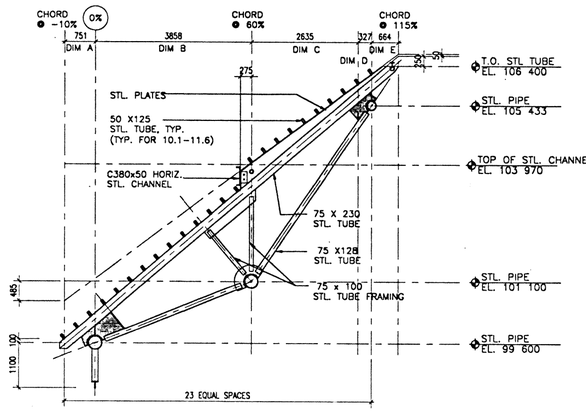

TYP. STL. SIZES FOR TRUSSES 10.1-11.6

10 TRUSS @ 10.1
SCALE 1 : 50

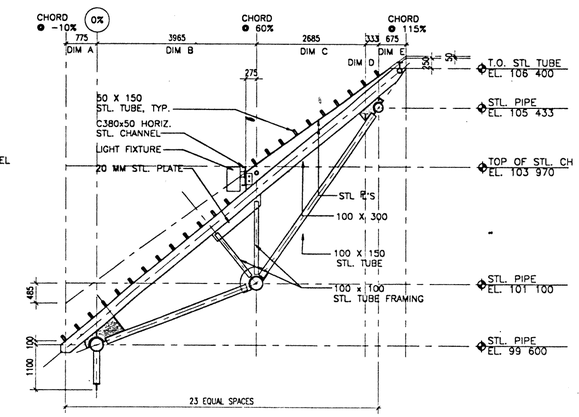

9 TRUSS @ 9.6
SCALE 1 : 50

241A340 6-26-95 10:15:41 am EST

NMAI
CULTURAL RESOURCES CENTER

Architect.
Polshek Metcalf Tobey and Partners Joint Venture

James Stewart Polshek and Partners
320 West 13 Street
New York, NY 10014

Metcalf Tobey and Partners
1750 Presidents Street
Reston, Virginia 22090

In Association With
Native American Design Collaborative
Louis L. Weller, President
401 Alvarado Drive S.E. - Suite D
Albuquerque, New Mexico 87108

Structural Engineer
Cagley and Associates
6141 Executive Boulevard
Rockville, Maryland 20852

MEP Engineer
Syska and Hennessy, Inc.
11 West 42 Street
New York, New York 10036

(other consultants)

Key Plan

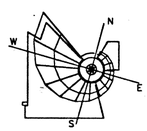

SMITHSONIAN INSTITUTION

Office of Design and Construction
955 L'Enfant Plaza, SW, Suite 3230
Washington, DC 20024

Project No.
ODC No. 912205B

Project Title
CULTURAL RESOURCES CENTER
SUITLAND, MARYLAND

Facility
NATIONAL MUSEUM OF THE AMERICAN INDIAN

Sheet Title
ROOF TRELLIS DETAILS
TRUSS PROFILES

Revisions Date

FINAL

Date Issued: 3.31.95	Sheet No. A340
Scale: 1 : 50	
Drawn by: BJ	
Checked by: WK	141 OF 420

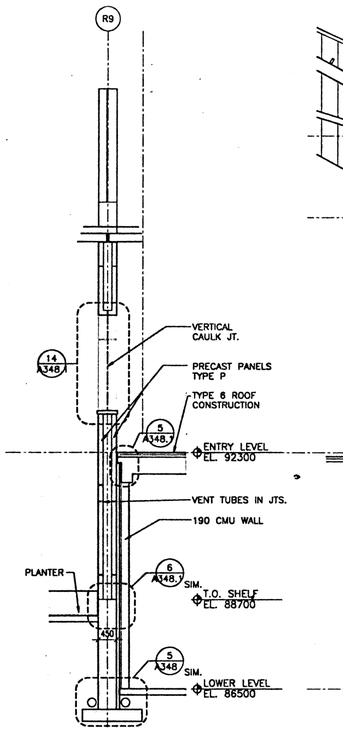

4 SECTION OF RIB 9
SCALE 1 : 50 THROUGH R9

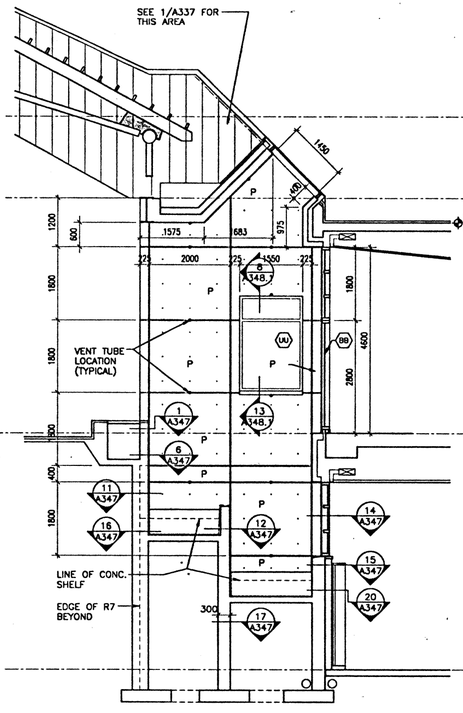

3 SECTION – RIB 7 ELEVATION
SCALE 1 : 50 THROUGH PLANTERS

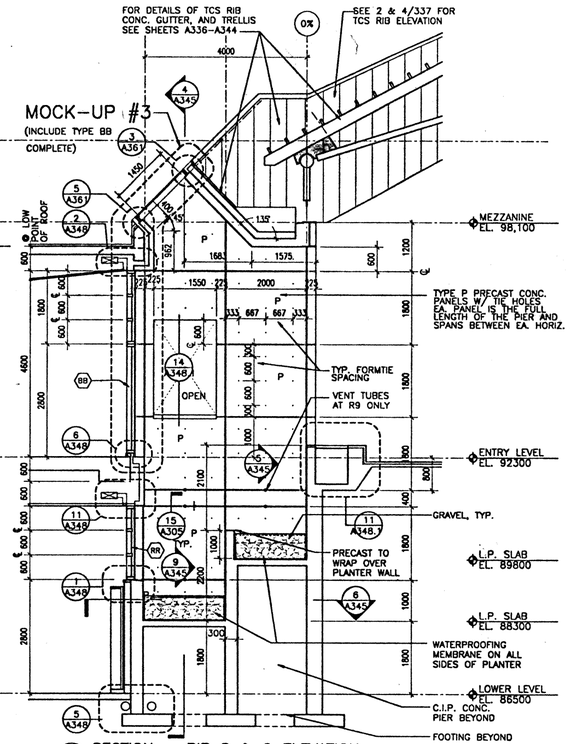

2 SECTION – RIB 8 & 9 ELEVATION
SCALE 1 : 50 THROUGH PLANTERS

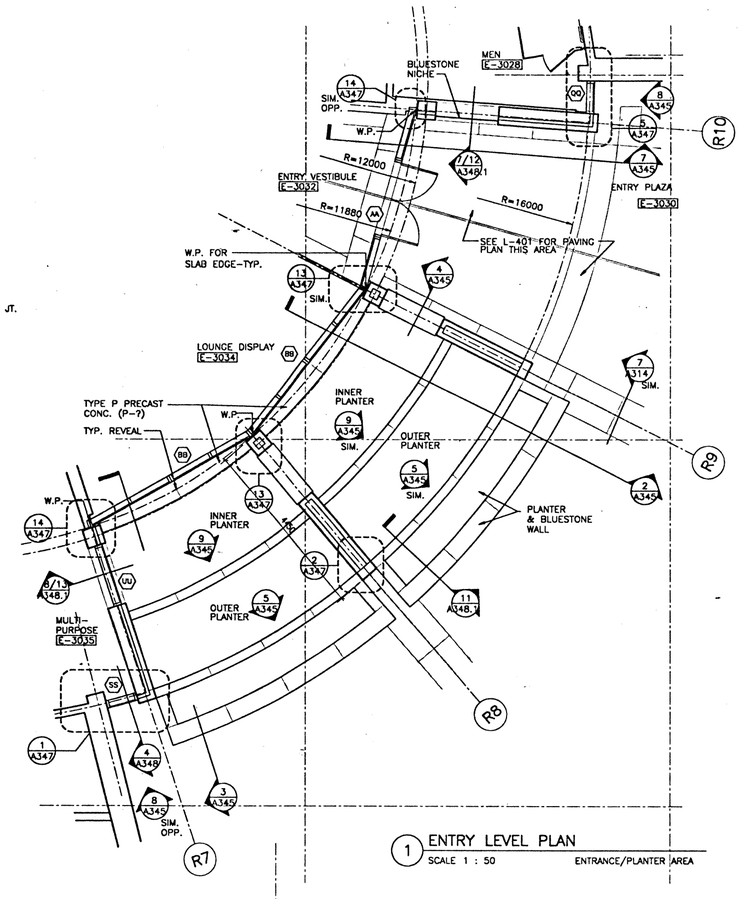

1 ENTRY LEVEL PLAN
SCALE 1 : 50 ENTRANCE/PLANTER AREA

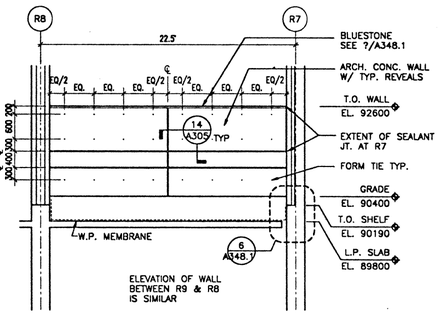

5 ELEVATION/SEC. OUTER PLANTER WALL
SCALE 1 : 50 FLATTENED ELEVATION

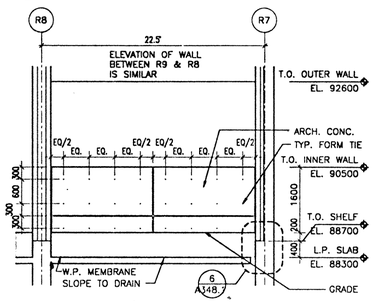

9 ELEVATION/SEC. INNER PLANTER WALL
SCALE 1 : 50 FLATTENED ELEVATION

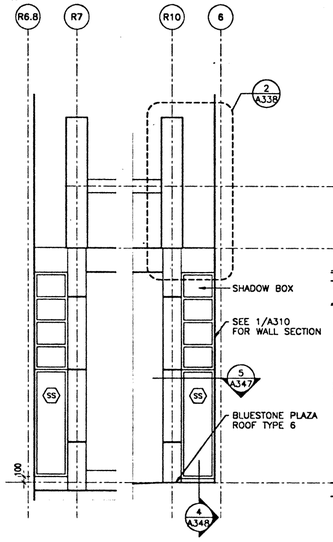

8 RIB 7/10 SHORT ELEVATION
SCALE 1 : 50

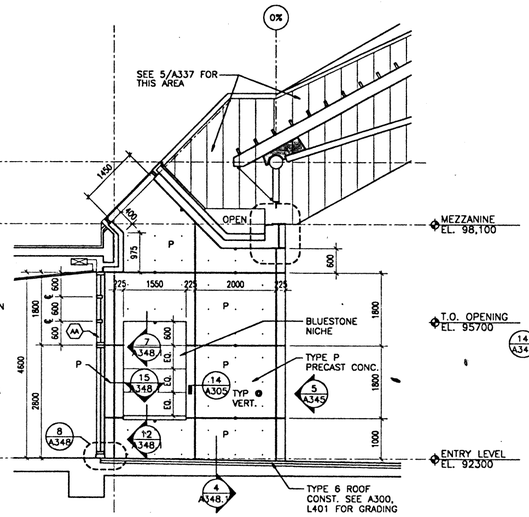

7 SECTION – RIB 10 ELEVATION
SCALE 1 : 50 THROUGH LOBBY & ENTRY PLAZA

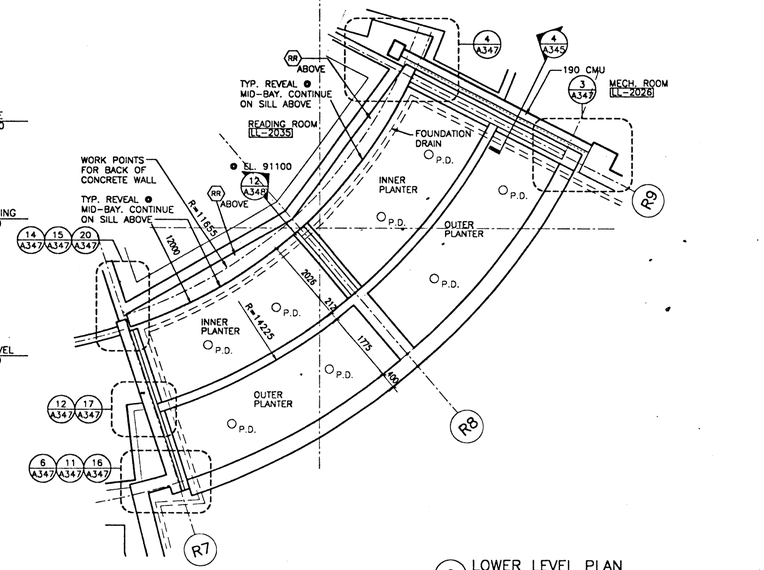

6 LOWER LEVEL PLAN
SCALE 1 : 50 CUT AT EL. 88500

NMAI CULTURAL RESOURCES CENTER

Architect
Polshek Metcalf Tobey and Partners Joint Venture

James Stewart Polshek and Partners
320 West 13 Street
New York, NY 10014

Metcalf Tobey and Partners
1750 Presidents Street
Reston, Virginia 22090

In Association With
Native American Design Collaborative

Louis L. Weller, President
401 Alvarado Drive S.E. – Suite D
Albuquerque, New Mexico 87108

Structural Engineer
Cagley and Associates
6141 Executive Boulevard
Rockville, Maryland 20852

MEP Engineer
Syska and Hennessy, Inc.
11 West 42 Street
New York, New York 10036

(other consultants)

Key Plan

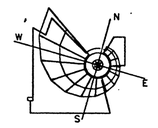

SMITHSONIAN INSTITUTION

Office of Design and Construction
955 L'Enfant Plaza, SW, Suite 3230
Washington, DC 20024

Project No.
ODC No. 912205B

Project Title
CULTURAL RESOURCES CENTER
SUITLAND, MARYLAND

Facility
NATIONAL MUSEUM OF THE AMERICAN INDIAN

Sheet Title
ENTRY PLANTER AREA PLANS, & SECTIONS

Revisions Date

FINAL

Date Issued:	3.31.95	Sheet No.	A345
Scale:	1 : 50		
Drawn by:	AB		
Checked by:	WK	142 OF 420	

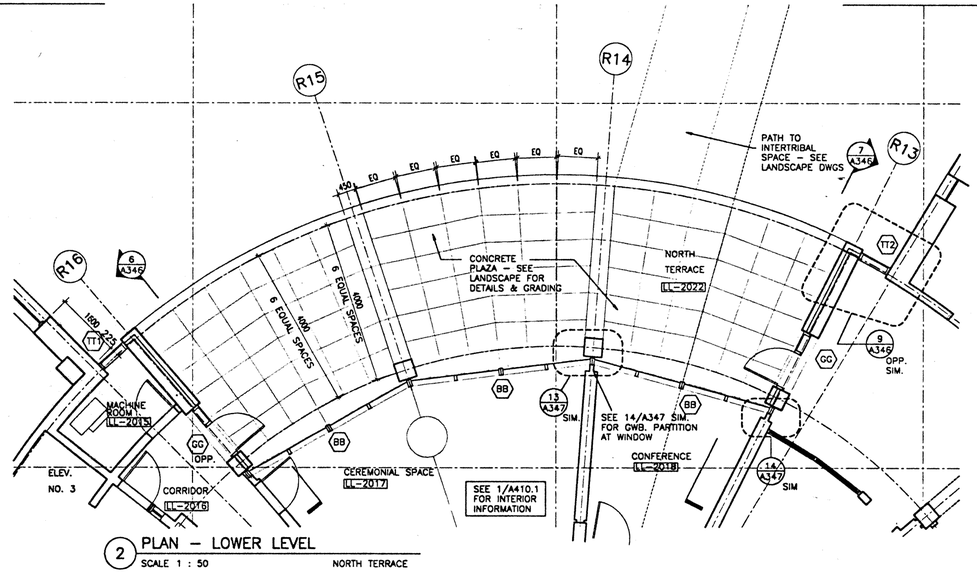

2 PLAN – LOWER LEVEL
SCALE 1 : 50 NORTH TERRACE

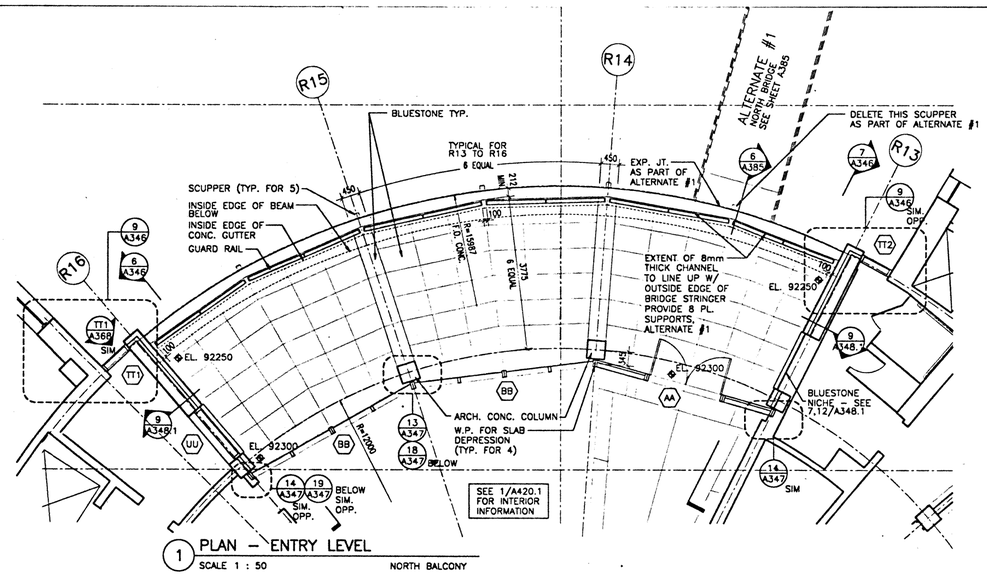

1 PLAN – ENTRY LEVEL
SCALE 1 : 50 NORTH BALCONY

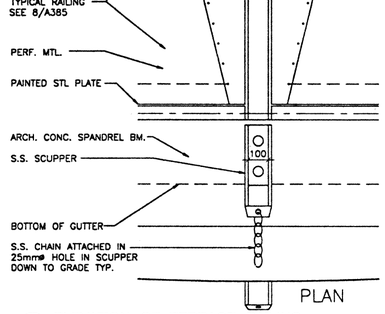

5 ELEVATION OF TERRACE RAILING
SCALE 1 : 10

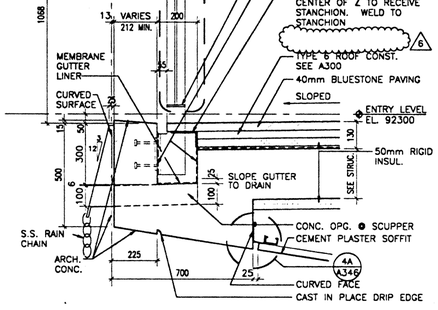

4 SECTION @ NORTH TERRACE RAILING
SCALE 1 : 10

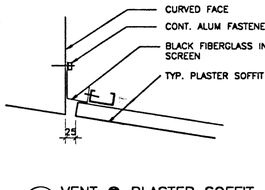

4A VENT @ PLASTER SOFFIT
SCALE 1 : 5

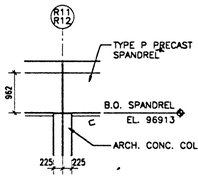

7A PARTIAL ELEVATION
SCALE 1 : 50

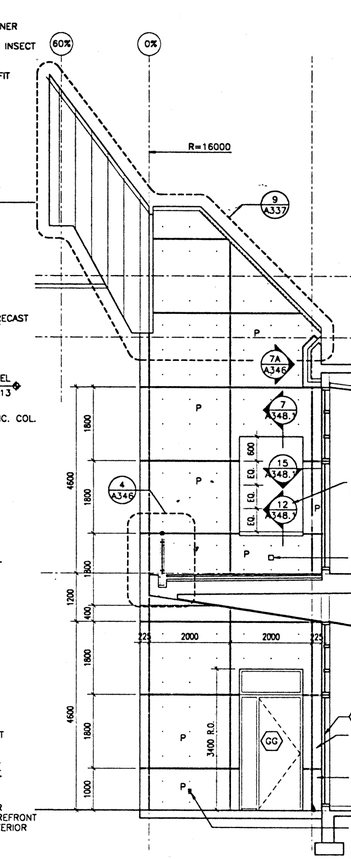

7 SECTION – RIB 13 ELEVATION
SCALE 1 : 50 NORTH TERRACE

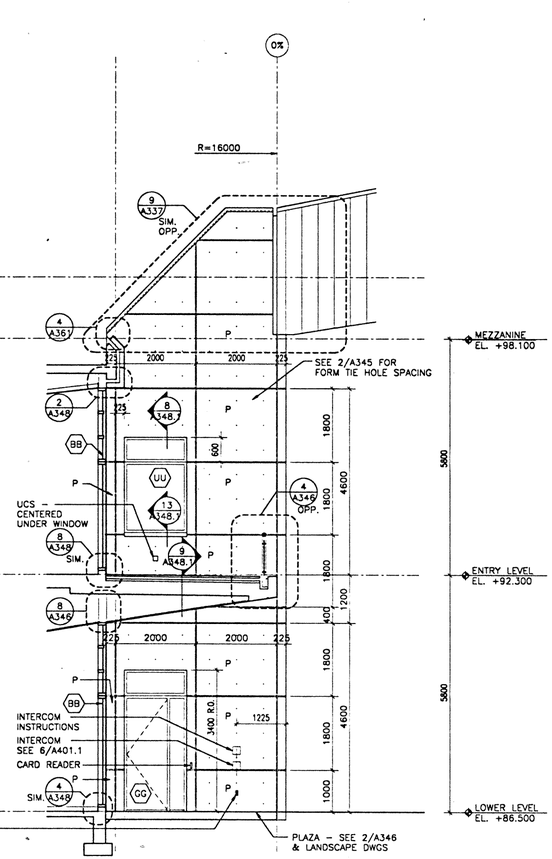

6 SECTION – RIB 16 ELEVATION
SCALE 1 : 50 NORTH TERRACE

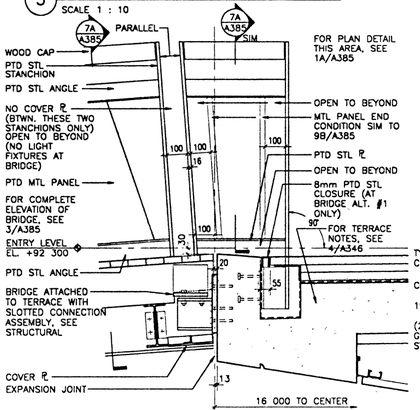

10 SECTION @ NORTH TERRACE AND BRIDGE
SCALE 1 : 10 ADD. ALT. #1 ONLY

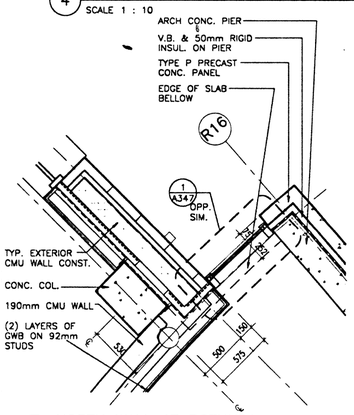

9 NORTH WALL AT ROTUNDA
SCALE 1 : 20

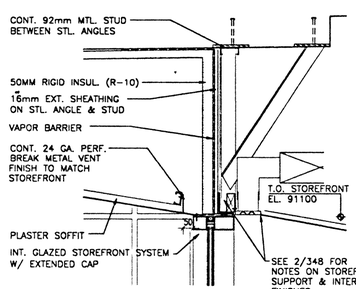

8 SECTION OF HEAD CONDITION
SCALE 1 : 10 NORTH PLAZA

NMAI
CULTURAL RESOURCES CENTER

Architect
Polshek Metcalf Tobey and Partners Joint Venture
James Stewart Polshek and Partners
320 West 13 Street
New York, NY. 10014
Metcalf Tobey and Partners
1750 Presidents Street
Reston, Virginia 22090

In Association With
Native American Design Collaborative
Louis L. Weller, President
401 Alvarado Drive S.E. – Suite D
Albuquerque, New Mexico 87108

Structural Engineer
Cagley and Associates
6141 Executive Boulevard
Rockville, Maryland 20852

MEP Engineer
Syska and Hennessy, Inc.
11 West 42 Street
New York, New York 10036

(other consultants)

Key Plan

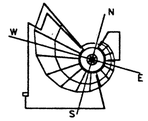

SMITHSONIAN INSTITUTION

Office of Design and Construction
955 L'Enfant Plaza, SW, Suite 3230
Washington, DC 20024

Project No.
ODC No. 912205B

Project Title
CULTURAL RESOURCES CENTER
SUITLAND, MARYLAND

Facility
NATIONAL MUSEUM OF THE AMERICAN INDIAN

Sheet Title
NORTH TERRACE
SECTION, PLAN & DETAILS

01 – AMENDMENT 1 THROUGH 8 9.30.96
Revisions Date

FINAL

Date Issued:	3.31.95	Sheet No.	A346
Scale:	AS NOTED		
Drawn by:	AB		
Checked by:	WK	143 OF 420	

241A346 10-2-96 6:21:28 pm ESI

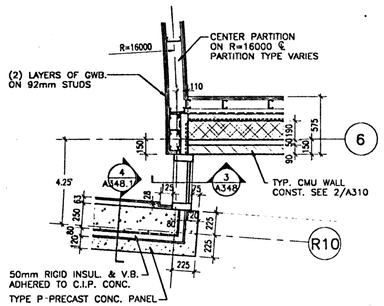

5 PLAN DETAIL
SCALE 1 : 20

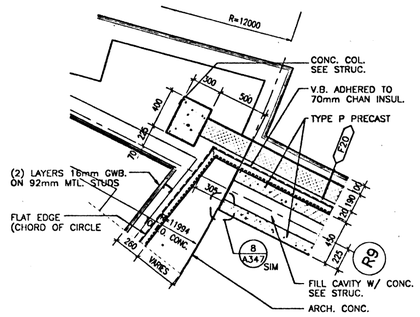

4 PLAN DETAIL – R9 NORTH END
SCALE 1 : 20 ● EL. 89000

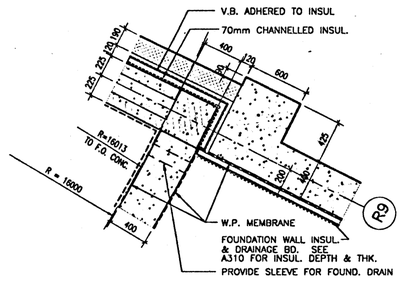

3 PLAN DETAIL – R9 SOUTH END
SCALE 1 : 20

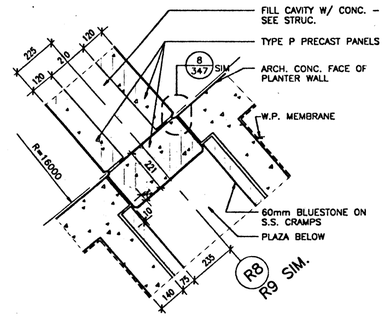

2 PLAN DETAIL – R9 SOUTH END
SCALE 1 : 10

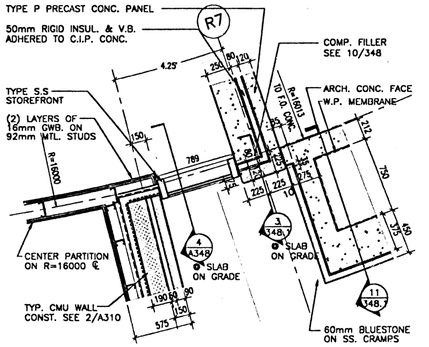

1 PLAN DETAIL – R7 SOUTH END
SCALE 1 : 20 ● EL. 92300

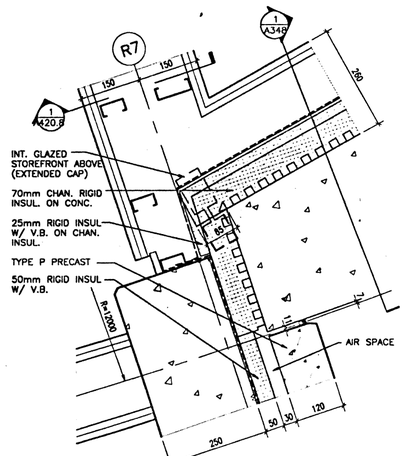

15 PLAN DETAIL – R7 NORTH END
SCALE 1 : 5 ● CONC. SILL CONDITION

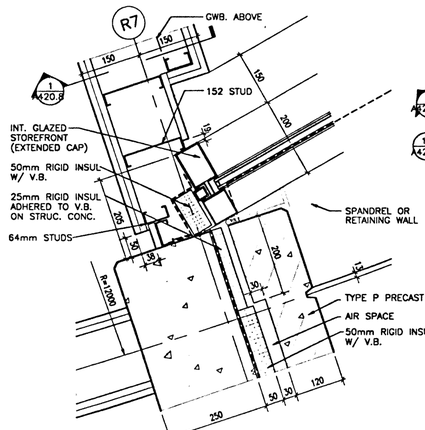

14 PLAN DETAIL R7 R10 R13 R16 SIMILAR
SCALE 1 : 5 STORFRONT – END CONDITION

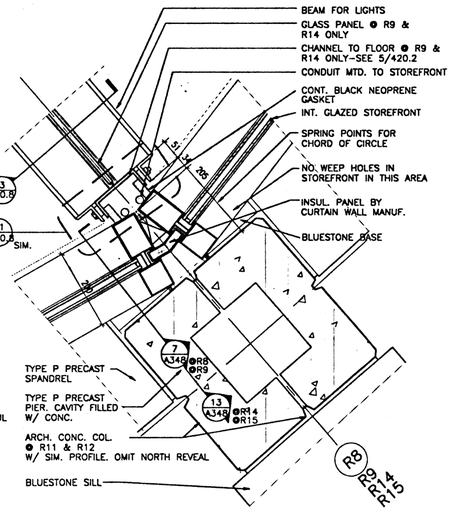

13 PLAN DETAIL
SCALE 1 : 5 ● PIER STORFRONT – CONNECTION

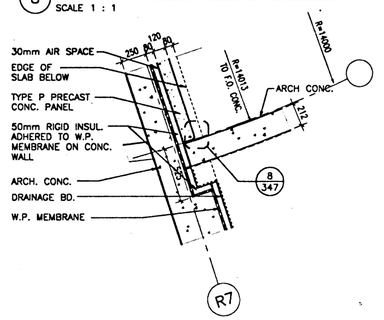

12 PLAN DETAIL – R7 MIDDLE
SCALE 1 : 20 ● EL. 91100

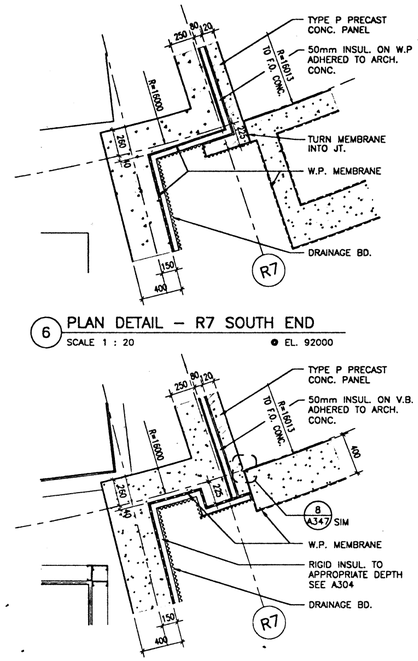

11 PLAN DETAIL – R7 SOUTH END
SCALE 1 : 20 ● EL. 91100

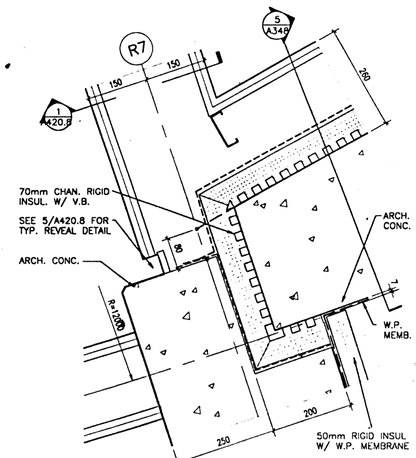

20 PLAN DETAIL – R7 NORTH END
SCALE 1 : 5 ● EL. 88500

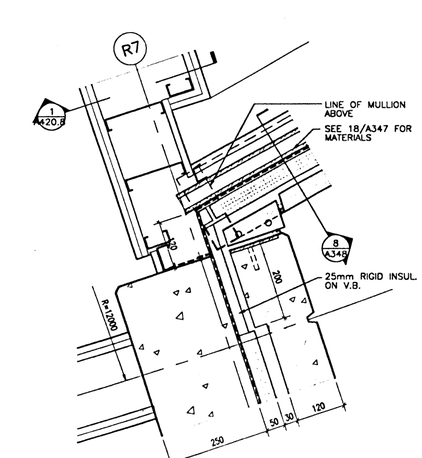

19 PLAN DETAIL R7 R10 R13 R16 SIMILAR
SCALE 1 : 5 BLUE STONE BASE END CONDITION

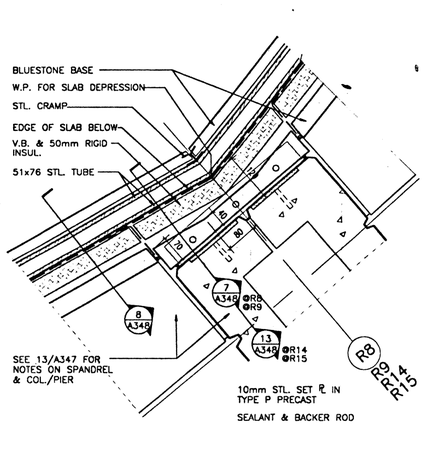

18 PLAN DETAIL
SCALE 1 : 5 ● PIER STORFRONT – CONNECTION

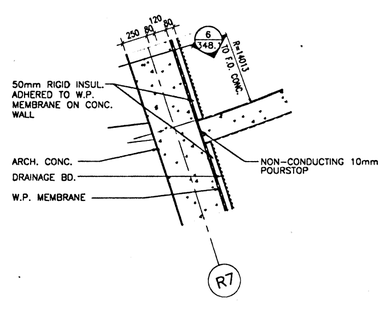

17 PLAN DETAIL – R7 MIDDLE
SCALE 1 : 20 ● EL. 88500

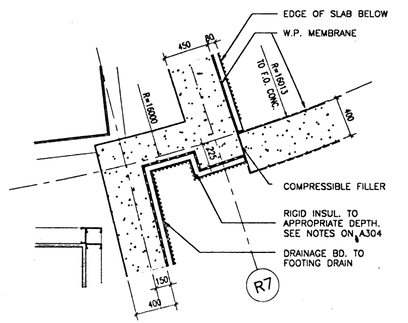

16 PLAN DETAIL – R7 SOUTH END
SCALE 1 : 20 ● EL. 88500

241A347 4-3-95 10:33:28 am EST

NMAI
CULTURAL RESOURCES CENTER

Architect
Polshek Metcalf Tobey and Partners Joint Venture

James Stewart Polshek and Partners
320 West 13 Street
New York, NY 10014

Metcalf Tobey and Partners
1750 Presidents Street
Reston, Virginia 22090

In Association With
Native American Design Collaborative

Louis L. Weller, President
401 Alvarado Drive S.E. – Suite D
Albuquerque, New Mexico 87108

Structural Engineer
Cagley and Associates
6141 Executive Boulevard
Rockville, Maryland 20852

MEP Engineer
Syska and Hennessy, Inc.
11 West 42 Street
New York, New York 10036

(other consultants)

Key Plan

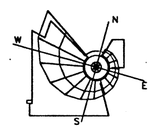

SMITHSONIAN INSTITUTION

Office of Design and Construction
955 L'Enfant Plaza, SW, Suite 3230
Washington, DC 20024

Project No.
ODC No. 912205B

Project Title
CULTURAL RESOURCES CENTER
SUITLAND, MARYLAND

Facility
NATIONAL MUSEUM OF THE AMERICAN INDIAN

Sheet Title
ROTUNDA AREA
PLAN DETAILS

Revisions Date

FINAL

Date Issued:	3.31.95	Sheet No.	A347
Scale:	AS NOTED		
Drawn by:	AB		
Checked by:	WK	144 OF 420	

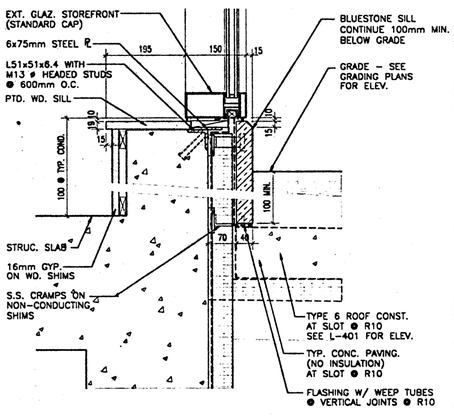

4 SILL @ STOREFRONT SS & TT
SCALE 1 : 5 SECTION

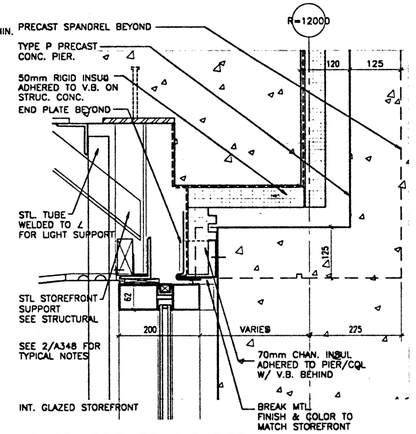

3 SPANDREL BEAM @ PIER
SCALE 1 : 5 ENTRY LEVEL ABOVE ENTRY

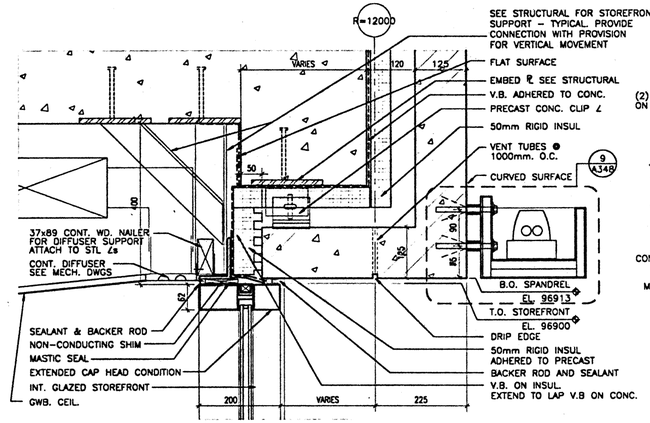

2 BOTTOM OF SPANDREL
SCALE 1 : 5 ENTRY LEVEL ABOVE ENTRY

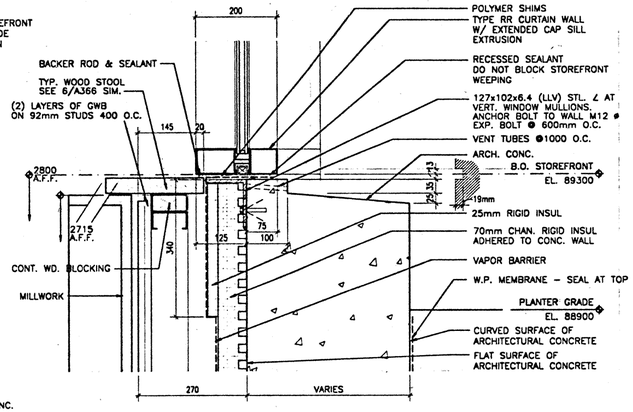

1 STOREFRONT SILL
SCALE 1 : 5 READING ROOM

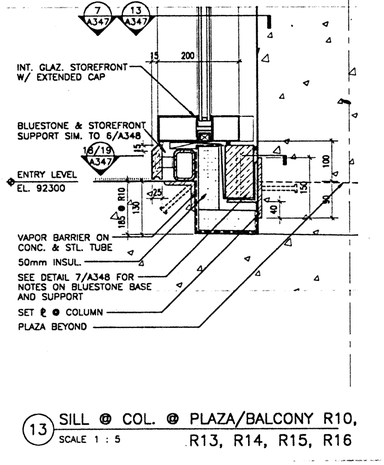

8 SILL DETAIL @ PLAZA/BALCONY
SCALE 1 : 5

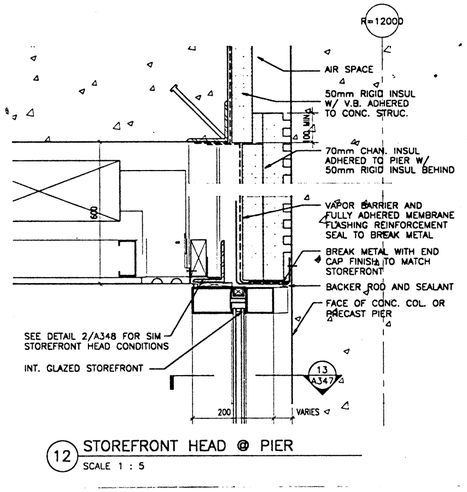

7 SILL AT PIER R7, R8, R9
SCALE 1 : 5 ENTRY LEVEL ABOVE PLANTERS

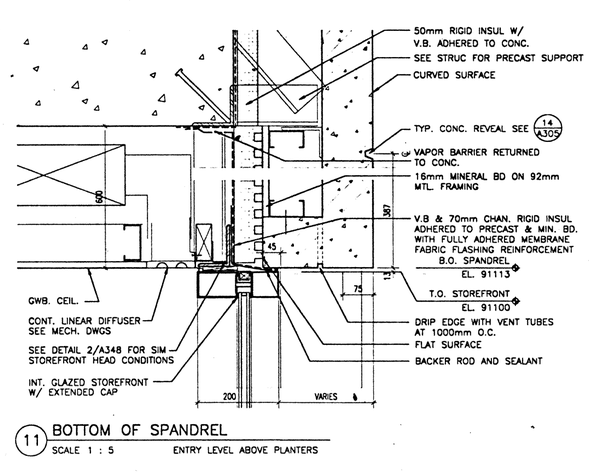

6 TOP OF SPANDREL
SCALE 1 : 5 ENTRY LEVEL ABOVE PLANTERS

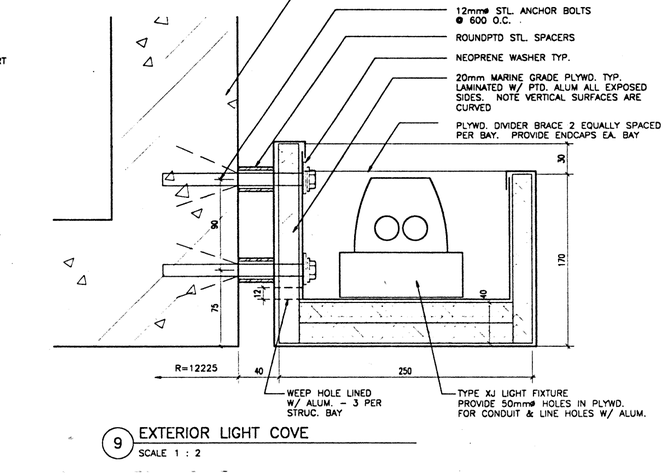

5 BASE OF FOUNDATION WALL (COLD)
SCALE 1 : 5 READING ROOM & R9

13 SILL @ COL. @ PLAZA/BALCONY R10, R13, R14, R15, R16
SCALE 1 : 5

12 STOREFRONT HEAD @ PIER
SCALE 1 : 5

11 BOTTOM OF SPANDREL
SCALE 1 : 5 ENTRY LEVEL ABOVE PLANTERS

9 EXTERIOR LIGHT COVE
SCALE 1 : 2

241A348 10-2-96 6:24:44 pm EST

NMAI
CULTURAL RESOURCES CENTER

Architect
Polshek Metcalf Tobey and Partners Joint Venture
James Stewart Polshek and Partners
320 West 13 Street
New York, NY 10014

Metcalf Tobey and Partners
1750 Presidents Street
Reston, Virginia 22090

In Association With
Native American Design Collaborative
Louis L. Weller, President
401 Alvarado Drive S.E. - Suite D
Albuquerque, New Mexico 87108

Structural Engineer
Cagley and Associates
6141 Executive Boulevard
Rockville, Maryland 20852

MEP Engineer
Syska and Hennessy, Inc.
11 West 42 Street
New York, New York 10036

(other consultants)

Key Plan

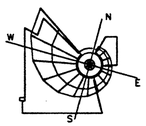

SMITHSONIAN INSTITUTION

Office of Design and Construction
955 L'Enfant Plaza, SW, Suite 3230
Washington, DC 20024

Project No.
ODC No. 912205B

Project Title
CULTURAL RESOURCES CENTER
SUITLAND, MARYLAND

Facility
NATIONAL MUSEUM OF THE AMERICAN INDIAN

Sheet Title
ROTUNDA AREA
WINDOW & CONC. DETAILS

01 - AMENDMENT 1 THROUGH 8 9.30.96
Revisions Date

FINAL

Date issued:	3.31.95	Sheet No.	A348
Scale:	AS NOTED		
Drawn by:	AB		
Checked by:	WK	145 OF 420	

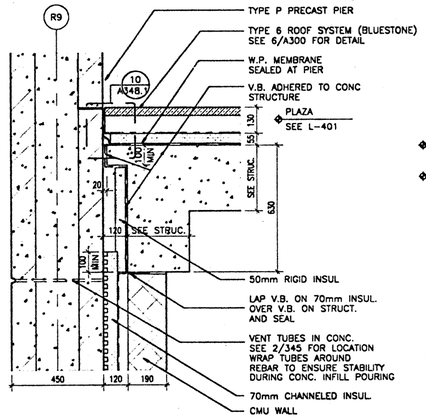

5 PLAZA @ R9 PIER
SCALE 1 : 10 SECTION

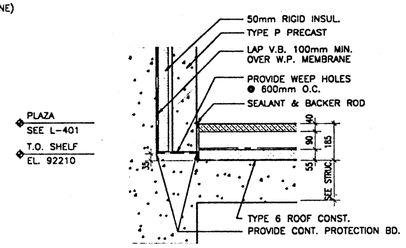

4 PRECAST BEARING @ R10
SCALE 1 : 10 TYPE P

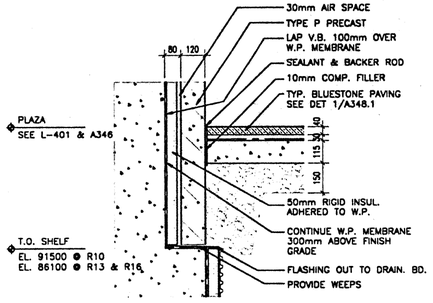

3 PLAZA/PRECAST PIER INTERSECTION
SCALE 1 : 10 SECTION

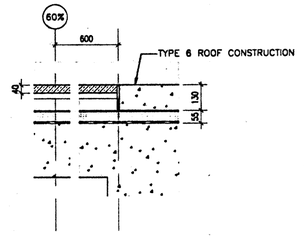

2 PLAZA @ BLUESTONE–CONC. EDGE
SCALE 1 : 10 SECTION

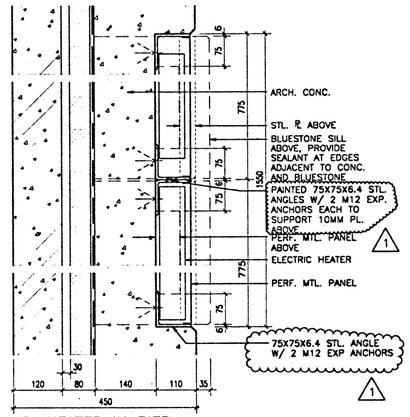

1 HEATER IN PIER
SCALE 1 : 5 PLAN

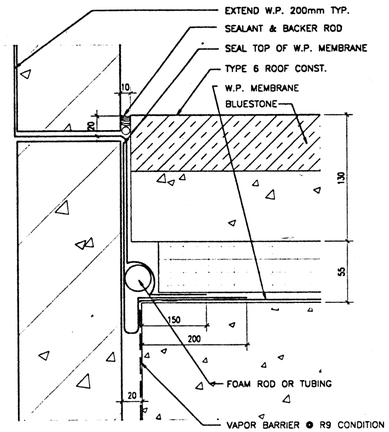

10 WATERPROOFING OF OPEN JT.
SCALE 1 : 2 @ ENTRY PLAZA & NORTH TERRACE

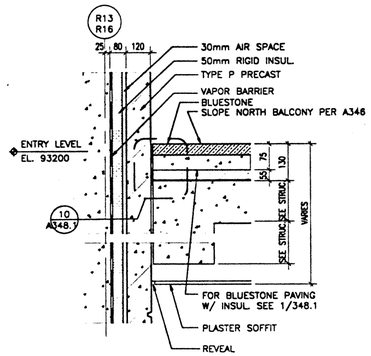

9 NORTH BALCONY AT R13 @ R16
SCALE 1 : 10 SECTION

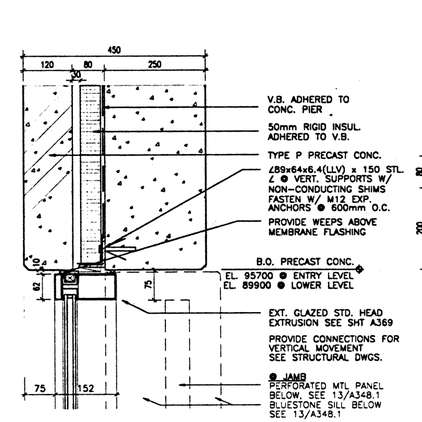

8 HEAD, JAMB @ STOREFRONT IN SPLIT PIER
SCALE 1 : 5 FOR TYPES UU & GG

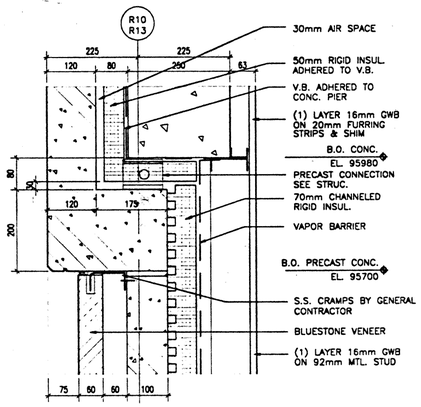

7 HEAD @ BLUESTONE RECESS
SCALE 1 : 5 SECTION

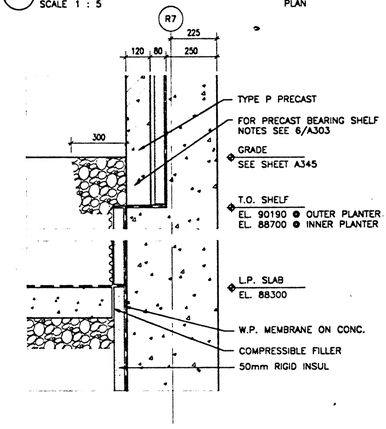

6 PRECAST BEARING @ PLANTERS
SCALE 1 : 10

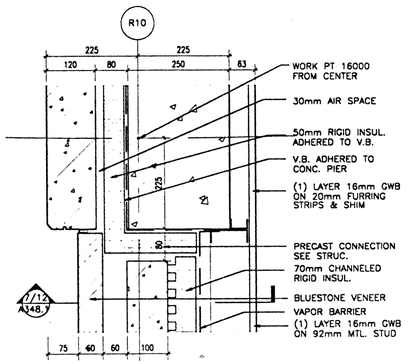

15 JAMB @ BLUESTONE RECESS
SCALE 1 : 5 PLAN DETAIL, R-13 O.H.

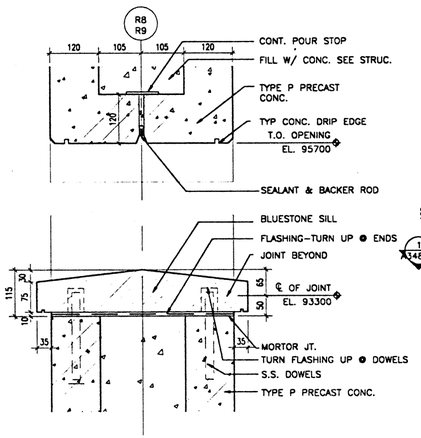

14 R8 & R9 PIER OPENING
SCALE 1 : 5 SILL & HEAD

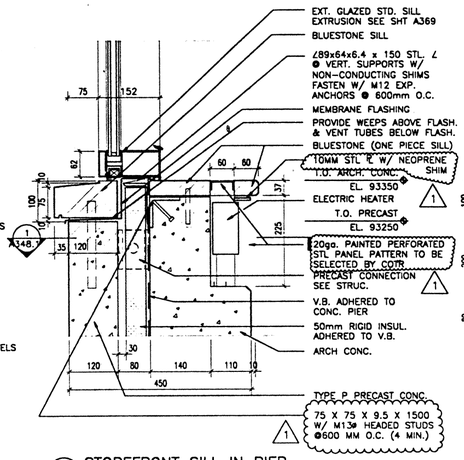

13 STOREFRONT SILL IN PIER
SCALE 1 : 5 SECTION

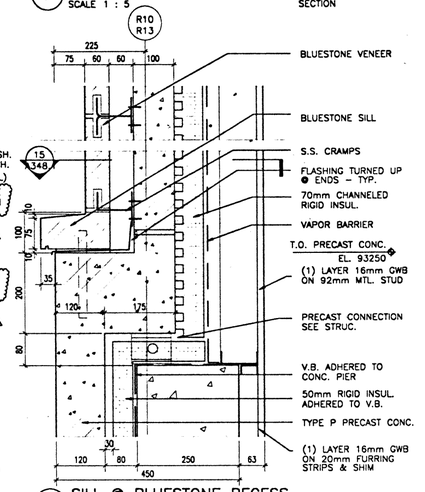

12 SILL @ BLUESTONE RECESS
SCALE 1 : 5 SECTION

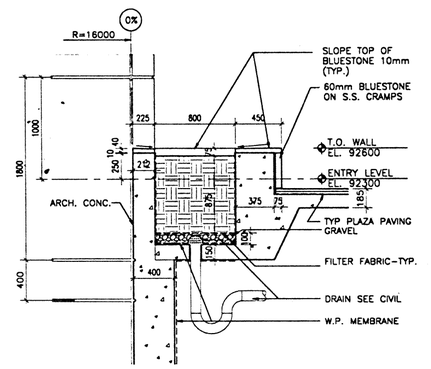

11 SECTION AT PLANTER
SCALE 1 : 20 @ ENTRY PLAZA

241A348I 10-2-96 6:26:20 pm EST

NMAI
CULTURAL RESOURCES CENTER

Architect
Polshek Metcalf Tobey and Partners Joint Venture

James Stewart Polshek and Partners
320 West 13 Street
New York, NY 10014

Metcalf Tobey and Partners
1750 Presidents Street
Reston, Virginia 22090

In Association With
Native American Design Collaborative
Louis L. Weller, President
401 Alvarado Drive S.E. – Suite D
Albuquerque, New Mexico 87108

Structural Engineer
Cagley and Associates
6141 Executive Boulevard
Rockville, Maryland 20852

MEP Engineer
Syska and Hennessy, Inc.
11 West 42 Street
New York, New York 10036

(other consultants)

Key Plan

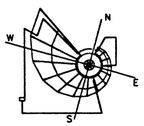

SMITHSONIAN INSTITUTION

Office of Design and Construction
955 L'Enfant Plaza, SW, Suite 3230
Washington, DC 20024

Project No.
ODC No. 912205B

Project Title
CULTURAL RESOURCES CENTER
SUITLAND, MARYLAND

Facility
NATIONAL MUSEUM OF THE AMERICAN INDIAN

Sheet Title
PLAZA AND PLANTER DETAILS

01 – AMENDMENT 1 THROUGH 8 9.30.96
Revisions Date

FINAL

Date Issued:	3.31.95	Sheet No.	A348.1
Scale:	AS NOTED		
Drawn by:	AB		
Checked by:	WK	146 OF 420	