NZP-DC: UPGRADE ESS VET HOSPITAL, QUARANTINE, & NECROPSY

NATIONAL ZOOLOGICAL PARK
3001 CONNECTICUT AVE. NW
WASHINGTON, DC 20008

OPS PROJECT NUMBER 2233105

NZP
NZP-DC: UPGRADE ESS VET HOSP, QUAR, & NECROPSY

FOR CONSTRUCTION

STAMP 1 | STAMP 2 | STAMP 3 | STAMP 4

SMITHSONIAN FACILITIES APPROVAL BLOCK

DM:
DESIGN CHIEF:
R.E.:
OPPM:
OFM&R:
OSHEM:
OPS:

THIS PROJECT IS APPROVED AS BEING IN CONFORMANCE WITH THE APPLICABLE PROVISIONS OF SMITHSONIAN INSTITUTION DIRECTIVE 410.

MICHAEL J. CARRANCHO, P.E., ASSOCIATE DIRECTOR, OEDC

DATE	SUBMISSION
05/30/25	FINAL CD

REVISION # DATE	REVISION DESCRIPTION

VICINITY MAP

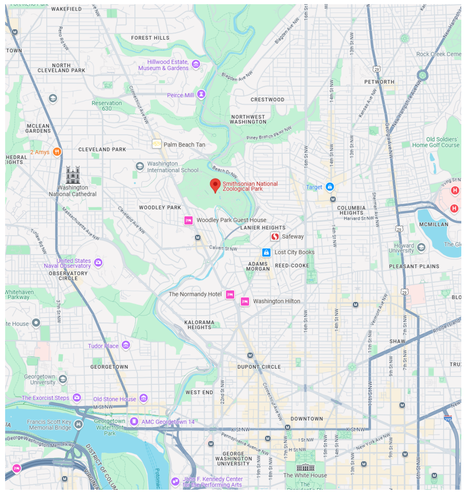

LOCATION MAP

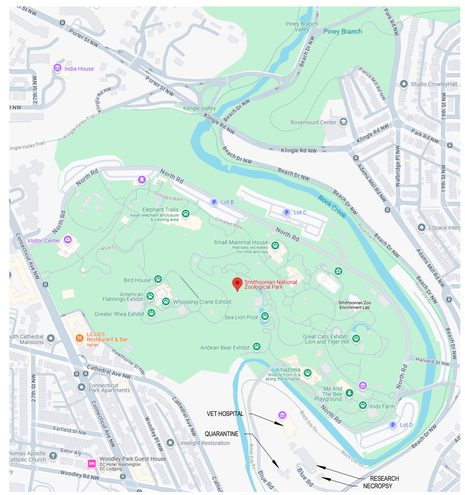

INDEX OF DRAWINGS

DRAWING NAME			DRAWING TITLE	DRAWING NAME			DRAWING TITLE
DISCIPLINE	SEQUENCE	TYPE		DISCIPLINE	SEQUENCE	TYPE	
G	001	CS	TITLE SHEET	TY	702	SH	SCHEDULES - DGP 100 AND 101 VET HOSPITAL
TY	001	SH	SECURITY REFERENCE SHEET	TY	703	SH	SCHEDULES - DGP 200 NECROPSY AND DGP 300 QUARANTINE
TY	100	SP	SITE PLAN				
TYD	101	FP	VETERINARY HOSPITAL - FLOOR PLAN - DEMO - LEVEL 1				
TYD	102	FP	VETERINARY HOSPITAL - FLOOR PLAN - DEMO - LEVEL 2				
TYD	103	FP	NECROPSY BUILDING - FLOOR PLAN - DEMO - LEVEL 1 AND ROOF				
TYD	104	FP	QUARANTINE BUILDING - FLOOR PLAN - DEMO - LEVEL 1				
TYD	105	FP	QUARANTINE BUILDING - FLOOR PLAN - DEMO - ROOF				
TY	101	FP	VETERINARY HOSPITAL - FLOOR PLAN - LEVEL 1				
TY	102	FP	VETERINARY HOSPITAL - FLOOR PLAN - LEVEL 2				
TY	103	FP	NECROPSY BUILDING - FLOOR PLAN - LEVEL 1 AND ROOF				
TY	104	FP	QUARANTINE BUILDING - FLOOR PLAN - LEVEL 1				
TY	105	FP	QUARANTINE BUILDING - FLOOR PLAN - ROOF				
TY	106	FP	RESEARCH BUILDING - FLOOR PLAN - BASEMENT				
TY	201	EL	ELEVATIONS				
TY	401	EP	ENLARGED PLANS				
TY	402	EP	ENLARGED PLANS				
TY	501	DT	DOOR DETAILS				
TY	502	DT	DOOR DETAILS				
TY	511	DT	CAMERA DETAILS				
TY	512	DT	CAMERA DETAILS				
TY	520	DT	PANEL DETAILS				
TY	521	DT	RACK DETAILS				
TY	531	DT	IDS DETAILS				
TY	532	DT	IDS DETAILS				
TY	601	DG	SECURITY SYSTEM DIAGRAM				
TY	701	SH	SCHEDULES - DOOR, CAMERA, AND NETWORK SWITCH				

Smithsonian Institution
Smithsonian Facilities
600 Maryland Avenue S.W. Suite 5001
Washington, DC 20024-2520

BUILDING NAME	NZP
ADDRESS	3001 CONNECTICUT AVE. NW WASHINGTON, DC 20008
PROJECT TITLE	NZP–DC: UPGRADE ESS VET HOSP, QUAR, & NECROPSY
OFEO PROJECT NUMBER	
A/E PROJECT NUMBER	12621037
DRAWING TITLE	TITLE SHEET
WORKING STAFF	MO (DESIGNED BY) / SK (DRAWN BY) / DB (CHECKED BY)
SHEET NO.	1 OF 29
	G 001 CS (DISCIPLINE / TYPE / SEQUENCE / DRAWING TYPE)

6/4/2025 7:12:10 AM
G 001CS BY Approver 05/30/25 FINAL CD

GENERAL NOTES

1. THE SCOPE OF THIS PROJECT INCLUDES DESIGNING AND PROVIDING A NEW COMPLETELY SUPERVISED, ELECTRONIC SECURITY SYSTEM (ESS) CONSISTING OF ACCESS CONTROL, INTRUSION DETECTION, VIDEO, AND INTERCOMMUNICATION SYSTEMS AS SHOWN ON THE DRAWINGS AND DESCRIBED WITHIN THE ACCOMPANYING SPECIFICATIONS FOR THE FACILITY IDENTIFIED. THE SYSTEM IS AN EXTENSION OF THE OWNER'S EXISTING ESS.
2. PERFORM ALL WORK NECESSARY TO CARRY OUT THE INTENT OF THE CONTRACT DOCUMENTS AND PROVIDE COMPLETE SYSTEMS EVEN THOUGH EACH ITEM IS NOT SPECIFICALLY MENTIONED OR DESCRIBED.
3. THE TERM "CONTRACT DOCUMENTS" MEANS THE SPECIFICATIONS, DRAWINGS, ADDENDUMS, SKETCHES, AND OTHER DOCUMENTATION THAT DEFINE THE WORK.
4. THE TERM "PROVIDE" MEANS FURNISH AND INSTALL, COMPLETE AND READY FOR USE.
5. THE TERM "OWNER" MEANS SMITHSONIAN INSTITUTION OR ITS DESIGNATED REPRESENTATIVE OR AGENT
6. THE TERM "CONTRACTOR" OR "GENERAL CONTRACTOR" MEANS THE PRIME CONTRACTOR RESPONSIBLE FOR ALL WORK DEFINED IN THE CONSTRUCTION DOCUMENTS.
7. THE TERM "ELECTRICAL CONTRACTOR" MEANS A LICENSED AND QUALIFIED SUBCONTRACTOR PERFORMING WORK FOR THE CONTRACTOR.
8. THE TERM "SECURITY CONTRACTOR" MEANS AN OWNER APPROVED LICENSED AND QUALIFIED SUBCONTRACTOR PERFORMING WORK FOR THE CONTRACTOR.
9. THE TERM "EXISTING" MEANS EXISTING TO REMAIN.
10. THE TERM "NEW" MEANS CONTRACTOR TO PROVIDE NEW.
11. PROVIDE A FULLY INTEGRATED SYSTEM AS AN EXTENSION OF THE OWNER'S EXISTING SECURITY SYSTEMS.
12. COORDINATE CONSTRUCTION DOCUMENTS AND EXISTING CONDITIONS PRIOR TO COMMENCING WORK. BRING CONFLICTS TO THE OWNER'S ATTENTION IMMEDIATELY. PROCEEDING WITH WORK PRIOR TO THE OWNER ISSUING CLARIFICATION IS AT THE CONTRACTOR'S OWN RISK.
13. PROVIDE ALL LABOR, MATERIAL, EQUIPMENT, WIRE, CABLE, CONDUITS AND RACEWAYS FOR A COMPLETE INSTALLATION.
14. THE CONTRACT DOCUMENTS ARE DIAGRAMMATIC AND DEFINE THE GENERAL ARRANGEMENT.
15. PROVIDE AND MAINTAIN ALL DOCUMENTATION INCLUDING DESIGN DOCUMENTATION, AS-BUILT DOCUMENTATION, PROGRAMMING WORKSHEETS AND PROJECT COMMUNICATIONS.
16. FIELD VERIFY AND COORDINATE ALL DEVICE LOCATIONS. WHERE CONFLICTS OCCUR, COORDINATE AND VERIFY FINAL LOCATIONS WITH THE OWNER PRIOR TO INSTALLATION.
17. PAY ALL FEES AND OBTAIN ALL PERMITS AND LICENSES AS REQUIRED TO PERFORM THE WORK DEFINED IN THE SPECIFICATIONS AND AS SHOWN ON THE DRAWINGS.
18. PROVIDE NEW MATERIAL AND EQUIPMENT CONFORMING TO THE APPLICABLE STANDARDS OF UL, NEC, NEMA, ASTM, ANSI AND OTHERS AS IDENTIFIED IN THE TECHNICAL SPECIFICATIONS.
19. GUARANTEE ALL WORK FOR A MINIMUM OF ONE YEAR COMMENCING ON THE DATE OF FINAL ACCEPTANCE OF THE SYSTEM BY THE OWNER.
20. PROVIDE LABOR, TOOLS, CONTAINERS, AND SERVICES AS REQUIRED TO MAINTAIN A CLEAN AND SAFE WORK SITE. REMOVE EXCESS MATERIAL AND DEBRIS FROM THE WORK SITE. CLEAN THE WORK SITE DAILY.
21. PROVIDE INTEGRATION OF SECURITY DEVICES AND EQUIPMENT WITH BUILDING FIRE ALARM DEVICES AND EQUIPMENT TO COMPLY WITH NFPA, NEC, UL, AND LOCAL CODES AND ORDINANCES.
22. SECURE WORK IN OCCUPIED AREAS WITH BARRIERS TO NOT CREATE A SAFETY HAZARD. KEEP MATERIALS SUCH AS TOOLS, LADDERS AND INSTALLATION MATERIAL TO A MINIMUM AND ALLOW EASY PASSAGE OF BUILDING TENANTS. PROVIDE DROP CLOTHES OR OTHER WISE PROTECT BUILDING FINISHES FROM ALL CONSTRUCTION DEBRIS AND DUST. REMOVE TRASH AND DEBRIS ON A DAILY BASIS AND RESTORE AREAS TO PRE CONSTRUCTION CONDITIONS AS WORK IS COMPLETED.
23. OWNER IS VERY SENSITIVE TO VIBRATION, DUST AND NOISE. ANY WORK ACTIVITIES THAT GENERATE VIBRATION, NEED TO BE TESTED AND SCHEDULED IN ADVANCE. SHOULD ACTIVITIES EXCEED OWNERS SET LIMITS, THE OWNER HAS THE RIGHT TO STOP WORK, PROVIDE AN ALTERNATE DATE AND TIME TO COMPLETE VIBRATION GENERATING WORK.

CONDUIT AND RACEWAY NOTES

1. PROVIDE CONDUITS AND RACEWAYS FOR A COMPLETE INSTALLATION. ROUTE SECURITY WIRE AND CABLE IN CABLE TRAYS, METALLIC CONDUITS, COVERED RACEWAYS, OR CLOSED WIRE TROUGHS. J-HOOKS ARE NOT AUTHORIZED.
2. PROVIDE CONDUITS AND RACEWAYS THAT COMPLY WITH NEC REQUIREMENTS OR COMPLY WITH LOCAL CODES AND ORDINANCES. THE MOST STRINGENT REQUIREMENTS GOVERN.
3. REGARDLESS OF NEC OR LOCAL CODES AND ORDINANCES, PROVIDE CONDUIT AND RACEWAY SIZED FOR A MAXIMUM FILL OF 40%.
4. REGARDLESS OF NEC OR LOCAL CODES AND CONDUIT FILL REQUIREMENTS, THE CONDUIT MINIMUM DIAMETER IS 19mm (3/4").
5. PROVIDE COMPRESSION TYPE CONDUIT FITTINGS. SET SCREW TYPE FITTINGS ARE NOT ACCEPTABLE.
6. PROVIDE COLOR CODING OF SECURITY CONDUITS AND RACEWAYS, PERMANENTLY MARK CONDUITS AND RACEWAYS WITH A 25mm (1") BLUE BAND EVERY 3 METERS (10 FEET). BLUE BANDING COLOR TO BE BENJAMIN MOORE #791 OR APPROVED EQUIVALENT.
7. PERMANENTLY PAINT JUNCTION BOXES, DEVICE BOXES, TERMINAL CABINETS, AND WIRE THROUGH BLUE, COLOR TO BE BENJAMIN MOORE #791 OR APPROVED EQUIVALENT.
8. PAINT EXPOSED CONDUIT TO MATCH ADJACENT FINISH.
9. CONCEAL CONDUIT AND RACEWAYS TO THE GREATEST EXTENT POSSIBLE. IN AREAS WITHOUT CEILINGS, INSTALL CONDUIT AS UNOBTRUSIVELY AS POSSIBLE, AS CLOSE AS POSSIBLE TO FLOOR/ CEILING SLAB AND PARALLEL AND AT RIGHT ANGLES TO STRUCTURAL STEEL OR CONCRETE ELEMENTS. THESE DRAWINGS ARE DIAGRAMMATIC TO SHOW DESIGN INTENT ONLY. WHERE CONDUITS AND RACEWAYS CANNOT BE CONCEALED, COORDINATE WITH THE OWNER TO OBTAIN APPROVAL PRIOR TO INSTALLATION.
10. PROVIDE SEPARATE RACEWAY, CONDUITS, JUNCTION BOXES, AND ENCLOSURES FOR ALL SECURITY WIRE AND CABLE. USE OF SHARED LOW-VOLTAGE CABLE TRAY IS AUTHORIZED. DO NOT COMBINE 120VAC CONDUCTORS OR ANY POWER DISTRIBUTION CIRCUIT WITH SECURITY WIRE AND CABLE.
11. PROVIDE OWNER APPROVED SECURITY SCREWS AND FASTENERS FOR ALL SECURITY JUNCTION BOXES AND SCREW COVER ENCLOSURES.
12. PROVIDE ACCESS COVERS OR HATCHES FOR ALL SECURITY JUNCTION BOXES CONCEALED IN STRUCTURE. PROVIDE ACCESS TO JUNCTION BOXES AND EQUIPMENT ENCLOSURES LOCATED WITHIN 3 METERS (10 FEET) OF SECURITY DEVICES.
13. PROPERLY CLEAN AND SEAL PENETRATIONS IN FIRE RESISTIVE WALLS, FLOOR, CEILING, OR ROOF ASSEMBLIES TO THE FULL THICKNESS OF THE PENETRATION WITH AN APPROVED THROUGH PENETRATION FIRE STOP SYSTEM. PROVIDE FIRE STOP SYSTEM WITH A FIRE RESISTANCE THAT IS EQUAL TO OR GREATER THAN THAT OF THE PENETRATED ASSEMBLY. REFER TO ARCHITECTURAL DRAWINGS FOR LOCATIONS AND RATINGS OF FIRE RESISTIVE ASSEMBLIES.
14. CORE DRILL WITH MASONRY TYPE CORE BIT AND SLEEVED AS SPECIFIED ALL PENETRATIONS IN MASONRY WALLS AND FLOOR/CEILING SLABS. UTILIZE X-RAY OR ULTRASOUND TECHNOLOGY TO DETECT AND AVOID CONCEALED STRUCTURAL REINFORCEMENT.
15. CONTRACTOR IS RESPONSIBLE FOR AVOIDING ALL CONFLICTS WITH LIGHT FIXTURES, HVAC DIFFUSERS, GRILLS, DUCTS, CONDUIT AND OTHER PIPING OR OTHER OBSTRUCTIONS ENCOUNTERED. COORDINATE ALL WORK WITH EXISTING FIELD CONDITIONS. PROMPTLY NOTIFY OWNER PRIOR TO INITIATING WORK IF ANY MOUNTING LOCATIONS ARE OBSTRUCTED AND/OR IF ANY MOUNTING CONFLICTS OR PROBLEMS ARE DISCOVERED.
16. EXCAVATE WITH EXTREME CARE. TAKE ALL REASONABLE ACTIONS TO PROPERLY PROTECT; SUPPORT AND BACKFILL UNDERGROUND UTILITY LINES. IMMEDIATELY NOTIFY THE UTILITY IF AN UNDERGROUND UTILITY LINE IS DAMAGED. IF DAMAGE CREATES AN EMERGENCY, TAKE IMMEDIATE STEPS TO SAFEGUARD LIFE, HEALTH AND PROPERTY.

WIRE & CABLE NOTES

1. PROVIDE ALL WIRE AND CABLE FOR A COMPLETE AND FUNCTIONAL SECURITY SYSTEM.
2. PROVIDE WIRE AND CABLE THAT COMPLY WITH NEC AND UL REQUIREMENTS OR COMPLY WITH LOCAL CODES AND ORDINANCES. THE MOST STRINGENT REQUIREMENTS GOVERN.
3. PROVIDE WIRE AND CABLE CONDUCTORS FOR DATA CIRCUITS, CONTROL CIRCUITS AND COMMUNICATIONS WIRING #22 AWG MINIMUM.
4. PROVIDE WIRE AND CABLE CONDUCTORS FOR LOW VOLTAGE POWER DISTRIBUTION AND CONTROL CIRCUIT WIRING #18 AWG MINIMUM. UP SIZE CONDUCTORS AS REQUIRED TO PROVIDE A VOLTAGE DROP LESS THAN 10% UNLESS OTHERWISE NOTED.
5. PROVIDE MANUFACTURER'S INTERNAL INTERCONNECT WIRING UL APPROVED AND SIZED IN ACCORDANCE WITH THE MANUFACTURER'S MINIMUM REQUIREMENTS.
6. PROVIDE SHIELDED CABLE FOR ALL LOW SPEED SERIAL DATA CIRCUITS, CONTROL CIRCUITS, AND COMMUNICATIONS WIRING.
7. PROVIDE UTP CAT 6 CABLE FOR ALL HIGH SPEED DATA CIRCUITS (ETHERNET).
8. GROUND LOOPS ARE NOT PERMITTED. GROUND SHIELD DRAIN WIRES TO VERIFIED EARTH GROUND TERMINAL LUGS AT THE CONTROL CABINET OR ORIGINATING EQUIPMENT. INSULATE SHIELDS AND DRAIN WIRES AT THE DEVICE OR REMOTE TERMINATION POINT USING UL APPROVED INSULATORS. THE USE OF AC POWER NEUTRAL CONDUCTORS FOR GROUND CONNECTIONS IS UNACCEPTABLE.
9. PROVIDE UNSHIELDED TWISTED PAIR CABLE ASSEMBLIES FOR ALL DC LOW VOLTAGE POWER DISTRIBUTION AND CONTROL CIRCUITS.
10. PROVIDE TWISTED SHIELDED PAIR CABLE ASSEMBLIES FOR ALL AC LOW VOLTAGE POWER DISTRIBUTION.

DEMO NOTES

1. PERFORM A "FUNCTIONAL CHECK" OF ALL ESS EQUIPMENT PRIOR TO INITIATING ANY DEMOLITION. COMPILE "FUNCTIONAL CHECK" RESULTS AND DELIVER TO THE OWNER.
2. THE TERM "DEMO" MEANS DISCONNECT AND REMOVED BACK TO SOURCE, STOP REMOVAL WHERE DAMAGE WOULD OCCUR IF FURTHER REMOVAL OCCURRED. CUT CONDUIT OFF AND REMOVE WIRE CONDUCTORS UNDER THESE CONDITIONS.
3. REMOVE SECURITY EQUIPMENT, COMPONENTS, AND DEVICES SCHEDULED FOR DEMOLITION IN A MANNER TO PRESERVE THE APPEARANCE AND OPERABILITY TO THE EXTENT POSSIBLE.
4. INVENTORY EQUIPMENT REMOVED DURING DEMOLITION AND TURN OVER TO OWNER.
5. MAINTAIN EXISTING SECURITY DEVICES OPERATIONALLY AS LONG AS POSSIBLE. COORDINATE SECURITY SYSTEM OUTAGE TIME WITH OWNER AND BUILDING SECURITY.
6. IF SYSTEM OUTAGE EXTENDS BEYOND NORMAL BUSINESS HOURS, THE CONTRACTOR INCURS THE COST FOR UTILIZING THE OWNERS UNIFORMED GUARD SERVICE TO PROVIDE ADDITIONAL SECURITY.

ELEVATION AND DETAIL CALLOUT

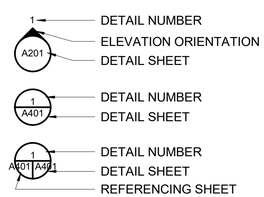

CAMERA TYPE LEGEND

NUMBER
TYPE
MOUNT

TYPE

2MP 2 MEGAPIXEL CAMERA
4MP 4 MEGAPIXEL CAMERA
8MP 8 MEGAPIXEL CAMERA
14MP 14 MEGAPIXEL CAMERA

MOUNT

CS CEILING SURFACE
WS WALL SURFACE
CM CORNER MOUNT

SYMBOL LEGEND

SYMBOL	DEVICE DESCRIPTION
	NEW DEVICE LINE TYPE
	EXISTING DEVICE LINE TYPE
	DEMO DEVICE LINE TYPE
FS-#	FIBER SWITCH, # = PORTS
NS-#	NETWORK SWITCH, # = PORTS
	POWER SUPPLY
#	CARD READER, P = PROXIMITY
	ARM/DISARM READER
ULTR	DATA GATHERING PANEL - ISTAR ULTR AND POWER SUPPLY
EDGE X	DATA GATHERING PANEL - ISTAR EDGE G2 AND POWER SUPPLY, X = UNIT NUMBER
WCH	WALL-MOUNTABLE CONNECTOR HOUSING
FPP	FIBER PATCH PANEL
I/O	INPUT/OUTPUT ENCLOSURE
RM	READER MODULE
#	MONITOR, # = SIZE
TR-#	TRANSCODER, # = NUMBER
UPS	UNINTERRUPTIBLE POWER SUPPLY
NVR	NETWORK VIDEO RECORDER
CAB	STORAGE CABINET
#	DOOR CONTACT, R = RECESSED, S = SURFACE, HS = HIGH SECURITY, OH = OVERHEAD
REX	REQUEST TO EXIT PIR
#	ELECTRIFIED LOCKSET, R=WITH INTEGRATED REX, S=ELECTRIC STRIKE
	LOCAL SOUNDER
	VIDEO INTERCOM MASTER
	VIDEO INTERCOM SUBSTATION
	FIXED DOME CAMERA
	DUAL-LENS CAMERA - 90 DEGREES
	DUAL-LENS CAMERA - 180 DEGREES
	MULTI-LENS CAMERA
	PANORAMIC CAMERA
	360 DEGREE MOTION DETECTOR
	DIRECTIONAL MOTION DETECTOR
	GLASS BREAK DETECTOR
#	SHEET KEY NOTE
#	DETAIL KEY NOTE
	CONTINUATION SYMBOL
	WALL MOUNTED SWING-OUT RACK

ABBREVIATIONS

AC	ALTERNATING CURRENT
ACS	ACCESS CONTROL SYSTEM
ADA	AMERICANS WITH DISABILITIES ACT
AFF	ABOVE FINISHED FLOOR
ANSI	AMERICAN NATIONAL STANDARDS INSTITUTE
ASTM	ASTM INTERNATIONAL
C	CONDUIT
CAT	CATEGORY
CM	CEILING MOUNTED
COTR	CONTRACTING OFFICER'S TECHNICAL REPRESENTATIVE
CT	CABLE TRAY
DC	DIRECT CURRENT
DE	DELAYED EGRESS
DPDT	DOUBLE POLE DOUBLE THROW
DVR	DIGITAL VIDEO RECORDER
EMI	ELECTRICAL MAGNETIC INTERFERENCE
EMT	ELECTRICAL METALLIC TUBING
ESS	ELECTRONIC SECURITY SYSTEM
FO	FIBER OPTIC
HVAC	HEATING, VENTILATION, AND AIR CONDITIONING
IDS	INTRUSION DETECTION SYSTEM
IMC	INTERMEDIATE METAL CONDUIT
IMT	INTERMEDIATE METALLIC TUBING
LAN	LOCAL AREA NETWORK
LB	L-TYPE CONDUIT BODY
MAX	MAXIMUM
MIN	MINIMUM
MISC	MISCELLANEOUS
MM	MULTIMODE
MTD	MOUNTED
NEC	NATIONAL ELECTRICAL CODE
NEMA	NATIONAL ELECTRICAL MANUFACTURERS ASSOCIATION
NFPA	NATIONAL FIRE PROTECTION ASSOCIATION
NPT	NATIONAL PIPE THREAD
NTS	NOT TO SCALE
NVR	NETWORK VIDEO RECORDER
OC	ON CENTER
OSP	OUTSIDE PLANT
PC	PERSONAL COMPUTER
POE	POWER OVER ETHERNET
PP	PATCH PANEL
PR	PAIR
RM	ROOM
RMU	RACK MOUNTING UNIT (1.75")
SCC	SECURITY COMMAND/CONTROL CENTER
SER	SECURITY EQUIPMENT ROOM
SFP	SMALL FORM-FACTOR PLUGGABLE
SI	SMITHSONIAN INSTITUTION
SM	SINGLEMODE
SMS	SECURITY MANAGEMENT SYSTEM
SOC	SECURITY OPERATIONS CENTER
TBD	TO BE DETERMINED
TGB	TELECOMMUNICATIONS GROUNDING BUSBAR
TMGB	TELECOMMUNICATIONS MAIN GROUNDING BUSBAR
TR	TELECOMMUNICATIONS ROOM
TVSS	TRANSIENT VOLTAGE SURGE SUPPRESSOR
TYP	TYPICAL
UL	UNDERWRITERS LABORATORIES
UON	UNLESS OTHERWISE NOTED
UPS	UNINTERRUPTED POWER SUPPLY
UTP	UNSHIELDED TWISTED PAIR
VAC	VOLTS ALTERNATING CURRENT
VASS	VIDEO ASSESSMENT AND SURVEILANCE SYSTEM
VDC	VOLTS DIRECT CURRENT
VMS	VIDEO MANAGEMENT SYSTEM
VP	VANDAL PROOF
WM	WALL MOUNTED

CABLE LEGEND

TYPE	WIRE SIZE	# OF CONDUCTORS	DESCRIPTION	BELDEN OR EQUAL	SIGNAL
A	22AWG	6	SHIELDED	9942	CARD READER
B	18AWG	2	SHIELDED	8461	POWER
C	22AWG	2	TWISTED SHIELDED PAIR	8442	CONTACT
D	24AWG	4	TWISTED SHIELDED PAIR	9842	CONTROL (RS-485, 4-WIRE)
E	24AWG	2	TWISTED SHIELDED PAIR	9841	CONTROL (RS-485)
F	22AWG	4	TWISTED SHIELDED PAIR	8729	DEVICE WIRING
G	UTP	8	CAT6	7852A	VIDEO, COMMUNICATION
H	MM	6	FIBER OPTIC (50 MICRON)	FD4H0065F	COMMUNICATION
I	SM/MM	12SM/24MM	FIBER OPTIC HYBRID (OS2/OM4)	FIEDH24AJ	COMMUNICATION
J	16AWG	2	SHIELDED	6200UH	POWER

NZP

NZP-DC: UPGRADE ESS VET HOSP, QUAR, & NECROPSY

FOR CONSTRUCTION

GHD Inc.
14501 George Carter Way Ste 102
Chantilly Virginia USA

GRAPHIC SCALE(S)

DATE	SUBMISSION
05/30/25	FINAL CD

REVISION # DATE	REVISION DESCRIPTION

Smithsonian Institution
Smithsonian Facilities
600 Maryland Avenue S.W. Suite 5001
Washington, DC 20024-2520

BUILDING NAME	NZP
ADDRESS	3001 CONNECTICUT AVE. NW WASHINGTON, DC 20008
PROJECT TITLE	NZP-DC: UPGRADE ESS VET HOSP, QUAR, & NECROPSY
OFEO PROJECT NUMBER	
A/E PROJECT NUMBER	12621037
DRAWING TITLE	SECURITY REFERENCE SHEET
WORKING STAFF	MO (DESIGNED BY) SK (DRAWN BY) DB (CHECKED BY)
SHEET NO.	2 OF 29
	TY 001 SH (DISCIPLINE TYPE SEQUENCE DRAWING TYPE)

6/4/2025 7:12:10 AM
TY001SH BY Approver 05/30/25 FINAL CD

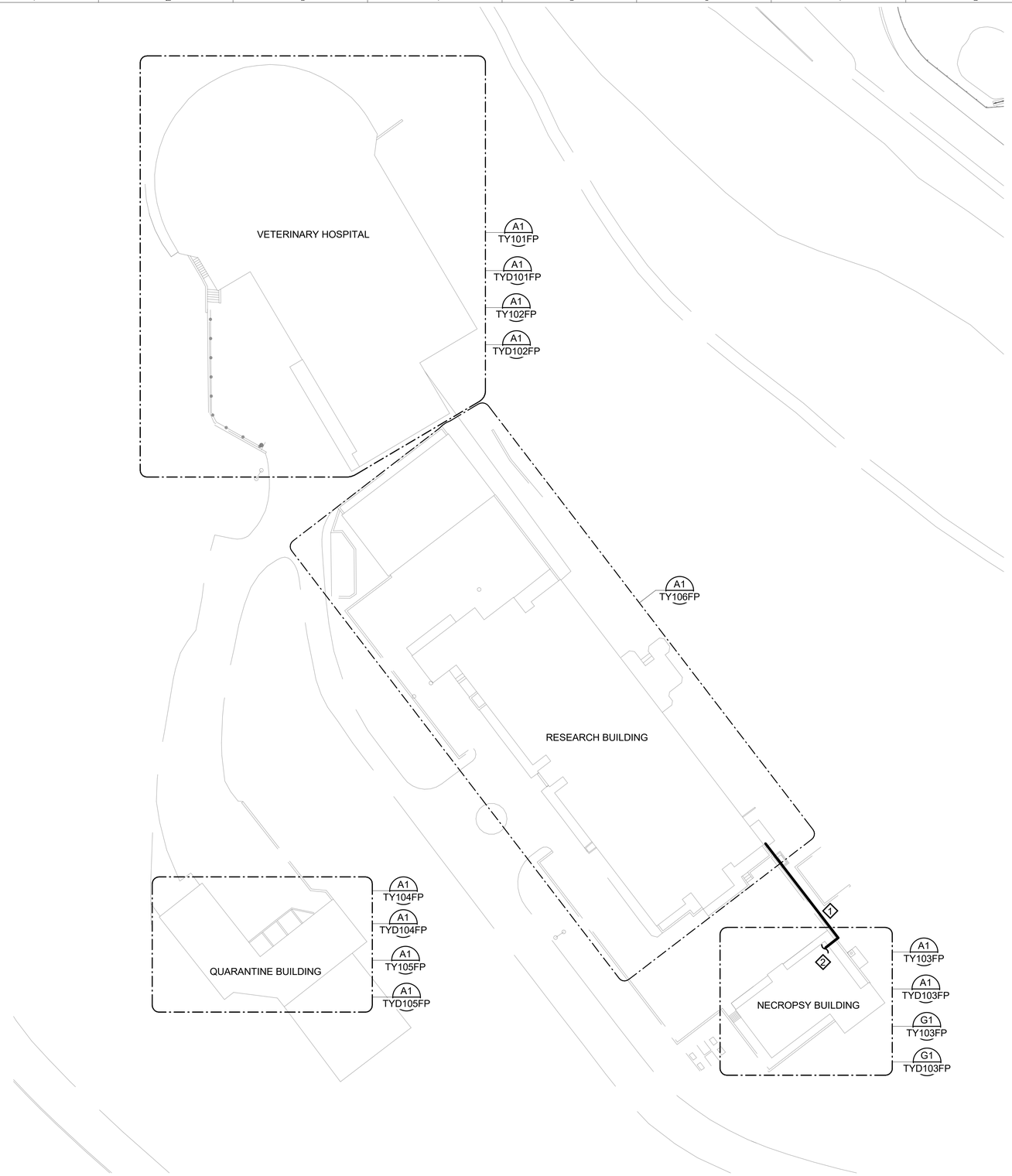

A1
TY100SP

SITE PLAN

SCALE = 1" = 30'-0"

KEY NOTES

1. ROUTE CONDUIT ALONG CONCRETE WALL.
2. FIELD ROUTE CONDUIT AS NECESSARY TO FIBER PATCH PANEL LOCATION.

NZP

NZP-DC: UPGRADE ESS VET HOSP, QUAR, & NECROPSY

FOR CONSTRUCTION

GHD Inc.
14501 George Carter Way Ste 102
Chantilly Virginia USA

STAMP

KEY PLAN

0 30' 60'
1"=30'-0"
GRAPHIC SCALE(S)

DATE	SUBMISSION
05/30/25	FINAL CD

REVISION # DATE	REVISION DESCRIPTION

Smithsonian Institution
Smithsonian Facilities
600 Maryland Avenue S.W. Suite 5001
Washington, DC 20024-2520

BUILDING NAME	NZP
ADDRESS	3001 CONNECTICUT AVE. NW WASHINGTON, DC 20008
PROJECT TITLE	NZP-DC: UPGRADE ESS VET HOSP, QUAR, & NECROPSY
OFEO PROJECT NUMBER	
A/E PROJECT NUMBER	12621037
DRAWING TITLE	SITE PLAN
WORKING STAFF	MO (DESIGNED BY) SK (DRAWN BY) DB (CHECKED BY)
SHEET NO.	3 OF 29
	TY 100 SP (DISCIPLINE TYPE SEQUENCE DRAWING TYPE)

6/4/2025 7:12:12 AM
TY100SP BY Approver: 05/30/25 FINAL CD

KEY NOTES

1. REMOVE FIBER WALL-MOUNTABLE CONNECTOR HOUSING. RETAIN 6-STRAND FIBER PATCH PANEL.

A1
TYD101FP

VETERINARY HOSPITAL LEVEL 1

SCALE = 1/8" = 1'-0"

6/4/2025 7:12:10 AM
TYD101FP BY Approver 05/30/25 FINAL CD

NZP

NZP-DC: UPGRADE ESS VET HOSP, QUAR, & NECROPSY

FOR CONSTRUCTION

GHD Inc.
14501 George Carter Way Ste 102
Chantilly Virginia USA

STAMP

KEY PLAN

0 4' 8' 16'
1/8"=1'-0"
GRAPHIC SCALE(S)

DATE	SUBMISSION
05/30/25	FINAL CD

REVISION # DATE	REVISION DESCRIPTION

Smithsonian Institution
Smithsonian Facilities
600 Maryland Avenue S.W. Suite 5001
Washington, DC 20024-2520

BUILDING NAME	NZP
ADDRESS	3001 CONNECTICUT AVE. NW WASHINGTON, DC 20008
PROJECT TITLE	NZP–DC: UPGRADE ESS VET HOSP, QUAR, & NECROPSY
OFEO PROJECT NUMBER	
A/E PROJECT NUMBER	12621037
DRAWING TITLE	VETERINARY HOSPITAL – FLOOR PLAN – DEMO – LEVEL 1

WORKING STAFF		
MO	SK	DB
DESIGNED BY	DRAWN BY	CHECKED BY

SHEET NO. 4 OF 29

TYD	101	FP
DISCIPLINE	TYPE SEQUENCE	DRAWING TYPE

KEY NOTES

1. REMOVE FIBER WALL-MOUNTABLE CONNECTOR HOUSING. RETAIN 6-STRAND FIBER PATCH PANEL.

A1
TYD102FP

VETERINARY HOSPITAL LEVEL 2

SCALE = 1/8" = 1'-0"

6/4/2025 7:12:11 AM
TYD102FP BY Approver 05/30/25 FINAL CD

NZP

NZP-DC: UPGRADE ESS VET HOSP, QUAR, & NECROPSY

FOR CONSTRUCTION

GHD Inc.
14501 George Carter Way Ste 102
Chantilly Virginia USA

KEY PLAN

0 4' 8' 16'
1/8"=1'-0"
GRAPHIC SCALE(S)

DATE	SUBMISSION
05/30/25	FINAL CD

REVISION # DATE	REVISION DESCRIPTION

Smithsonian Institution
Smithsonian Facilities
600 Maryland Avenue S.W. Suite 5001
Washington, DC 20024-2520

BUILDING NAME	NZP
ADDRESS	3001 CONNECTICUT AVE. NW WASHINGTON, DC 20008
PROJECT TITLE	NZP-DC: UPGRADE ESS VET HOSP, QUAR, & NECROPSY
OFEO PROJECT NUMBER	
A/E PROJECT NUMBER	12621037
DRAWING TITLE	VETERINARY HOSPITAL – FLOOR PLAN – DEMO – LEVEL 2

WORKING STAFF	MO	SK	DB
	DESIGNED BY	DRAWN BY	CHECKED BY

SHEET NO.	DISCIPLINE	TYPE	SEQUENCE	DRAWING TYPE
5 OF 29	T	Y D	1 0 2	F P

SHEET NOTES

1. NO DEMO WORK ON THIS SHEET.

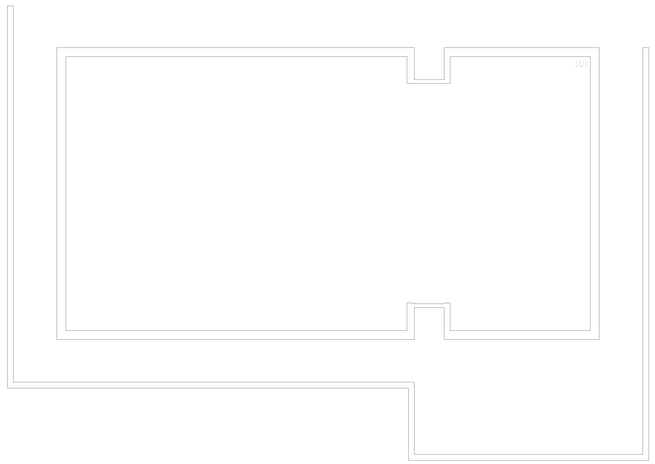

G1
TYD103FP

NECROPSY BUILDING ROOF
SCALE = 1/8" = 1'-0"

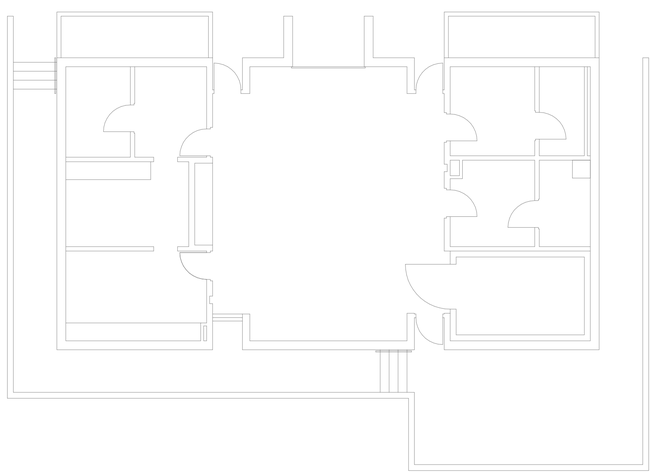

A1
TYD103FP

NECROPSY BUILDING LEVEL 1
SCALE = 1/8" = 1'-0"

NZP

NZP-DC: UPGRADE ESS VET HOSP, QUAR, & NECROPSY

FOR CONSTRUCTION

GHD Inc.
14501 George Carter Way Ste 102
Chantilly Virginia USA

STAMP

KEY PLAN

0 4' 8' 16'
1/8"=1'-0"
GRAPHIC SCALE(S)

DATE	SUBMISSION
05/30/25	FINAL CD

REVISION # DATE	REVISION DESCRIPTION

Smithsonian Institution
Smithsonian Facilities
600 Maryland Avenue S.W. Suite 5001
Washington, DC 20024-2520

BUILDING NAME	NZP
ADDRESS	3001 CONNECTICUT AVE. NW WASHINGTON, DC 20008
PROJECT TITLE	NZP-DC: UPGRADE ESS VET HOSP, QUAR, & NECROPSY
OFEO PROJECT NUMBER	
A/E PROJECT NUMBER	12621037
DRAWING TITLE	NECROPSY BUILDING – FLOOR PLAN – DEMO – LEVEL 1 AND ROOF
WORKING STAFF	MO (DESIGNED BY) / SK (DRAWN BY) / DB (CHECKED BY)
SHEET NO.	6 OF 29
	TYD 103 FP (DISCIPLINE / TYPE / SEQUENCE / DRAWING TYPE)

6/4/2025 7:12:11 AM
TYD103FP BY Approver 05/30/25 FINAL CD

SHEET NOTES

1. NO DEMO WORK ON THIS SHEET.

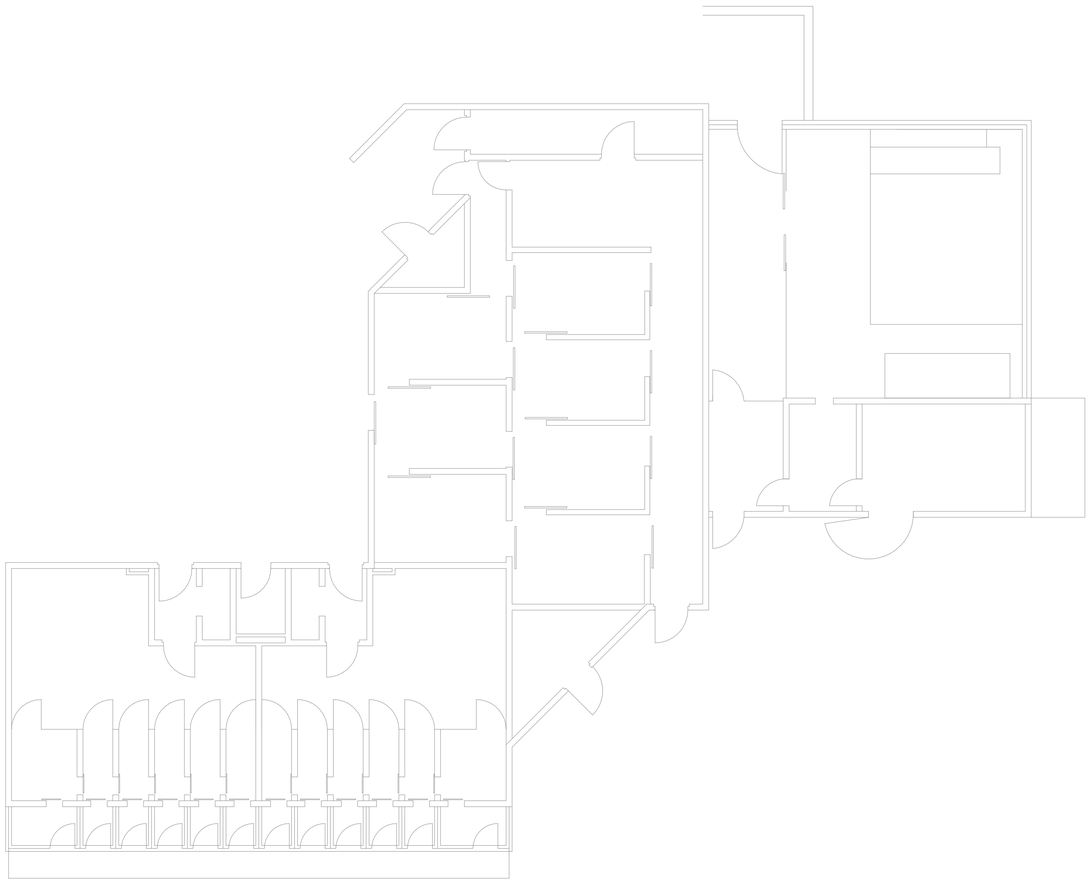

A1
TYD104FP

QUARANTINE BUILDING LEVEL 1

SCALE = 1/8" = 1'-0"

NZP

NZP-DC: UPGRADE ESS VET HOSP, QUAR, & NECROPSY

FOR CONSTRUCTION

GHD Inc.
14501 George Carter Way Ste 102
Chantilly Virginia USA

STAMP

KEY PLAN

0 4' 8' 16'
1/8"=1'-0"
GRAPHIC SCALE(S)

DATE	SUBMISSION
05/30/25	FINAL CD

REVISION # DATE	REVISION DESCRIPTION

Smithsonian Institution
Smithsonian Facilities
600 Maryland Avenue S.W. Suite 5001
Washington, DC 20024-2520

BUILDING NAME	NZP
ADDRESS	3001 CONNECTICUT AVE. NW WASHINGTON, DC 20008
PROJECT TITLE	NZP-DC: UPGRADE ESS VET HOSP, QUAR, & NECROPSY
OFEO PROJECT NUMBER	
A/E PROJECT NUMBER	12621037
DRAWING TITLE	QUARANTINE BUILDING – FLOOR PLAN – DEMO – LEVEL 1
WORKING STAFF	MO (DESIGNED BY) SK (DRAWN BY) DB (CHECKED BY)
SHEET NO.	7 OF 29
	TYD 104 FP (DISCIPLINE TYPE SEQUENCE DRAWING TYPE)

6/4/2025 7:12:11 AM
TYD104FP BY Approver 05/30/25 FINAL CD

SHEET NOTES

1. NO DEMO WORK ON THIS SHEET.

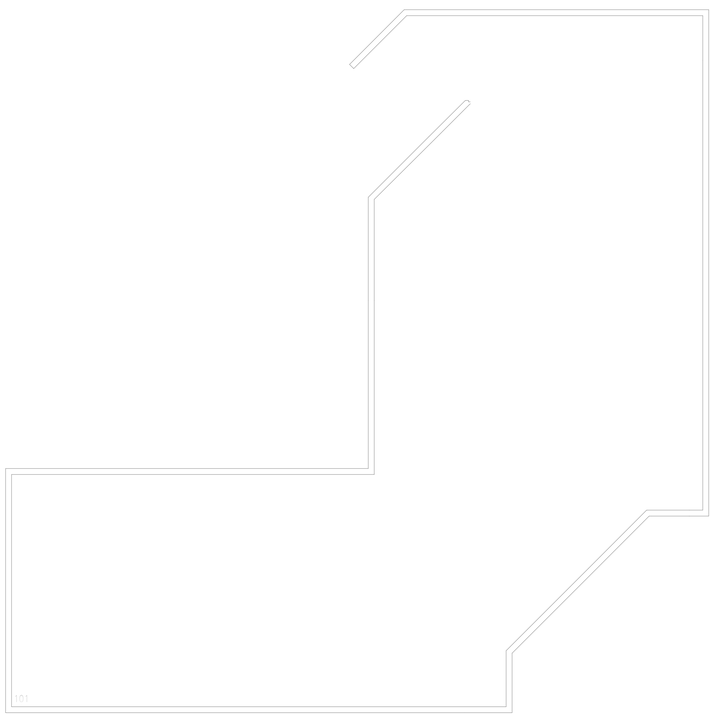

A1
TYD105FP

QUARANTINE BUILDING ROOF
SCALE = 1/8" = 1'-0"

6/4/2025 7:12:12 AM
TYD105FP BY Approver 05/30/25 FINAL CD

NZP

NZP-DC: UPGRADE ESS VET HOSP, QUAR, & NECROPSY

FOR CONSTRUCTION

GHD Inc.
14501 George Carter Way Ste 102
Chantilly Virginia USA

STAMP

KEY PLAN

0 4' 8' 16'
1/8"=1'-0"
GRAPHIC SCALE(S)

DATE	SUBMISSION
05/30/25	FINAL CD

REVISION # DATE	REVISION DESCRIPTION

Smithsonian Institution
Smithsonian Facilities
600 Maryland Avenue S.W. Suite 5001
Washington, DC 20024-2520

BUILDING NAME	NZP
ADDRESS	3001 CONNECTICUT AVE. NW WASHINGTON, DC 20008
PROJECT TITLE	NZP-DC: UPGRADE ESS VET HOSP, QUAR, & NECROPSY
OFEO PROJECT NUMBER	
A/E PROJECT NUMBER	12621037
DRAWING TITLE	QUARANTINE BUILDING – FLOOR PLAN – DEMO – ROOF
WORKING STAFF	MO (DESIGNED BY) / SK (DRAWN BY) / DB (CHECKED BY)
SHEET NO.	8 OF 29
	TYD 105 FP (DISCIPLINE / TYPE / SEQUENCE / DRAWING TYPE)

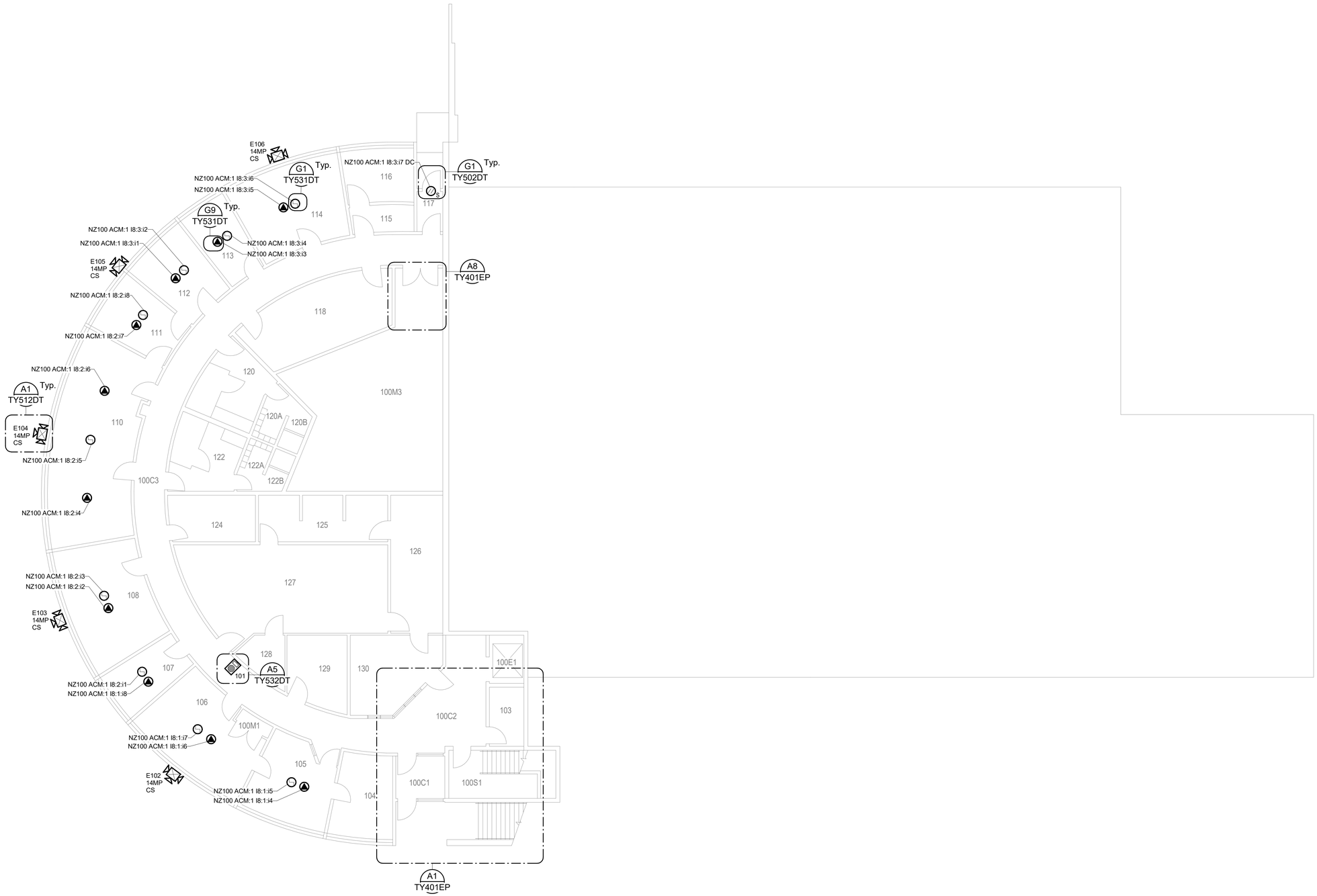

A1
TY101FP

VETERINARY HOSPITAL LEVEL 1

SCALE = 1/8" = 1'-0"

6/4/2025 7:12:13 AM
TY101FP BY Approver 05/30/25 FINAL CD

NZP

NZP-DC: UPGRADE ESS VET HOSP, QUAR, & NECROPSY

FOR CONSTRUCTION

GHD Inc.
14501 George Carter Way Ste 102
Chantilly Virginia USA

STAMP

KEY PLAN

0 4' 8' 16'
1/8"=1'-0"
GRAPHIC SCALE(S)

DATE	SUBMISSION
05/30/25	FINAL CD

REVISION # DATE	REVISION DESCRIPTION

Smithsonian Institution
Smithsonian Facilities
600 Maryland Avenue S.W. Suite 5001
Washington, DC 20024-2520

BUILDING NAME	NZP
ADDRESS	3001 CONNECTICUT AVE. NW WASHINGTON, DC 20008
PROJECT TITLE	NZP-DC: UPGRADE ESS VET HOSP, QUAR, & NECROPSY
OFEO PROJECT NUMBER	
A/E PROJECT NUMBER	12621037
DRAWING TITLE	VETERINARY HOSPITAL – FLOOR PLAN – LEVEL 1
WORKING STAFF	MO (DESIGNED BY) / SK (DRAWN BY) / DB (CHECKED BY)
SHEET NO.	9 OF 29
DISCIPLINE / TYPE / SEQUENCE / DRAWING TYPE	TY 101 FP

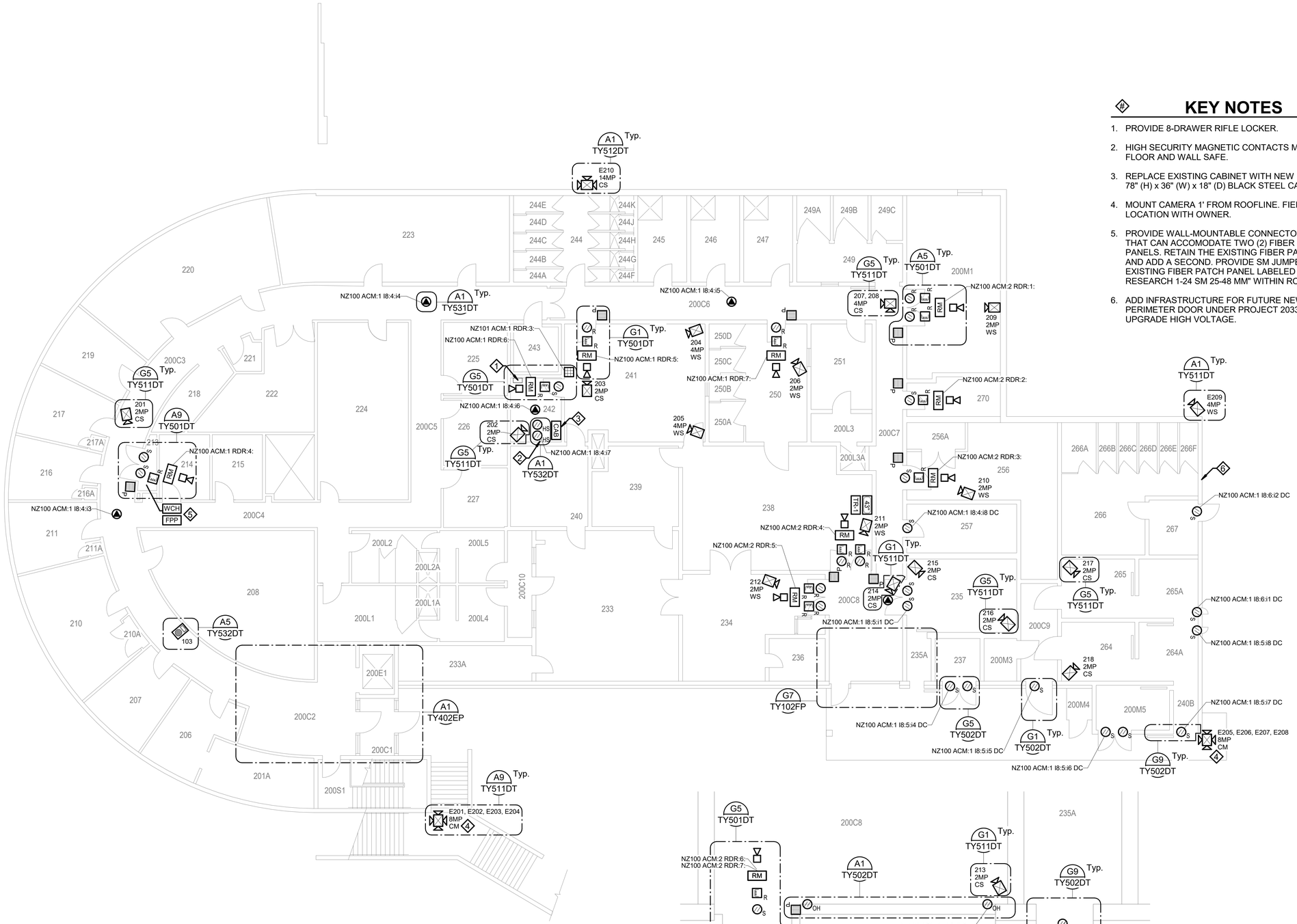

A1 TY102FP — VETERINARY HOSPITAL LEVEL 2

SCALE = 1/8" = 1'-0"

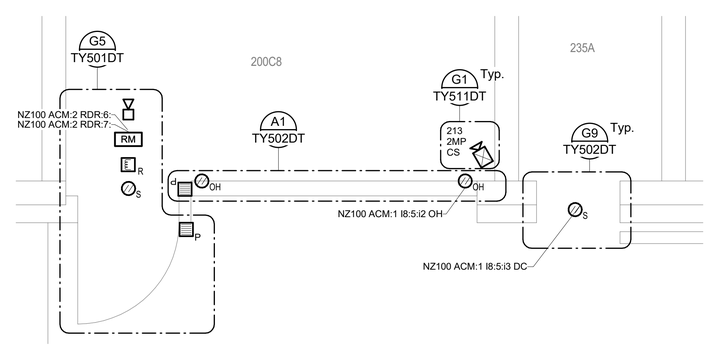

G7 TY102FP TY102FP — VETERINARY HOSPITAL ENLARGED PLAN

SCALE = 1/2" = 1'-0"

KEY NOTES

1. PROVIDE 8-DRAWER RIFLE LOCKER.
2. HIGH SECURITY MAGNETIC CONTACTS MOUNTED TO FLOOR AND WALL SAFE.
3. REPLACE EXISTING CABINET WITH NEW LOCKABLE 78" (H) x 36" (W) x 18" (D) BLACK STEEL CABINET.
4. MOUNT CAMERA 1' FROM ROOFLINE. FIELD VERIFY LOCATION WITH OWNER.
5. PROVIDE WALL-MOUNTABLE CONNECTOR HOUSING THAT CAN ACCOMODATE TWO (2) FIBER PATCH PANELS. RETAIN THE EXISTING FIBER PATCH PANEL AND ADD A SECOND. PROVIDE SM JUMPER TO EXISTING FIBER PATCH PANEL LABELED "1-48 TO RESEARCH 1-24 SM 25-48 MM" WITHIN ROOM 213.
6. ADD INFRASTRUCTURE FOR FUTURE NEW PERIMETER DOOR UNDER PROJECT 2033119 - UPGRADE HIGH VOLTAGE.

NZP

NZP-DC: UPGRADE ESS VET HOSP, QUAR, & NECROPSY

FOR CONSTRUCTION

GHD Inc.
14501 George Carter Way Ste 102
Chantilly Virginia USA

KEY PLAN

0 1' 2' 4'
1/2"=1'-0"
0 4' 8' 16'
1/8"=1'-0"
GRAPHIC SCALE(S)

DATE	SUBMISSION
05/30/25	FINAL CD

REVISION # DATE	REVISION DESCRIPTION

Smithsonian Institution
Smithsonian Facilities
600 Maryland Avenue S.W. Suite 5001
Washington, DC 20024-2520

BUILDING NAME	NZP
ADDRESS	3001 CONNECTICUT AVE. NW WASHINGTON, DC 20008
PROJECT TITLE	NZP-DC: UPGRADE ESS VET HOSP, QUAR, & NECROPSY
OFEO PROJECT NUMBER	
A/E PROJECT NUMBER	12621037
DRAWING TITLE	VETERINARY HOSPITAL – FLOOR PLAN – LEVEL 2

WORKING STAFF	MO	SK	DB
	DESIGNED BY	DRAWN BY	CHECKED BY

SHEET NO. 10 OF 29

TY 102 FP
DISCIPLINE TYPE SEQUENCE DRAWING TYPE

6/4/2025 7:12:14 AM
TY102FP BY Approver 05/30/25 FINAL CD

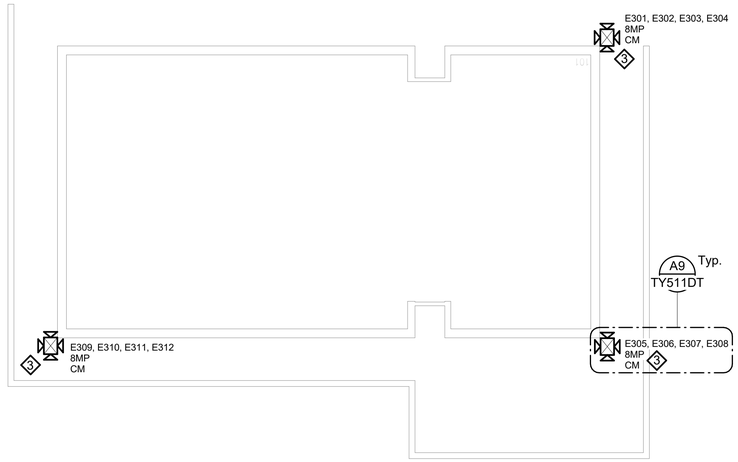

G1
TY103FP

NECROPSY BUILDING ROOF

SCALE = 1/8" = 1'-0"

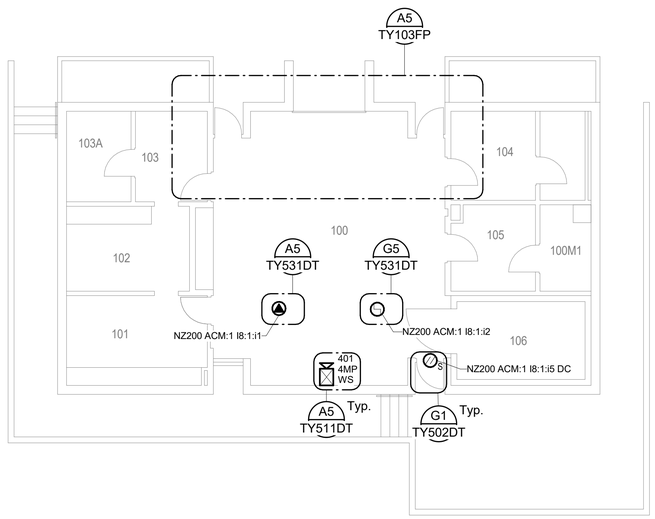

A1
TY103FP

NECROPSY BUILDING LEVEL 1

SCALE = 1/8" = 1'-0"

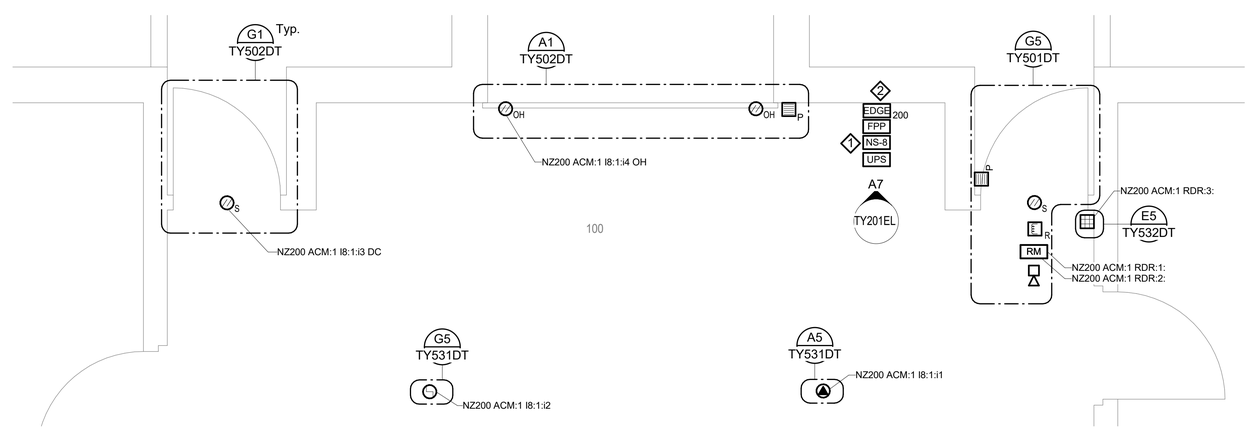

A5
TY103FP TY103FP

NECROPSY BUILDING LEVEL 1

SCALE = 1/2" = 1'-0"

KEY NOTES

1. PROVIDE NEW 12 STRAND SM FIBER WITHIN CONDUIT FROM ROOM B20 LOCATED IN ADJACENT RESEARCH BUILDING.
2. PROVIDE ONE (1) SOFTWARE HOUSE OSDP - I8 MODULE WITHIN ISTAR EDGE G2 ENCLOSURE.
3. MOUNT CAMERA 1' FROM ROOFLINE. FIELD VERIFY LOCATION WITH OWNER.

NZP

NZP-DC: UPGRADE ESS VET HOSP, QUAR, & NECROPSY

FOR CONSTRUCTION

GHD Inc.
14501 George Carter Way Ste 102
Chantilly Virginia USA

KEY PLAN

0 1' 2' 4'
1/2"=1'-0"
0 4' 8' 16'
1/8"=1'-0"
GRAPHIC SCALE(S)

DATE	SUBMISSION
05/30/25	FINAL CD

REVISION # DATE	REVISION DESCRIPTION

Smithsonian Institution
Smithsonian Facilities
600 Maryland Avenue S.W. Suite 5001
Washington, DC 20024-2520

BUILDING NAME	NZP
ADDRESS	3001 CONNECTICUT AVE. NW WASHINGTON, DC 20008
PROJECT TITLE	NZP-DC: UPGRADE ESS VET HOSP, QUAR, & NECROPSY
OFEO PROJECT NUMBER	
A/E PROJECT NUMBER	12621037
DRAWING TITLE	NECROPSY BUILDING – FLOOR PLAN – LEVEL 1 AND ROOF
WORKING STAFF	MO (DESIGNED BY) SK (DRAWN BY) DB (CHECKED BY)
SHEET NO. 11 OF 29	TY 103 FP (DISCIPLINE TYPE SEQUENCE DRAWING TYPE)

6/4/2025 7:12:14 AM
TY103FP BY Approver 05/30/25 FINAL CD

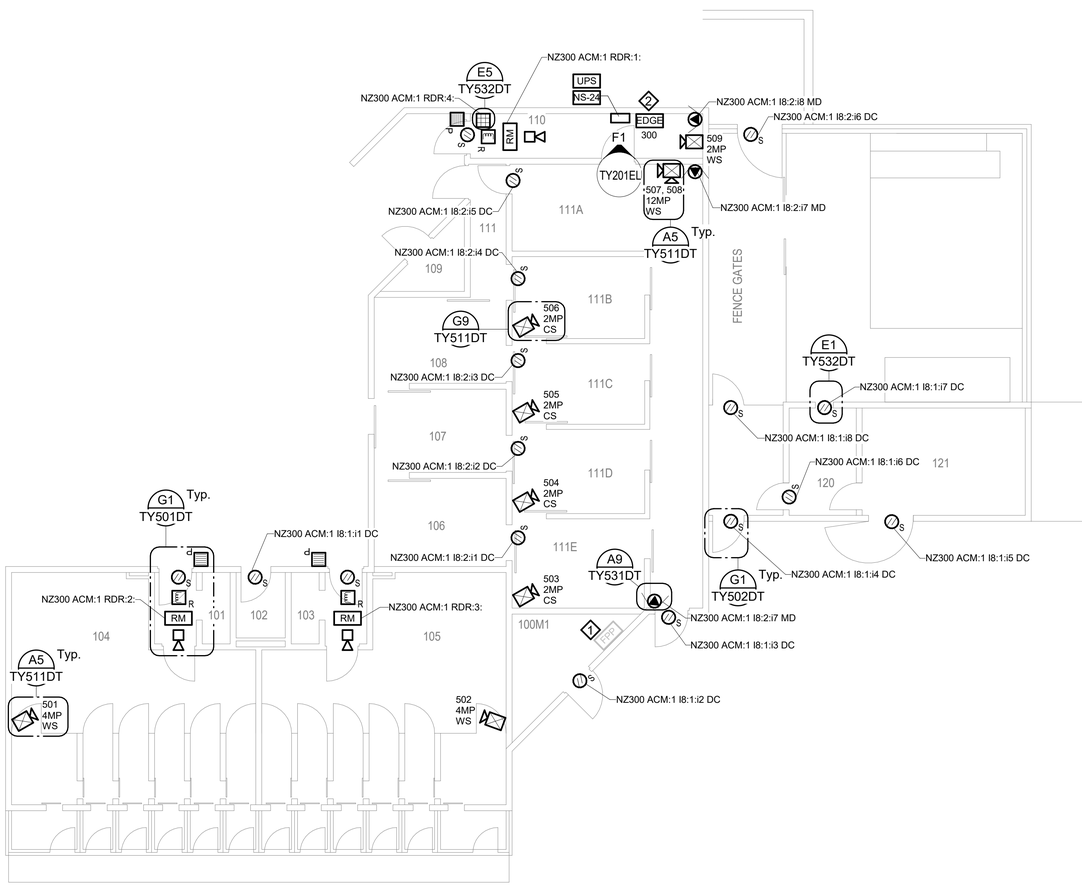

A1
TY104FP

QUARANTINE BUILDING LEVEL 1

SCALE = 1/8" = 1'-0"

KEY NOTES

1. EXISTING FIBER PANEL.
2. PROVIDE TWO (2) SOFTWARE HOUSE OSDP-I8 MODULES WITHIN iSTAR EDGE G2 ENCLOSURE.

NZP

NZP-DC: UPGRADE ESS VET HOSP, QUAR, & NECROPSY

FOR CONSTRUCTION

GHD Inc.
14501 George Carter Way Ste 102
Chantilly Virginia USA

KEY PLAN

0 4' 8' 16'
1/8"=1'-0"
GRAPHIC SCALE(S)

DATE	SUBMISSION
05/30/25	FINAL CD

REVISION # DATE	REVISION DESCRIPTION

Smithsonian Institution
Smithsonian Facilities
600 Maryland Avenue S.W. Suite 5001
Washington, DC 20024-2520

BUILDING NAME	NZP
ADDRESS	3001 CONNECTICUT AVE. NW WASHINGTON, DC 20008
PROJECT TITLE	NZP-DC: UPGRADE ESS VET HOSP, QUAR, & NECROPSY
OFEO PROJECT NUMBER	
A/E PROJECT NUMBER	12621037
DRAWING TITLE	QUARANTINE BUILDING – FLOOR PLAN – LEVEL 1
WORKING STAFF	MO (DESIGNED BY) SK (DRAWN BY) DB (CHECKED BY)
SHEET NO.	12 OF 29
	TY 104 FP (DISCIPLINE TYPE SEQUENCE DRAWING TYPE)

6/4/2025 7:12:15 AM
TY104FP BY Approver 05/30/25 FINAL CD

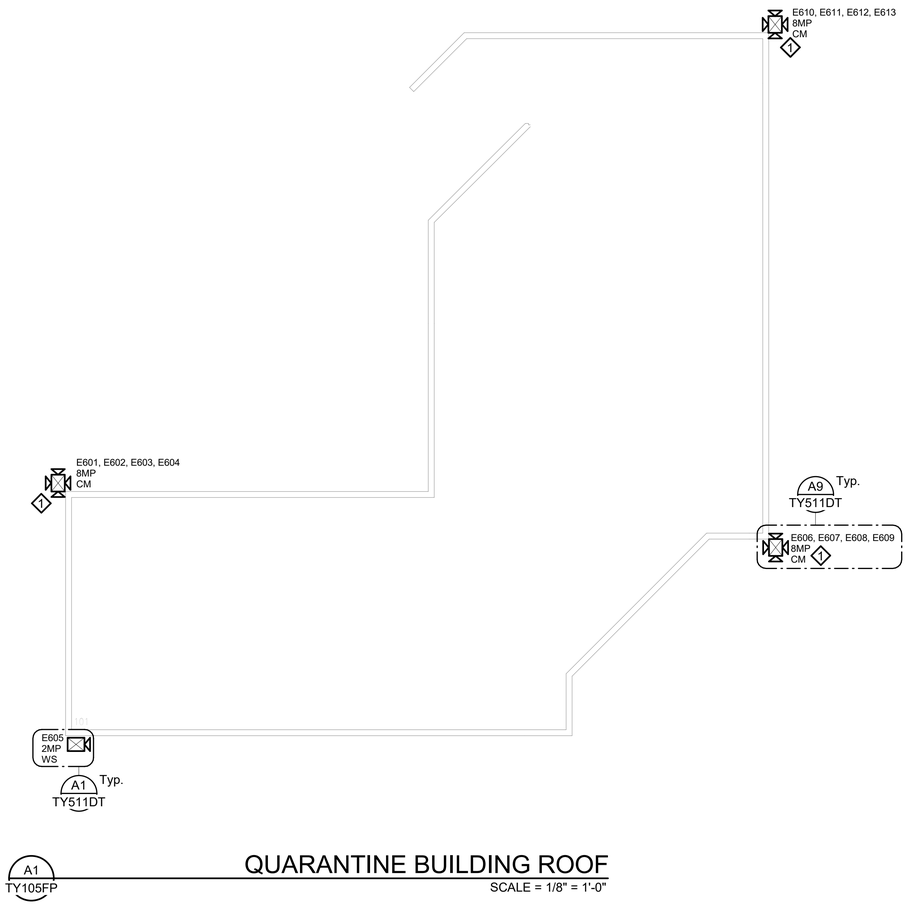

QUARANTINE BUILDING ROOF

SCALE = 1/8" = 1'-0"

KEY NOTES

1. MOUNT CAMERA 1' FROM ROOFLINE. FIELD VERIFY LOCATION WITH OWNER.

NZP

NZP-DC: UPGRADE ESS VET HOSP, QUAR, & NECROPSY

FOR CONSTRUCTION

GHD Inc.
14501 George Carter Way Ste 102
Chantilly Virginia USA

KEY PLAN

0 4' 8' 16'

1/8"=1'-0"

GRAPHIC SCALE(S)

DATE	SUBMISSION
05/30/25	FINAL CD

REVISION # DATE	REVISION DESCRIPTION

Smithsonian Institution
Smithsonian Facilities
600 Maryland Avenue S.W. Suite 5001
Washington, DC 20024-2520

BUILDING NAME	NZP
ADDRESS	3001 CONNECTICUT AVE. NW WASHINGTON, DC 20008
PROJECT TITLE	NZP-DC: UPGRADE ESS VET HOSP, QUAR, & NECROPSY
OFEO PROJECT NUMBER	
A/E PROJECT NUMBER	12621037
DRAWING TITLE	QUARANTINE BUILDING – FLOOR PLAN – ROOF
WORKING STAFF	MO (DESIGNED BY) / SK (DRAWN BY) / DB (CHECKED BY)

SHEET NO. 13 OF 29

TY 105 FP (DISCIPLINE / TYPE / SEQUENCE / DRAWING TYPE)

6/4/2025 7:12:15 AM
TY105FP BY Approver 05/30/25 FINAL CD

KEY NOTES

1. FIELD ROUTE CONDUIT AS NECESSARY.
2. SEE DRAWING TY100SP FOR CONTINUATION.
3. **FIBER CONNECTION TO VET HOSPITAL:** PROVIDE 10 GIG SFP IN EXISTING OPS NETWORK SWITCH (SFP PORT 2). PROVIDE SM JUMPER FROM EXISTING 97-120 FIBER PATCH PANEL LOCATED IN EXISTING RACK (KEY NOTE 5) IN THE SAME ROOM TO THE NEW 1 GIG SFP IN THE EXISTING OPS NETWORK SWITCH.
4. **FIBER CONNECTION TO POLICE STATION:** PROVIDE 10 GIG SFP IN EXISTING OPS NETWORK SWITCH (SFP PORT 3). PROVIDE NEW SM JUMPER FROM THE (1 TO 72) FIBER PATCH PANEL PORTS 1 & 2 LOCATED IN EXISTING RACK (KEY NOTE 5) IN THE SAME ROOM TO THE NEW 10 GIG SFP IN THE EXISTING OPS NETWORK SWITCH. WITHIN POLICE STATION IT ROOM 110, PROVIDE NEW SM JUMPER FROM THE (1 TO 72) FIBER PATCH PANEL (BOX 6) PORTS 1 & 2 TO (1 TO 48) FIBER PATCH PANEL (BOX 5) PORTS 7 & 8. WITHIN OPS SERVER ROOM 109, PROVIDE NEW SM JUMPER FROM THE (1 TO 48) FIBER PATCH PANEL (TIE TO IT RM) IN RACK 5 TO THE NEW 10 GIG SFP ON THE EXISTING OPS FIBER SWITCH (SFP PORT 1) IN RACK 6. ONCE THE 10 GIG SFP SM CONNECTION IS ACTIVE, REMOVE THE CURRENT MM CONNECTION TO THE POLICE STATION.
5. EXISTING RACK LOCATION.
6. PROVIDE NEW NVR IN EXISTING RACK WITHIN POLICE STATION OPS SERVER ROOM 109.

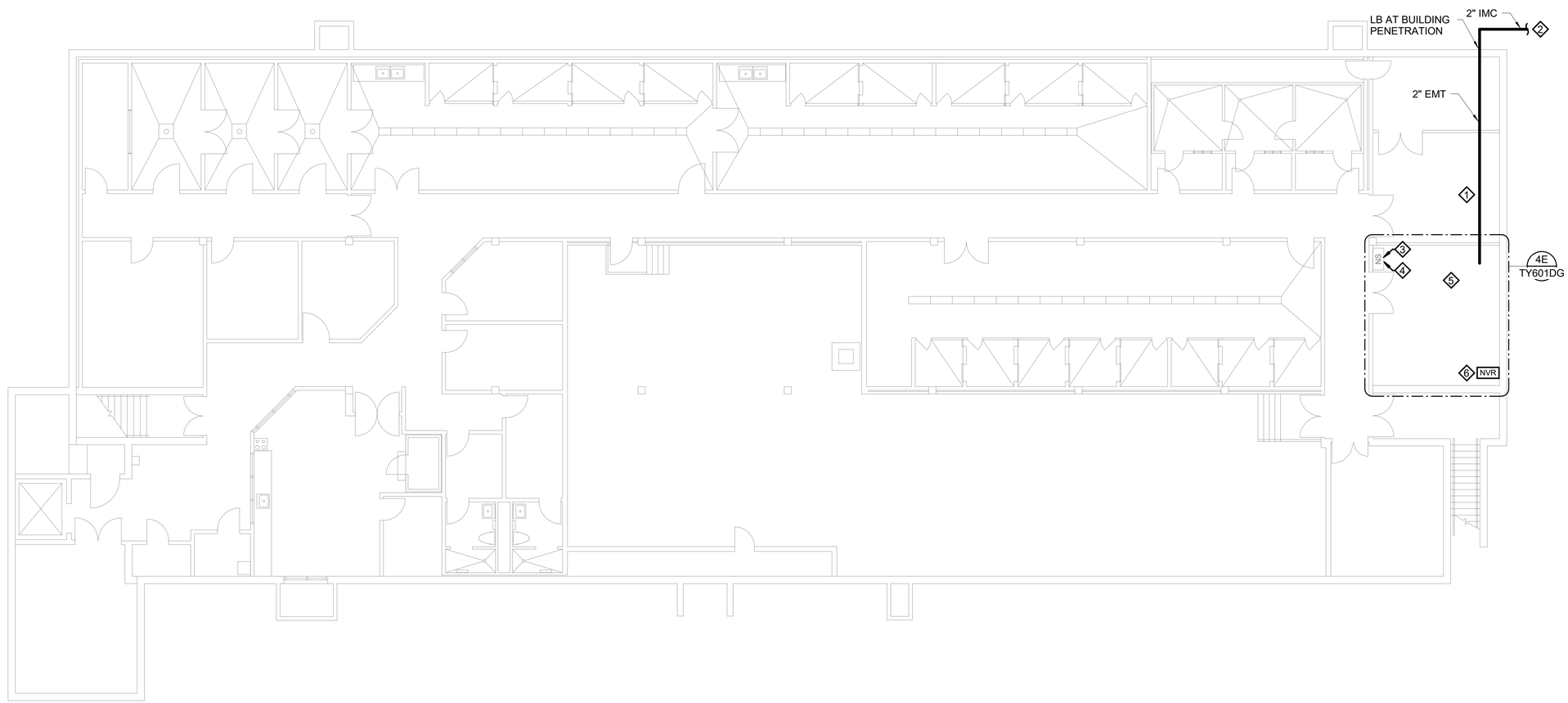

A1
TY106FP

RESEARCH BUILDING BASEMENT

SCALE = 1/8" = 1'-0"

NZP

NZP-DC: UPGRADE ESS VET HOSP, QUAR, & NECROPSY

FOR CONSTRUCTION

GHD Inc.
14501 George Carter Way Ste 102
Chantilly Virginia USA

KEY PLAN

0 4' 8' 16'
1/8"=1'-0"
GRAPHIC SCALE(S)

DATE	SUBMISSION
05/30/25	FINAL CD

REVISION # DATE	REVISION DESCRIPTION

Smithsonian Institution
Smithsonian Facilities
600 Maryland Avenue S.W. Suite 5001
Washington, DC 20024-2520

BUILDING NAME	NZP
ADDRESS	3001 CONNECTICUT AVE. NW WASHINGTON, DC 20008
PROJECT TITLE	NZP-DC: UPGRADE ESS VET HOSP, QUAR, & NECROPSY
OFEO PROJECT NUMBER	
A/E PROJECT NUMBER	12621037
DRAWING TITLE	RESEARCH BUILDING – FLOOR PLAN – BASEMENT
WORKING STAFF	MO (DESIGNED BY) / SK (DRAWN BY) / DB (CHECKED BY)
SHEET NO.	14 OF 29
DISCIPLINE / TYPE / SEQUENCE / DRAWING TYPE	TY 106 FP

6/4/2025 7:12:15 AM
TY106FP BY Approver 05/30/25 FINAL CD

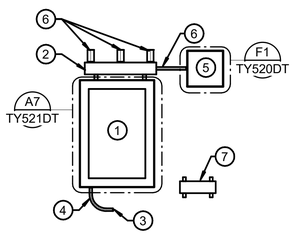

DETAIL NOTES:

A. (1) 20 AMP GENERATOR POWER CIRCUIT TO LOW PROFILE WALL CABINET
B. PROVIDE 19.1 MM (3/4") FIRE-RETARDANT TREATED PLYWOOD ON WALLS UP TO 2438.4 MM (8').
C. PROVIDE AND BOND ENCLOSURES TO THE TGB. CONNECT THE NEW TGB TO AN EXISTING TGB. MINIMUM CONDUCTOR SIZE IS 6 AWG. SIZE ACCORDING TO DISTANCE.

DETAIL KEYNOTES: (#)

1. LOW PROFILE WALL CABINET
2. 101.6 MM X 101.6 MM (4"X4") WIRE TROUGH
3. 120VAC, 20A EMERGENCY POWER CIRCUIT
4. EMT CONDUIT - SIZE AS REQUIRED
5. iSTAR EDGE G2 WITH TWO (2) OSDP I8 MODULES
6. (2") EMT CONDUIT
7. 12" X 4" TELECOMMUNICATIONS GROUNDING BUS BAR.

QUARANTINE BUILDING LEVEL 1
0' - 0"

F1
TY104FP TY201EL

QUARANTINE BUILDING CORRIDOR 110

SCALE = NTS

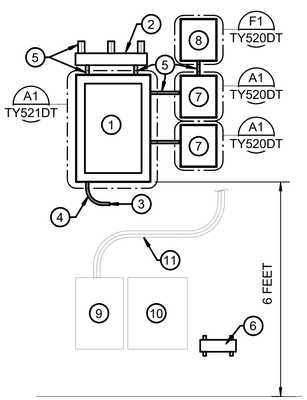

DETAIL NOTES:

A. (1) 20 AMP GENERATOR CIRCUIT TO LOW PROFILE WALL CABINET
B. PROVIDE 19.1 MM (3/4") FIRE-RETARDANT TREATED PLYWOOD ON WALL BEHIND RACK AND WIRE TROUGH
C. PROVIDE AND BOND ENCLOSURES TO THE TGB. CONNECT THE NEW TGB TO AN EXISTING TGB. MINIMUM CONDUCTOR SIZE IS 6 AWG. SIZE ACCORDING TO DISTANCE.

DETAIL KEYNOTES: (#)

1. LOW PROFILE WALL CABINET
2. 101.6 MM X 101.6 MM (4"X4") WIRE TROUGH
3. 120VAC, 20A GENERATOR POWER CIRCUIT
4. EMT CONDUIT - SIZE AS REQUIRED
5. (1") EMT CONDUIT
6. 12" X 4" TELECOMMUNICATIONS GROUNDING BUS BAR.
7. I/O ENCLOSURE
8. iSTAR EDGE G2
9. EXISTING ISTAR ULTRA ENCLOSURE
10. EXISTING POWER SUPPLY ENCLOSURE
11. EXISTING EMT CONDUIT

VET HOSPITAL - LEVEL 1
0' - 0"

A1
TY401EP TY201EL

VETERIANARY HOSPITAL ROOM 100M3

SCALE = NTS

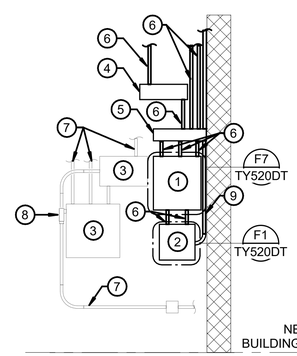

DETAIL NOTES:

A. DETAIL IS DIAGRAMMATIC.
B. (1) 20 AMP EMERGENCY POWER CIRCUIT TO UPS INTEGRATED POWER SYSTEM ENCLOSURE.
C. BOND ENCLOSURES TO BUILDING GROUND.

DETAIL KEYNOTES: (#)

1. UPS INTEGRATED POWER SYSTEM WITH 8-PORT NETWORK SWITCH
2. iSTAR EDGE G2 WITH ONE (1) OSDP I8 MODULE
3. EXISTING FIRE PANEL
4. FIBER PATCH PANEL
5. WIRE TROUGH
6. EMT CONDUIT - SIZE AS REQUIRED
7. EXISTING CONDUIT
8. EXISTING CONDULET
9. EMT CONDUIT - 1" MINIMUM

NECROPSY BUILDING LEVEL 1
0' - 0"

A7
TY103FP TY201EL

NECROPSY BUILDING ROOM 100

SCALE = NTS

NZP

NZP-DC: UPGRADE ESS VET HOSP, QUAR, & NECROPSY

FOR CONSTRUCTION

GHD Inc.
14501 George Carter Way Ste 102
Chantilly Virginia USA

STAMP

KEY PLAN

GRAPHIC SCALE(S)

DATE	SUBMISSION
05/30/25	FINAL CD

REVISION # DATE	REVISION DESCRIPTION

Smithsonian Institution
Smithsonian Facilities
600 Maryland Avenue S.W. Suite 5001
Washington, DC 20024-2520

BUILDING NAME	NZP
ADDRESS	3001 CONNECTICUT AVE. NW WASHINGTON, DC 20008
PROJECT TITLE	NZP-DC: UPGRADE ESS VET HOSP, QUAR, & NECROPSY
OFEO PROJECT NUMBER	
A/E PROJECT NUMBER	12621037
DRAWING TITLE	ELEVATIONS
WORKING STAFF	MO (DESIGNED BY) SK (DRAWN BY) DB (CHECKED BY)
SHEET NO.	15 OF 29
	TY 201 EL (DISCIPLINE TYPE SEQUENCE DRAWING TYPE)

6/4/2025 7:12:16 AM
TY201EL BY Approver 05/30/25 FINAL CD

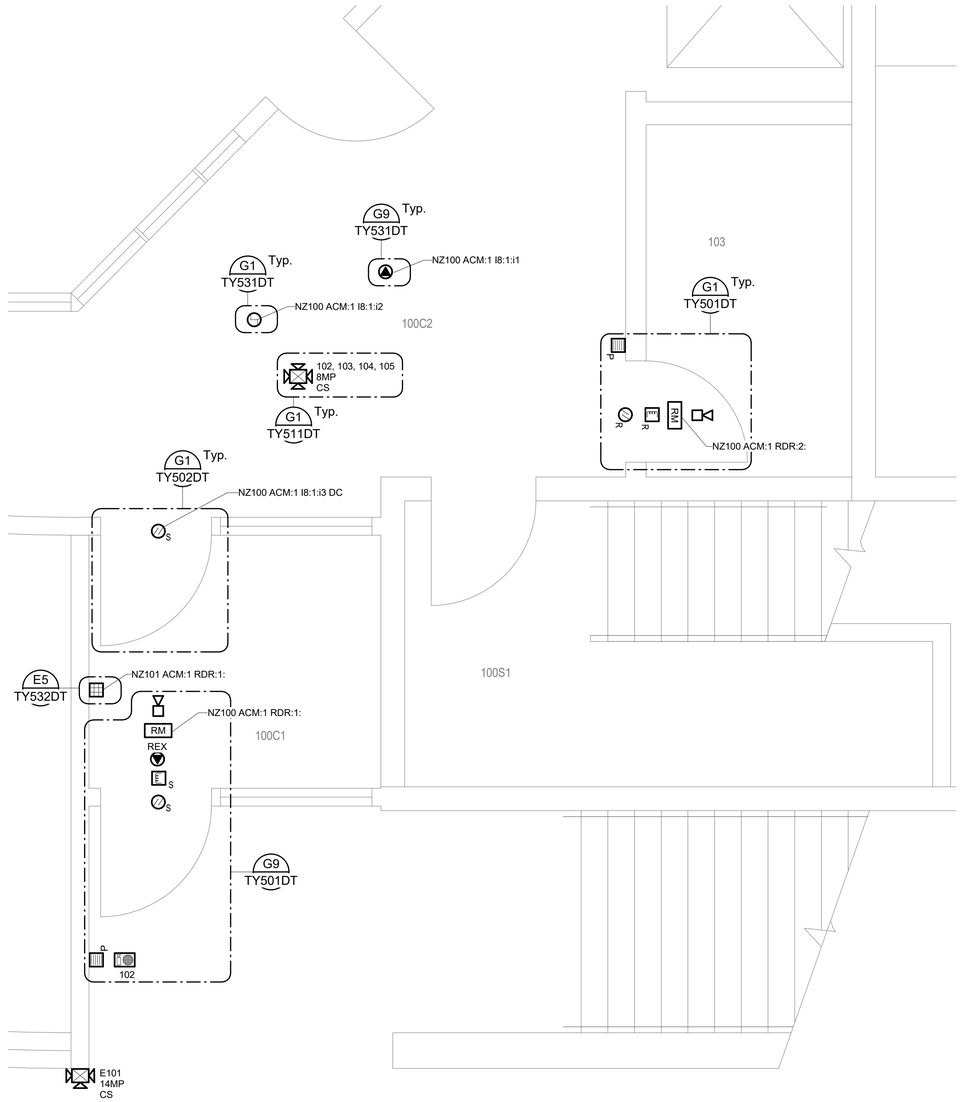

A1
TY101FP TY401EP

VETERINARY HOSPITAL LEVEL 1

SCALE = 1/2" = 1'-0"

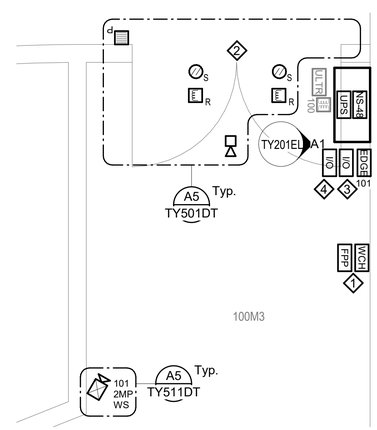

A8
TY101FP TY401EP

VETERINARY HOSPITAL ROOM 100M3

SCALE = 1/2" = 1'-0"

KEY NOTES

1. PROVIDE WALL-MOUNTABLE CONNECTOR HOUSING THAT CAN ACCOMODATE TWO (2) FIBER PATCH PANELS. RETAIN THE EXISTING FIBER PATCH PANEL AND ADD A SECOND. PROVIDE SM JUMPER TO NEW NETWORK SWITCH (NS-48) LOCATED IN MECHANICAL ROOM 100M3.
2. DIRECT CONNECTOR DOOR DEVICES TO iSTAR ULTRA.

NZP

NZP-DC: UPGRADE ESS VET HOSP, QUAR, & NECROPSY

FOR CONSTRUCTION

GHD Inc.
14501 George Carter Way Ste 102
Chantilly Virginia USA

KEY PLAN

0 1' 2' 4'
1/2"=1'-0"
GRAPHIC SCALE(S)

DATE	SUBMISSION
05/30/25	FINAL CD

REVISION # DATE	REVISION DESCRIPTION

Smithsonian Institution
Smithsonian Facilities
600 Maryland Avenue S.W. Suite 5001
Washington, DC 20024-2520

BUILDING NAME	NZP
ADDRESS	3001 CONNECTICUT AVE. NW WASHINGTON, DC 20008
PROJECT TITLE	NZP-DC: UPGRADE ESS VET HOSP, QUAR, & NECROPSY
OFEO PROJECT NUMBER	
A/E PROJECT NUMBER	12621037
DRAWING TITLE	ENLARGED PLANS
WORKING STAFF	MO (DESIGNED BY) / SK (DRAWN BY) / DB (CHECKED BY)
SHEET NO.	16 OF 29
	TY 4 0 1 E P (DISCIPLINE / TYPE / SEQUENCE / DRAWING TYPE)

6/4/2025 7:12:17 AM
TY401EP BY Approver 05/30/25 FINAL CD

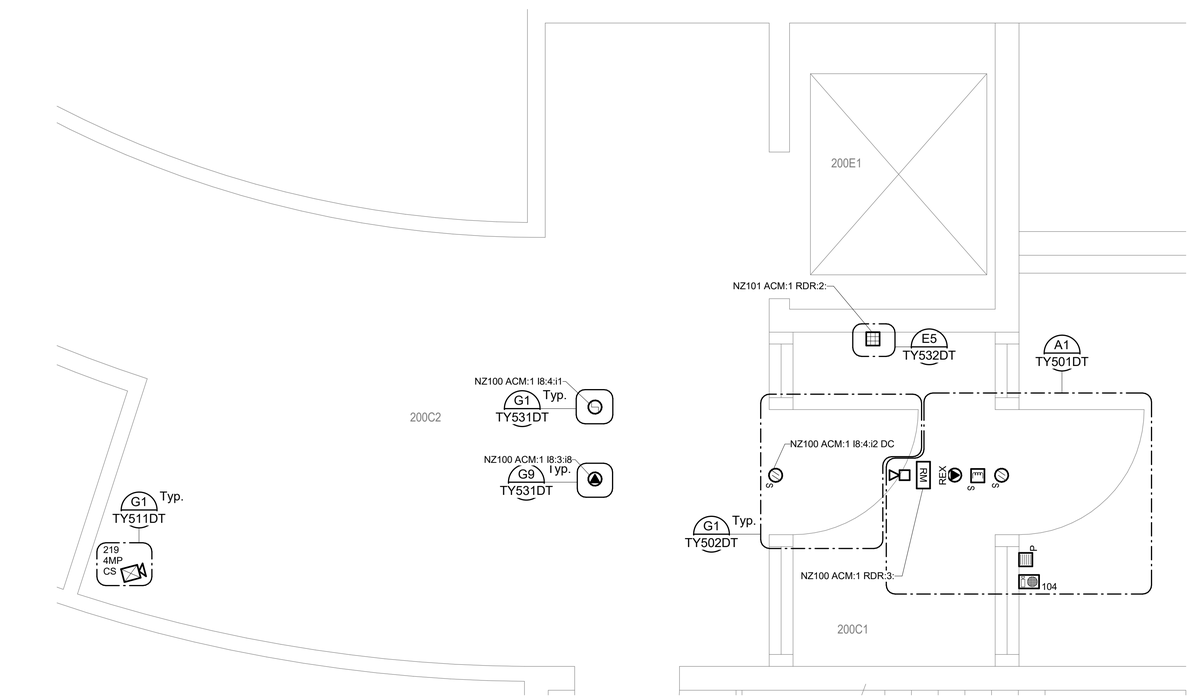

A1
TY102FP TY402EP

VETERINARY HOSPITAL LEVEL 2

SCALE = 1/2" = 1'-0"

6/4/2025 7:12:17 AM
TY402EP BY Approver 05/30/25 FINAL CD

NZP

NZP-DC: UPGRADE ESS VET HOSP, QUAR, & NECROPSY

FOR CONSTRUCTION

GHD Inc.
14501 George Carter Way Ste 102
Chantilly Virginia USA

STAMP

KEY PLAN

0 1' 2' 4'
1/2"=1'-0"
GRAPHIC SCALE(S)

DATE	SUBMISSION
05/30/25	FINAL CD

REVISION # DATE	REVISION DESCRIPTION

Smithsonian Institution
Smithsonian Facilities
600 Maryland Avenue S.W. Suite 5001
Washington, DC 20024-2520

BUILDING NAME	NZP
ADDRESS	3001 CONNECTICUT AVE. NW WASHINGTON, DC 20008
PROJECT TITLE	NZP-DC: UPGRADE ESS VET HOSP, QUAR, & NECROPSY
OFEO PROJECT NUMBER	
A/E PROJECT NUMBER	12621037
DRAWING TITLE	ENLARGED PLANS
WORKING STAFF	MO (DESIGNED BY) / SK (DRAWN BY) / DB (CHECKED BY)
SHEET NO.	17 OF 29
	TY 4 02 E P (DISCIPLINE / TYPE / SEQUENCE / DRAWING TYPE)

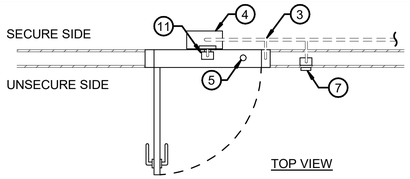

DETAIL NOTES:
A. DETAIL IS DIAGRAMMATIC.
B. COORDINATE THE ACCESS PANEL LOCATION IN AREAS WITH INACCESSIBLE CEILINGS WITH OWNER.

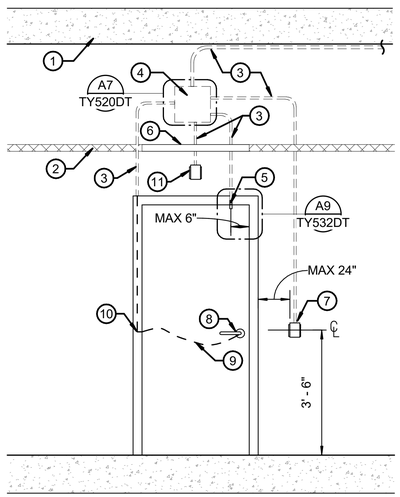

FRONT VIEW; UNSECURE SIDE

DETAIL KEY NOTES: (#)
1. CEILING SLAB
2. FINISHED CEILING
3. EMT CONDUIT
4. JUNCTION BOX WITH COVER, SIZE AS REQUIRED
5. DOOR POSITION SWITCH
6. ACCESS PANEL - WHERE APPLICABLE
7. CARD READER WITH BACK BOX
8. ELECTRIFIED LOCKSET WITH INTEGRATED REX
9. CABLING IN DOOR
10. ELECTRIFIED TRANSFER HINGE
11. DOOR SOUNDER (SECURE SIDE)

SINGLE ACS DOOR WITH RECESSED DPS AND ELECTRIFIED LOCKSET

G1
TY102FP TY501DT
SCALE = NTS

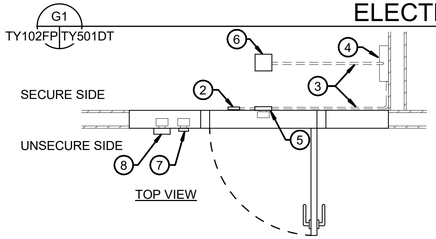

DETAIL NOTES:
A. DETAIL IS DIAGRAMMATIC.
B. COORDINATE THE ACCESS PANEL LOCATION IN AREAS WITH INACCESSIBLE CEILINGS WITH OWNER.
C. UTILIZE EXISTING PATHWAYS WITHIN GLASS CURTAIN WALL SYSTEM TO THE FUREST EXTEND POSSIBLE.
D. LOCATE JUNCTION BOX WITH COVER IN ADJACENT ROOM.

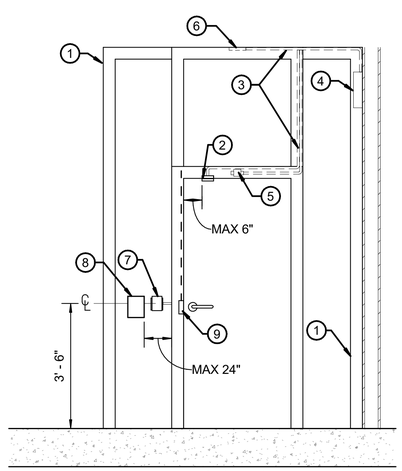

FRONT VIEW; UNSECURE SIDE

DETAIL KEY NOTES: (#)
1. GLASS CURTAIN WALL SYSTEM
2. DOOR POSITION SWITCH
3. EMT CONDUIT
4. JUNCTION BOX WITH COVER, SIZE AS REQUIRED
5. REQUEST TO EXIT MOTION DETECTOR (SECURE SIDE)
6. DOOR SOUNDER (CEILING MOUNT - SECURE SIDE)
7. CARD READER WITH BACK BOX
8. VIDEO INTERCOM FLUSH MOUNT. MOUNT AT 48" ON CENTER
9. ELECTRIFIED STRIKE

SINGLE ACS STOREFRONT DOOR WITH ELECTRIFIED STRIKE AND INTERCOM

A1
TY102FP TY501DT
SCALE = NTS

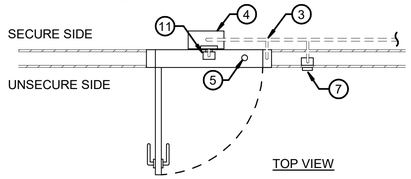

DETAIL NOTES:
A. DETAIL IS DIAGRAMMATIC.
B. COORDINATE THE ACCESS PANEL LOCATION IN AREAS WITH INACCESSIBLE CEILINGS WITH OWNER.

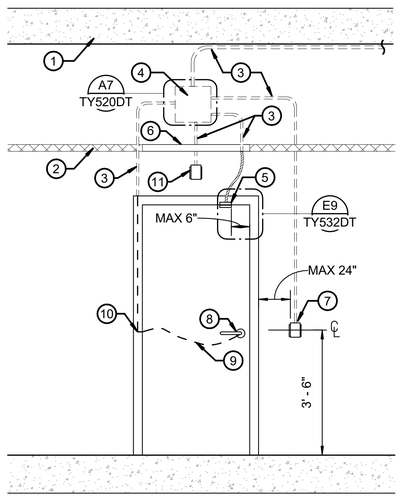

FRONT VIEW; UNSECURE SIDE

DETAIL KEY NOTES: (#)
1. CEILING SLAB
2. FINISHED CEILING
3. EMT CONDUIT
4. JUNCTION BOX WITH COVER, SIZE AS REQUIRED
5. DOOR POSITION SWITCH
6. ACCESS PANEL - WHERE APPLICABLE
7. CARD READER OR CARD READER/KEYPAD WITH BACK BOX
8. ELECTRIFIED LOCKSET WITH INTEGRATED REX
9. CABLING IN DOOR
10. ELECTRIFIED TRANSFER HINGE
11. DOOR SOUNDER (SECURE SIDE)

SINGLE ACS DOOR WITH SURFACE DPS AND ELECTRIFIED LOCKSET

G5
TY102FP TY501DT
SCALE = NTS

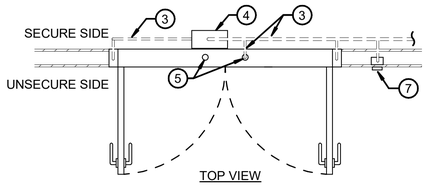

DETAIL NOTES:
A. DETAIL IS DIAGRAMMATIC.
B. COORDINATE THE ACCESS PANEL LOCATION IN AREAS WITH INACCESSIBLE CEILINGS WITH OWNER.

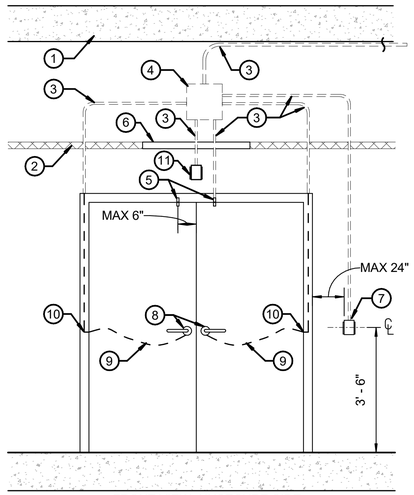

FRONT VIEW; UNSECURE SIDE

DETAIL KEY NOTES: (#)
1. CEILING SLAB
2. FINISHED CEILING
3. EMT CONDUIT
4. JUNCTION BOX WITH COVER, SIZE AS REQUIRED
5. DOOR POSITION SWITCH
6. ACCESS PANEL - WHERE APPLICABLE
7. CARD READER WITH BACK BOX
8. ELECTRIFIED LOCKSET WITH INTEGRATED REX
9. CABLING IN DOOR
10. ELECTRIFIED TRANSFER HINGE
11. DOOR SOUNDER (SECURE SIDE)

DOUBLE ACS DOOR WITH TWO ELECTRIFIED LOCKSETS

A5
TY102FP TY501DT
SCALE = NTS

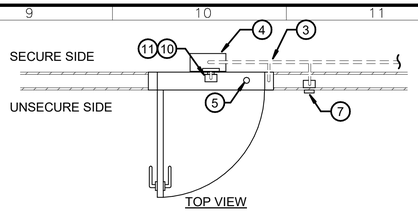

DETAIL NOTES:
A. DETAIL IS DIAGRAMMATIC.
B. COORDINATE THE ACCESS PANEL LOCATION IN AREAS WITH INACCESSIBLE CEILINGS WITH OWNER.

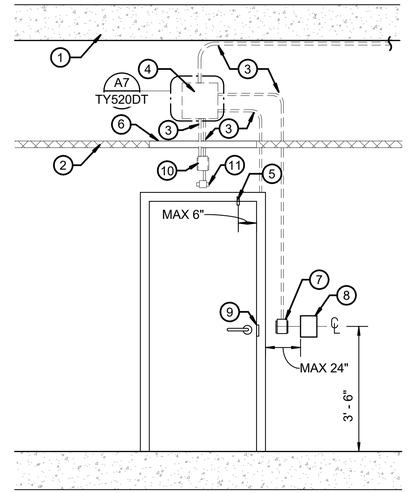

FRONT VIEW; UNSECURE SIDE

DETAIL KEY NOTES: (#)
1. CEILING SLAB
2. FINISHED CEILING
3. EMT CONDUIT
4. JUNCTION BOX WITH COVER, SIZE AS REQUIRED
5. DOOR POSITION SWITCH
6. ACCESS PANEL - WHERE APPLICABLE
7. CARD READER WITH BACK BOX
8. VIDEO INTERCOM FLUSH MOUNT. MOUNT AT 48" ON CENTER
9. ELECTRIFIED STRIKE
10. DOOR SOUNDER (SECURE SIDE)
11. REQUEST TO EXIT MOTION DETECTOR (SECURE SIDE)

SINGLE DOOR WITH CARD READER

G9
TY401EP TY501DT
SCALE = NTS

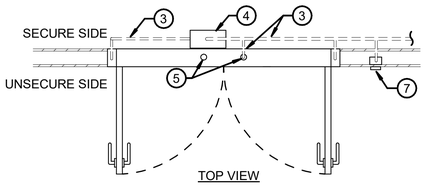

DETAIL NOTES:
A. DETAIL IS DIAGRAMMATIC.
B. COORDINATE THE ACCESS PANEL LOCATION IN AREAS WITH INACCESSIBLE CEILINGS WITH OWNER.

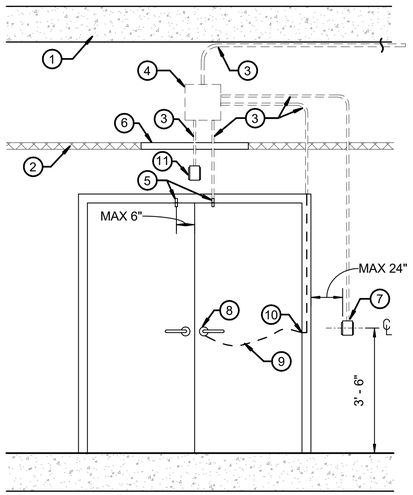

FRONT VIEW; UNSECURE SIDE

DETAIL KEY NOTES: (#)
1. CEILING SLAB
2. FINISHED CEILING
3. EMT CONDUIT
4. JUNCTION BOX WITH COVER, SIZE AS REQUIRED
5. DOOR POSITION SWITCH
6. ACCESS PANEL - WHERE APPLICABLE
7. CARD READER WITH BACK BOX
8. ELECTRIFIED LOCKSET WITH INTEGRATED REX
9. CABLING IN DOOR
10. ELECTRIFIED TRANSFER HINGE
11. DOOR SOUNDER (SECURE SIDE)

DOUBLE ACS DOOR WITH ONE ELECTRIFIED LOCKSET

A9
TY102FP TY501DT
SCALE = NTS

NZP

NZP-DC: UPGRADE ESS VET HOSP, QUAR, & NECROPSY

FOR CONSTRUCTION

GHD Inc.
14501 George Carter Way Ste 102
Chantilly Virginia USA

KEY PLAN

GRAPHIC SCALE(S)

DATE	SUBMISSION
05/30/25	FINAL CD

REVISION # DATE	REVISION DESCRIPTION

Smithsonian Institution
Smithsonian Facilities
600 Maryland Avenue S.W. Suite 5001
Washington, DC 20024-2520

BUILDING NAME	NZP
ADDRESS	3001 CONNECTICUT AVE. NW WASHINGTON, DC 20008
PROJECT TITLE	NZP-DC: UPGRADE ESS VET HOSP, QUAR, & NECROPSY
OFEO PROJECT NUMBER	
A/E PROJECT NUMBER	12621037
DRAWING TITLE	DOOR DETAILS
WORKING STAFF	MO (DESIGNED BY) / SK (DRAWN BY) / DB (CHECKED BY)
SHEET NO.	18 OF 29
	TY 501 DT (DISCIPLINE / TYPE / SEQUENCE / DRAWING TYPE)

6/4/2025 7:12:18 AM
TY501DT BY Approver 05/30/25 FINAL CD

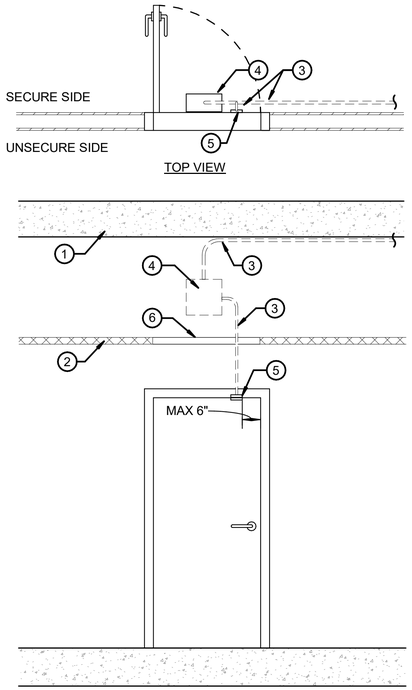

DETAIL NOTES:
A. DETAIL IS DIAGRAMMATIC.
B. COORDINATE THE ACCESS PANEL LOCATION IN AREAS WITH INACCESSIBLE CEILINGS WITH OWNER.

DETAIL KEY NOTES: #
1. CEILING SLAB
2. FINISHED CEILING
3. EMT CONDUIT
4. JUNCTION BOX WITH COVER, SIZE AS REQUIRED
5. DOOR POSITION SWITCH
6. ACCESS PANEL - WHERE APPLICABLE

G1 TY101FP TY502DT

SINGLE IDS DOOR

SCALE = NTS

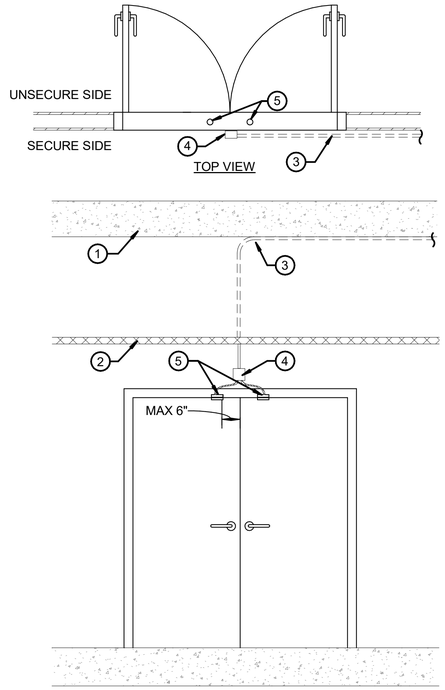

DETAIL NOTES:
A. DETAIL IS DIAGRAMMATIC.

DETAIL KEY NOTES: #
1. CEILING SLAB
2. FINISHED CEILING
3. EMT CONDUIT
4. JUNCTION BOX WITH COVER, SIZE AS REQUIRED
5. DOOR POSITION SWITCH

G5 TY102FP TY502DT

DOUBLE IDS DOOR

SCALE = NTS

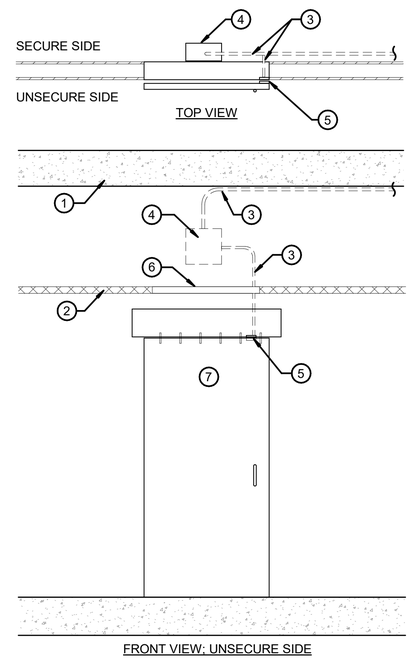

DETAIL NOTES:
A. DETAIL IS DIAGRAMMATIC.
B. COORDINATE THE ACCESS PANEL LOCATION IN AREAS WITH INACCESSIBLE CEILINGS WITH OWNER.

DETAIL KEY NOTES: #
1. CEILING SLAB
2. FINISHED CEILING
3. EMT CONDUIT
4. JUNCTION BOX WITH COVER, SIZE AS REQUIRED
5. DOOR POSITION SWITCH
6. ACCESS PANEL - WHERE APPLICABLE
7. SLIDING DOOR

G9 TY102FP TY502DT

SINGLE SLIDING IDS DOOR

SCALE = 1/2" = 1'-0"

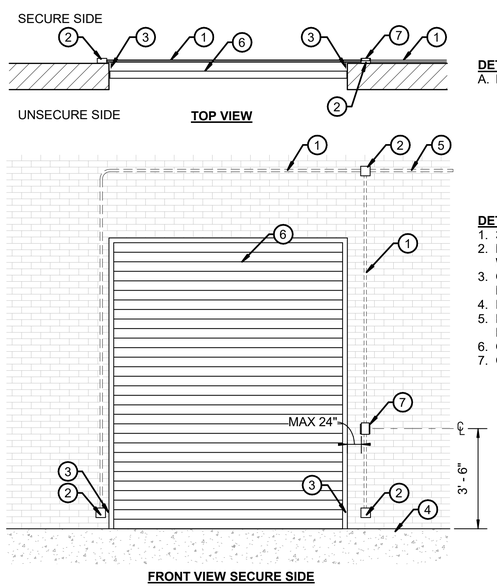

DETAIL NOTES:
A. DRAWING IS DIAGRAMMATIC.

DETAIL KEY NOTES: #
1. 3/4" EMT CONDUIT
2. MINIMUM 4"X4"X2.5" JUNCTION BOX WITH COVER
3. OVERHEAD DOOR CONTACT WITH MOUNTING BRACKETS
4. FINISHED FLOOR
5. ROUTE WIRING TO SECURITY PANELS
6. OVERHEAD DOOR
7. CARD READER WITH BACK BOX

A1 TY102FP TY502DT

OVERHEAD DOOR

SCALE = NTS

6/4/2025 7:12:19 AM
TY502DT BY Approver 05/30/25 FINAL CD

NZP

NZP-DC: UPGRADE ESS VET HOSP, QUAR, & NECROPSY

FOR CONSTRUCTION

GHD Inc.
14501 George Carter Way Ste 102
Chantilly Virginia USA

KEY PLAN

GRAPHIC SCALE(S)

DATE	SUBMISSION
05/30/25	FINAL CD

REVISION # DATE	REVISION DESCRIPTION

Smithsonian Institution
Smithsonian Facilities
600 Maryland Avenue S.W. Suite 5001
Washington, DC 20024-2520

BUILDING NAME	NZP
ADDRESS	3001 CONNECTICUT AVE. NW WASHINGTON, DC 20008
PROJECT TITLE	NZP-DC: UPGRADE ESS VET HOSP, QUAR, & NECROPSY
OFEO PROJECT NUMBER	
A/E PROJECT NUMBER	12621037
DRAWING TITLE	DOOR DETAILS
WORKING STAFF	MO (DESIGNED BY) / SK (DRAWN BY) / DB (CHECKED BY)

SHEET NO. 19 OF 29

TY 502 DT
DISCIPLINE TYPE SEQUENCE DRAWING TYPE

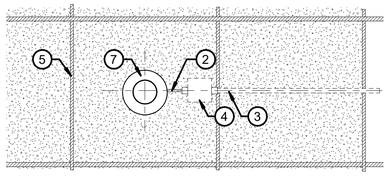

BOTTOM VIEW

DETAIL NOTES:

A. MOUNT THE CAMERA IN THE CENTER OF THE CEILING TILE.
B. COORDINATE THE CAMERA LOCATION WITH OTHER DISCIPLINES TO PROVIDE REQUIRED VIDEO COVERAGE.
C. COORDINATE FINAL CAMERA VIEWS WITH THE OWNER.
D. PROVIDE BRIDGE TO SUPPORT CAMERA.

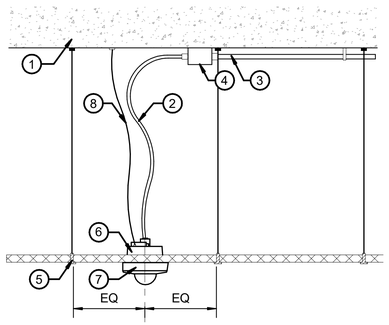

SIDE VIEW

DETAIL KEY NOTES: #

1. CEILING SLAB
2. FLEXIBLE METALLIC CONDUIT - SIZE AS REQUIRED
3. EMT CONDUIT - SIZE AS REQUIRED
4. JUNCTION BOX - SIZE AS REQUIRED
5. SUSPENDED CEILING GRID
6. MANUFACTURERS MOUNTING ASSEMBLY
7. INTERIOR DOME CAMERA
8. MINIMUM #12 HANGER WIRE, PER PROJECT SEISMIC REQUIREMENTS

G1 CAMERA - SURFACE CEILING MOUNT

TY102FP TY511DT — SCALE = NTS

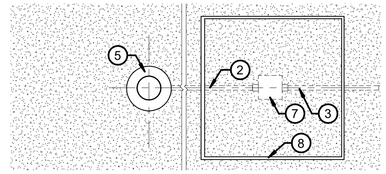

BOTTOM VIEW

DETAIL NOTES:

A. COORDINATE THE CAMERA LOCATION WITH OTHER DISCIPLINES TO PROVIDE REQUIRED VIDEO COVERAGE.
B. COORDINATE FINAL CAMERA VIEWS WITH THE OWNER.
C. COORDINATE THE JUNCTION BOX AND ACCESS PANEL LOCATION WITH THE ARCHITECT AND OTHER TRADES.

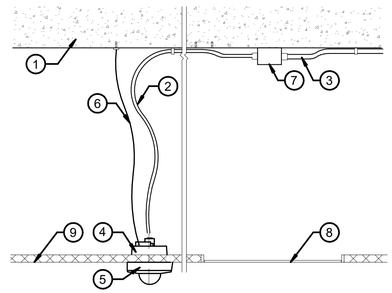

SIDE VIEW

DETAIL KEY NOTES: #

1. CEILING SLAB
2. FLEXIBLE METALLIC CONDUIT
3. EMT CONDUIT
4. MANUFACTURERS MOUNTING ASSEMBLY
5. INTERIOR DOME CAMERA
6. MINIMUM #12 HANGER WIRE, PER PROJECT SEISMIC REQUIREMENTS
7. JUNCTION BOX - SIZE AS REQUIRED
8. ACCESS PANEL
9. CEILING

G5 CAMERA - SURFACE CEILING MOUNT - GYPSUM CEILING

TY102FP TY511DT — SCALE = NTS

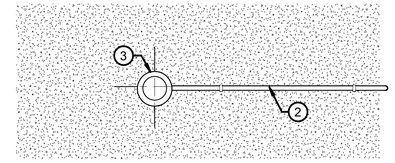

BOTTOM VIEW

DETAIL NOTES:

A. MOUNT CAMERA ASSEMBLY TO AVOID OBSTRUCTIONS AND TO PROVIDE THE FIELD-OF-VIEW DESIRED.
B. FIRMLY ATTACH CAMERA ASSEMBLIES TO SUBSTANTIAL CEILING SURFACES OR STRUCTURAL MEMBERS.
C. COORDINATE THE CAMERA LOCATION WITH OTHER DISCIPLINES TO PROVIDE REQUIRED VIDEO COVERAGE.
D. COORDINATE FINAL CAMERA VIEWS WITH THE OWNER.

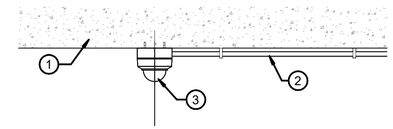

SIDE VIEW

DETAIL KEY NOTES: #

1. CEILING SLAB
2. EMT CONDUIT - SIZE AS REQUIRED
3. SURFACE MOUNTED DOME CAMERA

G9 CCTV SURFACE CEILING MOUNTED CAMERA

TY104FP TY511DT — SCALE = NTS

DETAIL NOTES:

A. DETAIL IS DIAGRAMMATIC, THE CAMERA MOUNTING ASSEMBLY VARIES BY MANUFACTURER.
B. MOUNT CAMERA ASSEMBLY AT MOST DESIRABLE HEIGHT ABOVE FINISHED FLOOR TO AVOID OBSTRUCTIONS AND PROVIDE THE FIELD-OF-VIEW DESIRED.
C. FIRMLY ATTACH CAMERA ASSEMBLIES TO SUBSTANTIAL CEILING SURFACES OR STRUCTURAL MEMBERS.
D. COORDINATE THE CAMERA LOCATION WITH OTHER DISCIPLINES TO PROVIDE REQUIRED VIDEO COVERAGE.
E. COORDINATE FINAL CAMERA VIEWS WITH THE OWNER.

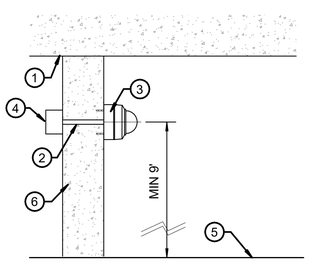

SIDE VIEW

DETAIL KEY NOTES: #

1. CEILING SLAB
2. EMT CONDUIT - SIZE AS REQUIRED
3. DOME CAMERA
4. JUNCTION BOX - SIZE AS REQUIRED
5. FINISHED FLOOR
6. WALL

A1 EXTERIOR SURFACE WALL MOUNTED CAMERA

TY102FP TY511DT — SCALE = NTS

DETAIL NOTES:

A. DETAIL IS DIAGRAMMATIC, THE CAMERA MOUNTING ASSEMBLY VARIES BY MANUFACTURER.
B. MOUNT CAMERA ASSEMBLY AT MOST DESIRABLE HEIGHT ABOVE FINISHED FLOOR TO AVOID OBSTRUCTIONS AND PROVIDE THE FIELD-OF-VIEW DESIRED.
C. FIRMLY ATTACH CAMERA ASSEMBLIES TO SUBSTANTIAL SURFACES OR STRUCTURAL MEMBERS.
D. COORDINATE THE CAMERA LOCATION WITH OTHER DISCIPLINES TO PROVIDE REQUIRED VIDEO COVERAGE.
E. COORDINATE FINAL CAMERA VIEWS WITH THE OWNER.

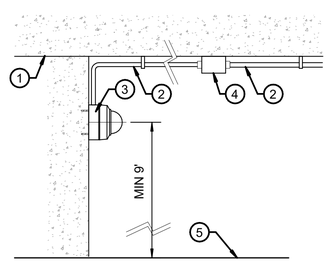

SIDE VIEW

DETAIL KEY NOTES: #

1. CEILING SLAB
2. EMT CONDUIT - SIZE AS REQUIRED
3. DOME CAMERA
4. JUNCTION BOX - SIZE AS REQUIRED
5. FINISHED FLOOR

A5 SURFACE WALL MOUNTED CAMERA

TY103FP TY511DT — SCALE = NTS

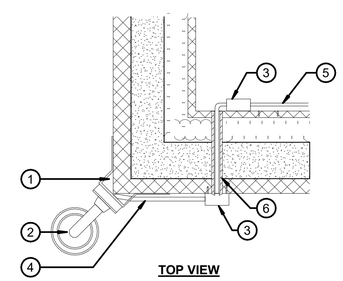

TOP VIEW

DETAIL NOTES

A. SEAL WALL PENETRATIONS WITH WATER RESISTANT AGENT.
B. USE CORNER MOUNT ADAPTER AS REQUIRED.
C. REFER TO FLOOR PLANS AND ELEVATIONS FOR CAMERA MOUNTING HEIGHT.
D. COORDINATE EXTERIOR CAMERA HEIGHT WITH BUILDING ELEVATION AND CEILING SLABS. IN AREAS WITH SUSPENDED CEILING. ROUTE THE INTERIOR JUNCTION BOX AND CONDUIT IN THE CEILING SPACE.
E. PROVIDE CAMERA MOUNTING ASSEMBLIES, CONDUITS AND OUTDOOR JUNCTION BOXES PRODUCED WITH NON-CORROSIVE MATERIALS SO THEY DO NOT PRODUCE RUST OR OTHER DAMAGE TO THE BUILDING FACADE.
F. COORDINATE WITH THE OWNER FOR THE ALLOWABLE WALL PENETRATION METHODS.

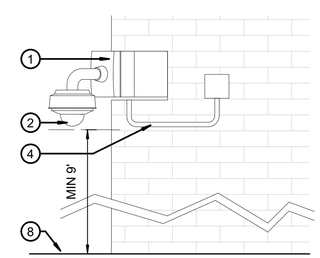

SIDE VIEW

DETAIL KEY NOTES: #

1. CORNER MOUNT ASSEMBLY
2. DOME CAMERA IN WEATHERPROOF ENCLOSURE
3. JUNCTION BOX - SIZE AS REQUIRED
4. LIQUIDTIGHT FLEXIBLE CONDUIT
5. ROUTE CONDUIT OR CAMERA WIRING TO THE LOW VOLTAGE RACEWAYS
6. SEALED WALL PENETRATION
7. EXTERIOR WALL
8. GROUND LEVEL

A9 CORNER MOUNTED CAMERA DETAIL

TY102FP TY511DT — SCALE = NTS

NZP

NZP-DC: UPGRADE ESS VET HOSP, QUAR, & NECROPSY

FOR CONSTRUCTION

GHD Inc.
14501 George Carter Way Ste 102
Chantilly Virginia USA

KEY PLAN

GRAPHIC SCALE(S)

DATE	SUBMISSION
05/30/25	FINAL CD

REVISION # DATE	REVISION DESCRIPTION

Smithsonian Institution
Smithsonian Facilities
600 Maryland Avenue S.W. Suite 5001
Washington, DC 20024-2520

BUILDING NAME	NZP
ADDRESS	3001 CONNECTICUT AVE. NW WASHINGTON, DC 20008
PROJECT TITLE	NZP-DC: UPGRADE ESS VET HOSP, QUAR, & NECROPSY
OFEO PROJECT NUMBER	
A/E PROJECT NUMBER	12621037
DRAWING TITLE	CAMERA DETAILS
WORKING STAFF	MO (DESIGNED BY) SK (DRAWN BY) DB (CHECKED BY)
SHEET NO.	20 OF 29
	TY 5 11 DT (DISCIPLINE TYPE SEQUENCE DRAWING TYPE)

6/4/2025 7:12:19 AM
TY511DT BY Approver 05/30/25 FINAL CD

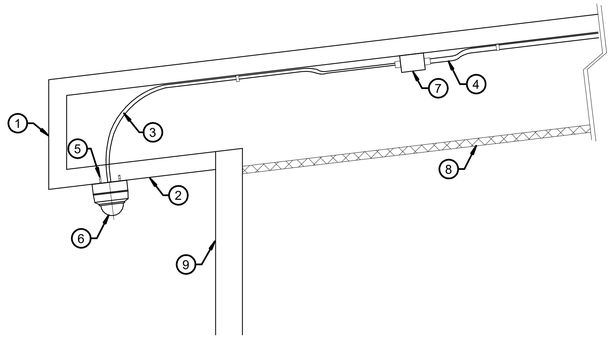

SIDE VIEW

DETAIL NOTES:

A. MOUNT CAMERA 10" ON CENTER FROM EDGE OF SOFFIT.
B. COORDINATE FINAL CAMERA VIEWS WITH THE OWNER.

DETAIL KEY NOTES: #

1. FACIA
2. SOFFIT
3. FLEXIBLE METALLIC CONDUIT
4. EMT CONDUIT
5. MANUFACTURERS MOUNTING ASSEMBLY
6. EXTERIOR DOME CAMERA
7. JUNCTION BOX - SIZE AS REQUIRED
8. SUSPENDED CEILING GRID
9. EXTERIOR WALL

A1

TY101FP TY512DT

CAMERA - SOFFIT MOUNT

SCALE = NTS

6/4/2025 7:12:24 AM
TY512DT BY Approver 05/30/25 FINAL CD

NZP

NZP-DC: UPGRADE ESS VET HOSP, QUAR, & NECROPSY

FOR CONSTRUCTION

GHD Inc.
14501 George Carter Way Ste 102
Chantilly Virginia USA

STAMP

KEY PLAN

GRAPHIC SCALE(S)

DATE	SUBMISSION
05/30/25	FINAL CD

REVISION # DATE	REVISION DESCRIPTION

Smithsonian Institution
Smithsonian Facilities
600 Maryland Avenue S.W. Suite 5001
Washington, DC 20024-2520

BUILDING NAME	NZP
ADDRESS	3001 CONNECTICUT AVE. NW WASHINGTON, DC 20008
PROJECT TITLE	NZP-DC: UPGRADE ESS VET HOSP, QUAR, & NECROPSY
OFEO PROJECT NUMBER	
A/E PROJECT NUMBER	12621037
DRAWING TITLE	CAMERA DETAILS
WORKING STAFF	MO (DESIGNED BY) / SK (DRAWN BY) / DB (CHECKED BY)

SHEET NO. 21 OF 29

TY 5 12 D T
DISCIPLINE TYPE SEQUENCE DRAWING TYPE

DETAIL NOTES:
A. DETAIL IS DIAGRAMMATIC REFER TO MANUFACTURER'S DOCUMENTATION FOR INSTALLATION REQUIREMENTS.
B. REFER TO FLOOR PLANS, DIAGRAMS, AND SCHEDULES FOR ALARM POINT ASSIGNMENT AND DOOR LOCATIONS.
C. REFER TO INTRUSION SYSTEM DIAGRAMS TO DETERMINE A NUMBER OF I/8 INPUT OR R8 OUTPUT MODULES PER ENCLOSURE. INCLUDE 20% SPARE CAPACITY.

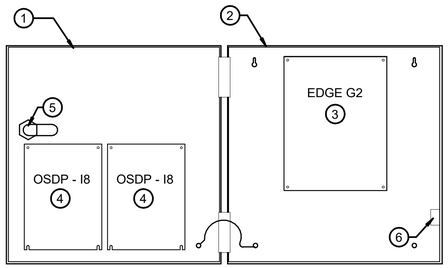

DETAIL KEY NOTES: (#)
1. ENCLOSURE DOOR
2. SOFTWARE HOUSE RM-DCM-2 ENCLOSURE 12"W X 12"H X 4"D [305mm X 305mm X 101 mm]
3. EDGE G2 ACCESS CONTROL DEVICE
4. I/8 MODULE (AS APPLICABLE)
5. ENCLOSURE LOCK
6. TAMPER SWITCH

SOFTWARE HOUSE iSTAR EDGE G2

F1 TY201EL TY520DT — SCALE = NTS

DETAIL NOTES:
A. DETAIL IS DIAGRAMMATIC REFER TO MANUFACTURER'S DOCUMENTATION FOR INSTALLATION REQUIREMENTS.

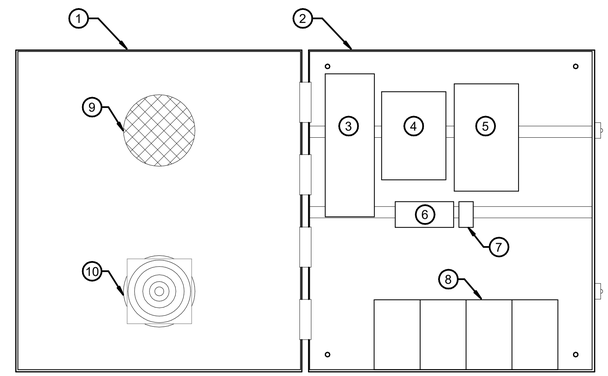

DETAIL KEY NOTES: (#)
1. ENCLOSURE DOOR
2. VENTEV VP-148D1-07132-0 POLYCARBONATE ENCLOSURE 18"H X 16"W X 10"D [457mm X 406mm X 254 mm]
3. BATTERY CHARGER
4. POWER SUPPLY
5. NETWORK SWITCH
6. DC TERMINAL BLOCKS
7. THERMOSTAT
8. FOUR (4) 12V 7AH BATTERIES
9. VENT
10. FAN

VENTEV INTEGRATED UPS POWER SYSTEM

F7 TY201EL TY520DT — SCALE = NTS

DETAIL NOTES:
A. DETAIL IS DIAGRAMMATIC REFER TO MANUFACTURER'S DOCUMENTATION FOR INSTALLATION REQUIREMENTS.
B. REFER TO FLOOR PLANS, DIAGRAMS, AND SCHEDULES FOR ALARM POINT ASSIGNMENT AND DOOR LOCATIONS.
C. REFER TO INTRUSION SYSTEM DIAGRAMS TO DETERMINE A NUMBER OF I/8 INPUT MODULES PER ENCLOSURE. INCLUDE 20% SPARE CAPACITY.

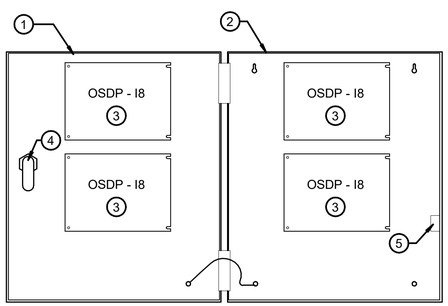

DETAIL KEY NOTES: (#)
1. ENCLOSURE DOOR
2. SOFTWARE HOUSE RM-DCM-2 ENCLOSURE 12"W X 14"H X 3.5"D [356mm X 305mm X 89 mm]
3. I/8 MODULE (AS APPLICABLE)
4. ENCLOSURE LOCK
5. TAMPER SWITCH

SOFTWARE HOUSE RM-DCM-2 WITH INPUT MODULES

A1 TY201EL TY520DT — SCALE = NTS

DETAIL NOTES:
A. DETAIL IS DIAGRAMMATIC REFER TO MANUFACTURER'S DOCUMENTATION FOR INSTALLATION REQUIREMENTS.
B. REFER TO FLOOR PLANS, DIAGRAMS, AND SCHEDULES FOR ALARM POINT ASSIGNMENT AND DOOR LOCATIONS.
C. REFER TO INTRUSION SYSTEM DIAGRAMS TO DETERMINE A NUMBER OF I/8 INPUT OR R8 OUTPUT MODULES PER ENCLOSURE. INCLUDE 20% SPARE CAPACITY.

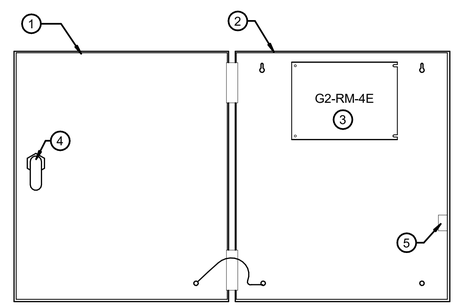

DETAIL KEY NOTES: (#)
1. ENCLOSURE DOOR
2. SOFTWARE HOUSE RM-DCM-2 ENCLOSURE 12"W X 14"H X 3.5"D [356mm X 305mm X 89 mm]
3. G2-RM-4E READER MODULE
4. ENCLOSURE LOCK
5. TAMPER SWITCH

SOFTWARE HOUSE G2-RM-DCM-2 WITH READER MODULE

A7 TY501DT TY520DT — SCALE = NTS

6/4/2025 7:12:20 AM
TY520DT BY Approver 05/30/25 FINAL CD

NZP

NZP-DC: UPGRADE ESS VET HOSP, QUAR, & NECROPSY

FOR CONSTRUCTION

GHD Inc.
14501 George Carter Way Ste 102
Chantilly Virginia USA

STAMP

KEY PLAN

GRAPHIC SCALE(S)

DATE	SUBMISSION
05/30/25	FINAL CD

REVISION # DATE	REVISION DESCRIPTION

Smithsonian Institution
Smithsonian Facilities
600 Maryland Avenue S.W. Suite 5001
Washington, DC 20024-2520

BUILDING NAME	NZP
ADDRESS	3001 CONNECTICUT AVE. NW WASHINGTON, DC 20008
PROJECT TITLE	NZP-DC: UPGRADE ESS VET HOSP, QUAR, & NECROPSY
OFEO PROJECT NUMBER	
A/E PROJECT NUMBER	12621037
DRAWING TITLE	PANEL DETAILS
WORKING STAFF	MO (DESIGNED BY) / SK (DRAWN BY) / DB (CHECKED BY)

SHEET NO. 22 OF 29

TY 5 20 DT
DISCIPLINE / TYPE / SEQUENCE / DRAWING TYPE

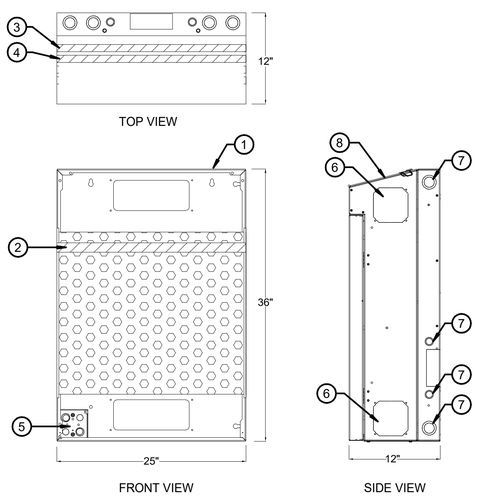

DETAIL NOTES:
A. DETAIL IS DIAGRAMMATIC
B. GROUND THE CABINET TO THE TGB IN THE ROOM.

DETAIL KEY NOTES: #
1. LOW PROFILE WALL CABINET
2. CAT 6 PATCH PANEL
3. NETWORK SWITCH - 48 PORT
4. UPS
5. 4"x4" JUNCTION BOX FOR NEMA 5-20R RECEPTACLE
6. FAN KNOCKOUT
7. EMT KNOCKOUT
8. SOLID OR PLEXI WINDOW TOP SPLIT DOOR OPTION

A1 LOW PROFILE WALL CABINET - VET HOSPITAL

TY201EL TY521DT

SCALE = NTS

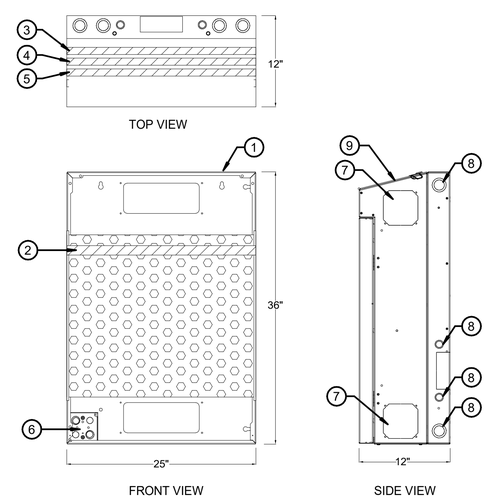

DETAIL NOTES:
A. DETAIL IS DIAGRAMMATIC
B. GROUND THE CABINET TO THE TGB IN THE ROOM.

DETAIL KEY NOTES: #
1. LOW PROFILE WALL CABINET
2. CAT 6 PATCH PANEL
3. FIBER PATCH PANEL
4. NETWORK SWITCH - 48 PORT
5. UPS
6. 4"x4" JUNCTION BOX FOR NEMA 5-20R RECEPTACLE
7. FAN KNOCKOUT
8. EMT KNOCKOUT
9. SOLID OR PLEXI WINDOW TOP SPLIT DOOR OPTION

A7 LOW PROFILE WALL CABINET - QUARANTINE

TY201EL TY521DT

SCALE = NTS

6/4/2025 7:12:20 AM
TY521DT BY Approver 05/30/25 FINAL CD

NZP

NZP-DC: UPGRADE ESS VET HOSP, QUAR, & NECROPSY

FOR CONSTRUCTION

GHD Inc.
14501 George Carter Way Ste 102
Chantilly Virginia USA

STAMP

KEY PLAN

GRAPHIC SCALE(S)

DATE	SUBMISSION
05/30/25	FINAL CD

REVISION # DATE	REVISION DESCRIPTION

Smithsonian Institution
Smithsonian Facilities
600 Maryland Avenue S.W. Suite 5001
Washington, DC 20024-2520

BUILDING NAME	NZP
ADDRESS	3001 CONNECTICUT AVE. NW WASHINGTON, DC 20008
PROJECT TITLE	NZP-DC: UPGRADE ESS VET HOSP, QUAR, & NECROPSY
OFEO PROJECT NUMBER	
A/E PROJECT NUMBER	12621037
DRAWING TITLE	RACK DETAILS
WORKING STAFF	MO (DESIGNED BY) / SK (DRAWN BY) / DB (CHECKED BY)
SHEET NO.	23 OF 29
	TY 521 DT (DISCIPLINE / TYPE / SEQUENCE / DRAWING TYPE)

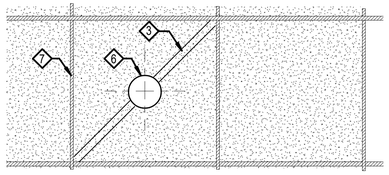

BOTTOM VIEW

DETAIL NOTES:
A. MOUNT THE DETECTOR IN THE CENTER OF THE CEILING TILE.
B. COORDINATE THE DETECTOR LOCATION WITH OTHER DISCIPLINES TO PROVIDE REQUIRED COVERAGE.
C. SECURE DROP-CEILING TILES IF THE AREA ABOVE THE TILES IS USED AS AN AIR RETURN FOR HEATING, VENTILATING, AND AIR CONDITIONING (HVAC) SYSTEMS.
D. REFER TO MANUFACTURERS RECOMMENDATIONS FOR TESTING AND INSTALLATION REQUIREMENTS.

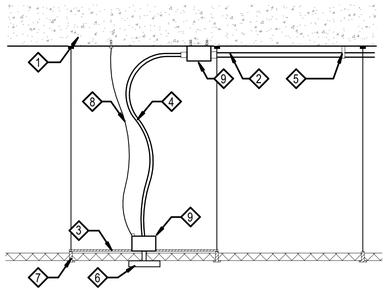

SIDE VIEW

DETAIL KEY NOTES: #
1. CEILING SLAB
2. EMT CONDUIT
3. SUPPORT PLATE
4. 1/2" FLEXIBLE METALLIC CONDUIT SUPPORT
5. GLASS BREAK DETECTOR
6. SUSPENDED CEILING GRID
7. MINIMUM #12 HANGER WIRE, PER PROJECT SEISMIC REQUIREMENTS
8. JUNCTION BOX

ACT CEILING MOUNTED GLASS BREAK DETECTOR

G1
TY101FP TY531DT
SCALE = NTS

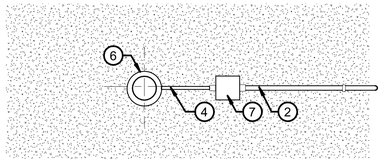

BOTTOM VIEW

DETAIL NOTES:
A. MOUNT DETECTOR ASSEMBLY AT MOST DESIRABLE HEIGHT ABOVE FINISHED FLOOR TO AVOID OBSTRUCTIONS AND TO PROVIDE THE FIELD-OF-VIEW DESIRED.
B. FIRMLY ATTACH DETECTOR ASSEMBLIES TO SUBSTANTIAL CEILING SURFACES OR STRUCTURAL MEMBERS.
C. SECURE DETECTOR TO RIGID PIPE WITH DOUBLE LOCK NUTS.
D. REFER TO MANUFACTURERS RECOMMENDATIONS FOR TESTING AND INSTALLATION REQUIREMENTS.
E. AVOID MOUNTING THE DETECTOR WITHIN 1 FT OF ANY FLUORESCENT LIGHT FIXTURES.

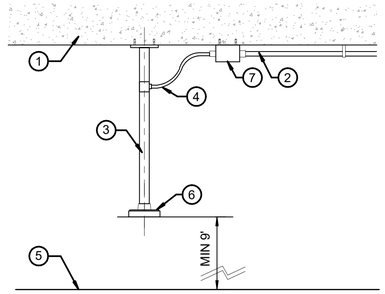

SIDE VIEW

DETAIL KEY NOTES: #
1. CEILING SLAB
2. EMT CONDUIT - SIZE AS REQUIRED
3. 1-1/2"" SCHEDULE 40 PIPE. PAINT TO MATCH SURROUNDING AREA
4. 1/2" FLEXIBLE LIQUIDTIGHT CONDUIT
5. FINISHED FLOOR
6. 360° GLASS BREAK DETECTOR WITH PENDANT KIT
7. JUNCTION BOX - SIZE AS REQUIRED

CEILING MOUNTED GLASS BREAK DETECTOR WITH PENDANT

G5
TY103FP TY531DT
SCALE = NTS

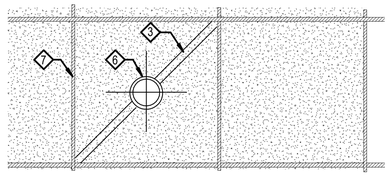

BOTTOM VIEW

DETAIL NOTES:
A. MOUNT THE DETECTOR IN THE CENTER OF THE CEILING TILE.
B. COORDINATE THE DETECTOR LOCATION WITH OTHER DISCIPLINES TO PROVIDE REQUIRED COVERAGE.
C. SECURE DROP-CEILING TILES IF THE AREA ABOVE THE TILES IS USED AS AN AIR RETURN FOR HEATING, VENTILATING, AND AIR CONDITIONING (HVAC) SYSTEMS.
D. AVOID MOUNTING THE DETECTOR WITHIN 1 FT OF ANY FLUORESCENT LIGHT FIXTURES.

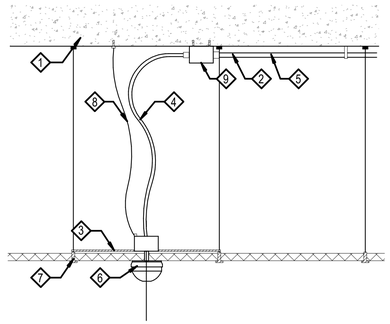

SIDE VIEW

DETAIL KEY NOTES: #
1. CEILING SLAB
2. EMT CONDUIT
3. SUPPORT PLATE
4. 1/2" FLEXIBLE METALLIC CONDUIT
5. ROUTE TO SECURITY PANELS
6. 360° MOTION DETECTOR
7. SUSPENDED CEILING GRID
8. MINIMUM #12 HANGER WIRE, PER PROJECT SEISMIC REQUIREMENTS
9. JUNCTION BOX - SIZE AS REQUIRED

ACT CEILING MOUNTED MOTION DETECTOR

G9
TY101FP TY531DT
SCALE = NTS

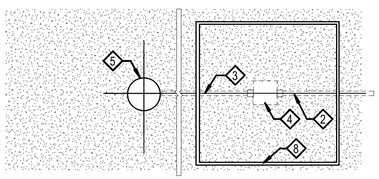

BOTTOM VIEW

DETAIL NOTES:
A. COORDINATE THE DETECTOR LOCATION WITH OTHER DISCIPLINES TO PROVIDE REQUIRED COVERAGE.
B. COORDINATE THE JUNCTION BOX AND ACCESS PANEL LOCATION WITH THE OWNER AND OTHER TRADES.
C. REFER TO MANUFACTURERS RECOMMENDATIONS FOR TESTING AND INSTALLATION REQUIREMENTS.
D. AVOID MOUNTING THE DETECTOR WITHIN 1 FT OF ANY FLUORESCENT LIGHT FIXTURES.

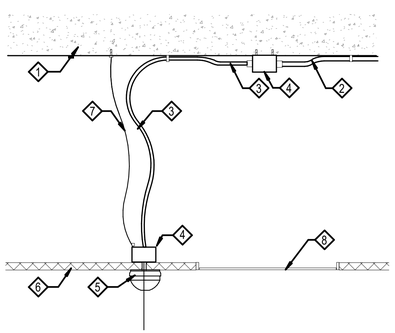

SIDE VIEW

DETAIL KEY NOTES: #
1. CEILING SLAB
2. EMT CONDUIT
3. FLEXIBLE METALLIC CONDUIT
4. JUNCTION BOX - SIZE AS REQUIRED
5. 360° MOTION DETECTOR
6. CEILING
7. MINIMUM #12 HANGER WIRE, PER PROJECT SEISMIC REQUIREMENTS
8. ACCESS PANEL

CEILING MOUNTED MOTION DETECTOR INACCESSIBLE CEILING

A1
TY102FP TY531DT
SCALE = NTS

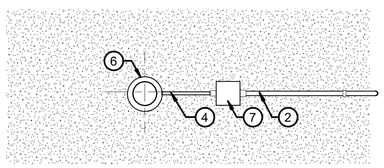

BOTTOM VIEW

DETAIL NOTES:
A. MOUNT DETECTOR ASSEMBLY AT MOST DESIRABLE HEIGHT ABOVE FINISHED FLOOR TO AVOID OBSTRUCTIONS AND TO PROVIDE THE FIELD-OF-VIEW DESIRED.
B. FIRMLY ATTACH DETECTOR ASSEMBLIES TO SUBSTANTIAL CEILING SURFACES OR STRUCTURAL MEMBERS.
C. SECURE DETECTOR TO RIGID PIPE WITH DOUBLE LOCK NUTS.
D. REFER TO MANUFACTURERS RECOMMENDATIONS FOR TESTING AND INSTALLATION REQUIREMENTS.
E. AVOID MOUNTING THE DETECTOR WITHIN 1 FT OF ANY FLUORESCENT LIGHT FIXTURES.

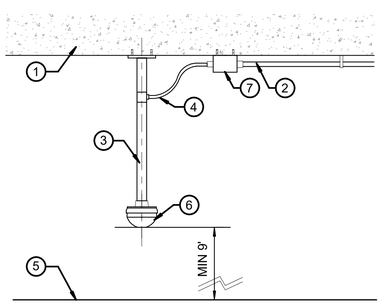

SIDE VIEW

DETAIL KEY NOTES: #
1. CEILING SLAB
2. EMT CONDUIT - SIZE AS REQUIRED
3. 1-1/2"" SCHEDULE 40 PIPE. PAINT TO MATCH SURROUNDING AREA
4. 1/2" FLEXIBLE LIQUIDTIGHT CONDUIT
5. FINISHED FLOOR
6. 360° MOTION DETECTOR WITH PENDANT KIT
7. JUNCTION BOX - SIZE AS REQUIRED

CEILING MOUNTED MOTION DETECTOR WITH PENDANT

A5
TY103FP TY531DT
SCALE = NTS

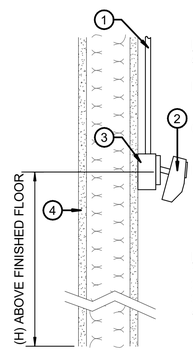

DETAIL NOTES:
A. MOUNT MOTION DETECTOR 6 TO 8 FEET ABOVE FINISHED FLOOR (H).
B. ADJUST THE MOUNTING HEIGHT, AIM AND LENS TO ACHIEVE COVERAGE OF SECURED AREA AT EACH LOCATION.
C. PERFORM DETECTOR TESTS PER SPECIFICATIONS AND IN ACCORDANCE WITH MANUFACTURERS RECOMMENDATIONS.
D. VERIFY PARTITION TYPE FOR EACH LOCATION. CONDUIT SUPPORTING MOTION DETECTOR SHOULD RUN IN CHASE PARTITION.

DETAIL KEY NOTES: #
1. EMT CONDUIT
2. WALL MOUNTED DETECTOR
3. BACK BOX
4. WALL

WALL MOUNTED MOTION DETECTOR

A9
TY104FP TY531DT
SCALE = NTS

NZP

NZP-DC: UPGRADE ESS VET HOSP, QUAR, & NECROPSY

FOR CONSTRUCTION

GHD Inc.
14501 George Carter Way Ste 102
Chantilly Virginia USA

KEY PLAN

GRAPHIC SCALE(S)

DATE	SUBMISSION
05/30/25	FINAL CD

REVISION # DATE	REVISION DESCRIPTION

Smithsonian Institution
Smithsonian Facilities
600 Maryland Avenue S.W. Suite 5001
Washington, DC 20024-2520

BUILDING NAME	NZP
ADDRESS	3001 CONNECTICUT AVE. NW WASHINGTON, DC 20008
PROJECT TITLE	NZP-DC: UPGRADE ESS VET HOSP, QUAR, & NECROPSY
OFEO PROJECT NUMBER	
A/E PROJECT NUMBER	12621037
DRAWING TITLE	IDS DETAILS
WORKING STAFF	MO (DESIGNED BY) SK (DRAWN BY) DB (CHECKED BY)

SHEET NO. 24 OF 29

TY 531 DT
DISCIPLINE TYPE SEQUENCE DRAWING TYPE

6/4/2025 7:12:21 AM
TY531DT BY Approver 05/30/25 FINAL CD

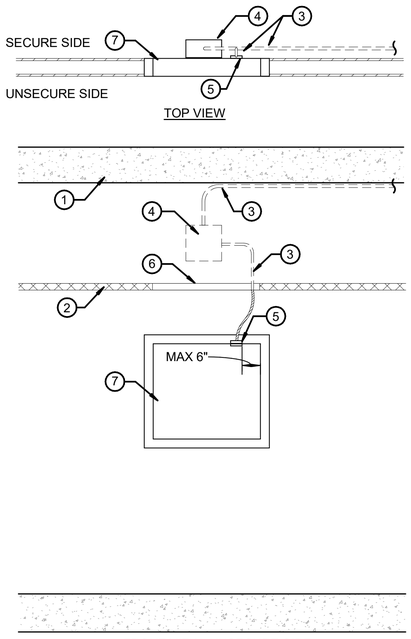

DETAIL NOTES:
A. COORDINATE THE ACCESS PANEL LOCATION IN AREAS WITH INACCESSIBLE CEILINGS WITH ARCHITECT.

DETAIL KEY NOTES: (#)
1. CEILING SLAB
2. FINISHED CEILING
3. EMT CONDUIT
4. JUNCTION BOX WITH COVER, SIZE AS REQUIRED
5. DOOR POSITION SWITCH
6. ACCESS PANEL - WHERE APPLICABLE
7. WINDOW

E1
TY104FP TY532DT

WINDOW IDS

SCALE = NTS

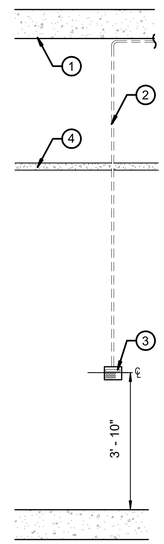

DETAIL NOTES
A. DETAIL IS DIAGRAMMATIC.
B. REFER TO CONDUIT NOTES AND SPECIFICATIONS FOR SECURITY WIRING INFRASTRUCTURE REQUIREMENTS.

DETAIL KEY NOTES: (#)
1. CEILING SLAB
2. EMT CONDUIT TO SECURITY PANEL
3. IDS KEYPAD WITH DOUBLE GANG BACK BOX
4. CEILING

E5
TY102FP TY532DT

ARM/DISARM READER ELEVATION

SCALE = NTS

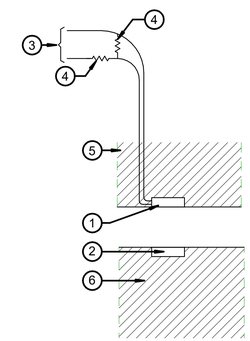

DETAIL NOTES:
A. DETAIL IS DIAGRAMMATIC, USE THE DOOR CONTACT WITH ACCORDANCE TO THE DOOR MATERIAL AND DOOR/FRAME GAP.
B. COORDINATE THE DOOR ROUGH-IN REQUIREMENTS WITH DIVISION 8.
C. DOOR AND DOOR FRAME ROUGH-IN BY DIVISION 8.

DETAIL KEY NOTES: (#)
1. SURFACE DOOR CONTACT - SWITCH
2. SURFACE DOOR CONTACT - MAGNET
3. ARMORED CABLE
4. MANUFACTURER SPECIFIED RESISTORS
5. DOOR FRAME
6. DOOR

E9
TY501DT TY532DT

SURFACE DOOR CONTACT

SCALE = NTS

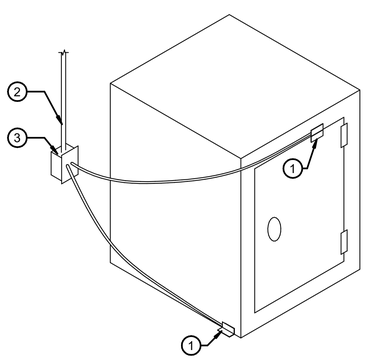

DETAIL NOTES:
A. DETAIL IS DIAGRAMMATIC.

DETAIL KEY NOTES: (#)
1. IDS SENSORS PLACED PER MANUFACTURERS RECOMMENDATIONS
2. INSIDE WALL WHERE APPLICABLE
3. SINGLE GANG, SINGLE HOLE COVER PLATE

A1
TY102FP TY532DT

SAFE DETAIL

SCALE = NTS

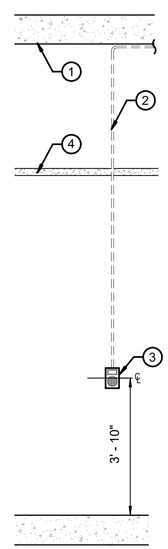

DETAIL NOTES
A. DETAIL IS DIAGRAMMATIC.
B. REFER TO CONDUIT NOTES AND SPECIFICATIONS FOR SECURITY WIRING INFRASTRUCTURE REQUIREMENTS.

DETAIL KEY NOTES: (#)
1. CEILING SLAB
2. EMT CONDUIT TO SECURITY WALL FIELD
3. MASTER VIDEO INTERCOM
4. CEILING

A5
TY101FP TY532DT

VIDEO MASTER INTERCOM ELEVATION

SCALE = NTS

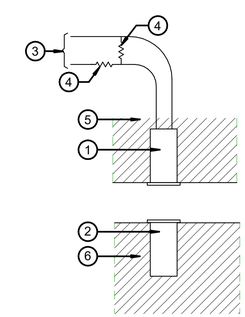

DETAIL NOTES:
A. DETAIL IS DIAGRAMMATIC, USE THE DOOR CONTACT WITH ACCORDANCE TO THE DOOR MATERIAL AND DOOR/FRAME GAP.
B. COORDINATE THE DOOR ROUGH-IN REQUIREMENTS WITH DIVISION 8.
C. DOOR AND DOOR FRAME ROUGH-IN BY DIVISION 8.

DETAIL KEY NOTES: (#)
1. RECESSED DOOR CONTACT - SWITCH
2. RECESSED DOOR CONTACT - MAGNET
3. TO CONTROL PANEL
4. MANUFACTURER SPECIFIED RESISTORS
5. DOOR FRAME
6. DOOR

A9
TY501DT TY532DT

RECESSED DOOR CONTACT

SCALE = NTS

NZP

NZP-DC: UPGRADE ESS VET HOSP, QUAR, & NECROPSY

FOR CONSTRUCTION

GHD Inc.
14501 George Carter Way Ste 102
Chantilly Virginia USA

KEY PLAN

GRAPHIC SCALE(S)

DATE	SUBMISSION
05/30/25	FINAL CD

REVISION # DATE	REVISION DESCRIPTION

Smithsonian Institution
Smithsonian Facilities
600 Maryland Avenue S.W. Suite 5001
Washington, DC 20024-2520

BUILDING NAME	NZP
ADDRESS	3001 CONNECTICUT AVE. NW WASHINGTON, DC 20008
PROJECT TITLE	NZP-DC: UPGRADE ESS VET HOSP, QUAR, & NECROPSY
OFEO PROJECT NUMBER	
A/E PROJECT NUMBER	12621037
DRAWING TITLE	IDS DETAILS
WORKING STAFF	MO (DESIGNED BY) SK (DRAWN BY) DB (CHECKED BY)
SHEET NO. 25 OF 29	TY 5 3 2 D T (DISCIPLINE TYPE SEQUENCE DRAWING TYPE)

6/4/2025 7:12:22 AM
TY532DT BY Approver 05/30/25 FINAL CD

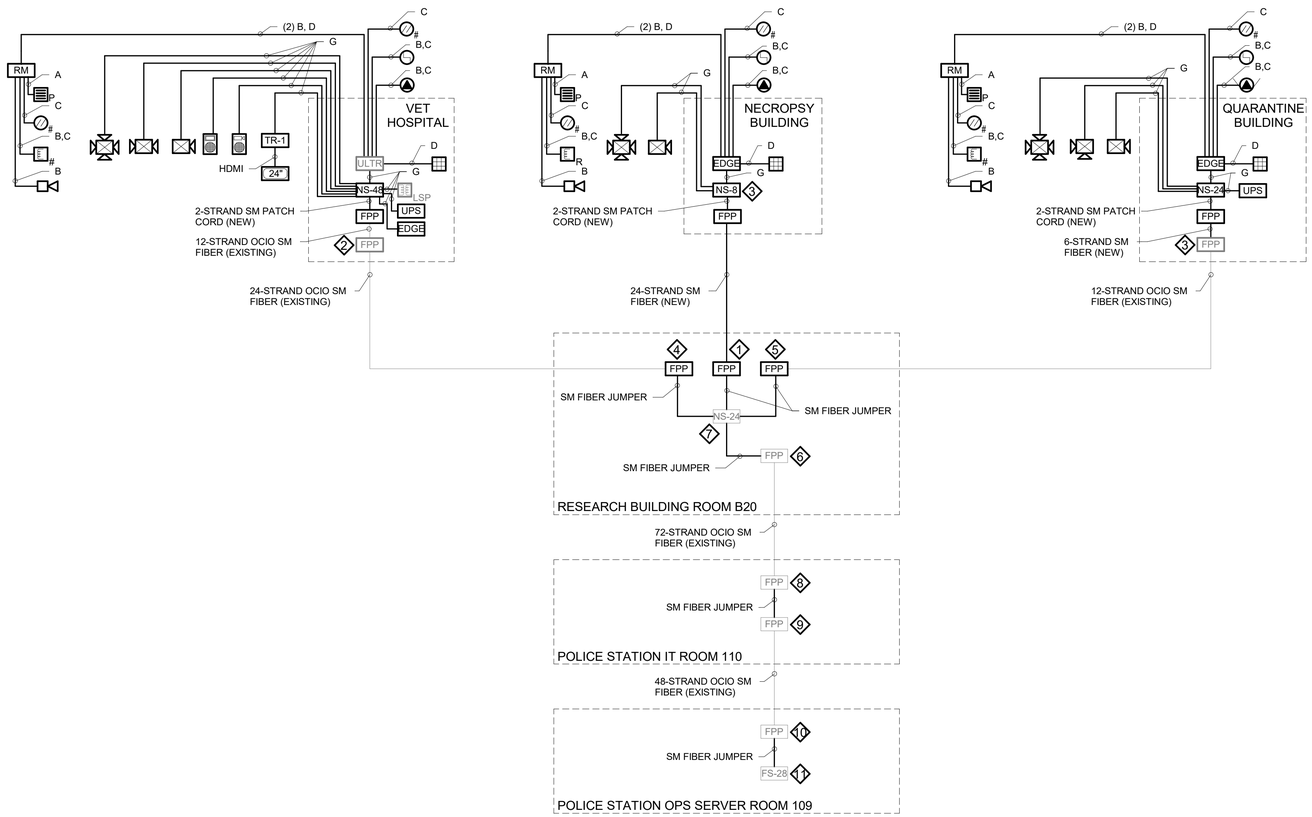

4E
TY601DG

SECURITY SYSTEM DIAGRAM

SCALE = NTS

KEY NOTES

1. PROVIDE FIBER PATCH CARD WITHIN EXISTING FIBER PATCH PANEL IN ROOM B20.
2. EXISTING FIBER PATCH PANEL "1-48 TO RESEARCH 1-24 sm 25-48 MM" LOCATED IN ELECTRICAL / DATA CLOSET 213.
3. EXISTING FIBER PANEL LOCATED IN ROOM 100M1.
4. 97 - 120 SM EXISTING FIBER PATCH PANEL TO VET HOSPITAL.
5. 25-36 SM EXISTING FIBER PATCH PANEL TO QUARANTINE.
6. 1 - 72 SM EXISTING FIBER PATCH PANEL TO POLICE.
7. EXISTING OPS NETWORK SWITCH.
8. 1 - 72 SM EXISTING FIBER PATCH PANEL (BOX 6) TO DZR.
9. 1 - 48 SM EXISTING FIBER PATCH PANEL (BOX 5) TIE TO OPS SERVER ROOM.
10. 1 - 48 SM EXISTING FIBER PATCH PANEL TIE TO IT RM.
11. EXISTING OPS FIBER SWITCH.

CABLE LEGEND

TYPE	WIRE SIZE	# OF CONDUCTORS	DESCRIPTION	BELDEN OR EQUAL	SIGNAL
A	22AWG	6	SHIELDED	9942	CARD READER
B	18AWG	2	SHIELDED	8461	POWER
C	22AWG	2	TWISTED SHIELDED PAIR	8442	CONTACT
D	24AWG	4	TWISTED SHIELDED PAIR	9842	CONTROL (RS-485, 4-WIRE)
E	24AWG	2	TWISTED SHIELDED PAIR	9841	CONTROL (RS-485)
F	22AWG	4	TWISTED SHIELDED PAIR	8729	DEVICE WIRING
G	UTP	8	CAT6	7852A	VIDEO, COMMUNICATION
H	MM	6	FIBER OPTIC (50 MICRON)	FD4H0065F	COMMUNICATION
I	SM/MM	12SM/24MM	FIBER OPTIC HYBRID (OS2/OM4)	FIEDH24AJ	COMMUNICATION
J	16AWG	2	SHIELDED	6200UH	POWER

NZP

NZP-DC: UPGRADE ESS VET HOSP, QUAR, & NECROPSY

FOR CONSTRUCTION

GHD Inc.
14501 George Carter Way Ste 102
Chantilly Virginia USA

KEY PLAN

GRAPHIC SCALE(S)

DATE	SUBMISSION
05/30/25	FINAL CD

REVISION # DATE	REVISION DESCRIPTION

Smithsonian Institution
Smithsonian Facilities
600 Maryland Avenue S.W. Suite 5001
Washington, DC 20024-2520

BUILDING NAME	NZP
ADDRESS	3001 CONNECTICUT AVE. NW WASHINGTON, DC 20008
PROJECT TITLE	NZP-DC: UPGRADE ESS VET HOSP, QUAR, & NECROPSY
OFEO PROJECT NUMBER	
A/E PROJECT NUMBER	12621037
DRAWING TITLE	SECURITY SYSTEM DIAGRAM
WORKING STAFF	MO (DESIGNED BY) SK (DRAWN BY) DB (CHECKED BY)
SHEET NO.	26 OF 29
	TY601DG (DISCIPLINE TYPE SEQUENCE DRAWING TYPE)

6/4/2025 7:12:23 AM
TY601DG BY Approver 05/30/25 FINAL CD

DOOR SCHEDULE

DOOR NUMBER	READER TYPE	DOOR POSITION SWITCH				ELECTRIFIED LOCKSET				
	PROXIMITY (P)	BALANCED RECESSED	RECESSED	SURFACE	OVERHEAD	ELECTRIFIED STRIKE	WITH REQUEST TO EXIT	ELECTROMAGNETIC LOCK	REX PIR	DOOR SOUNDER
NECROPSY BUILDING LEVEL 1										
100A	0	0	0	1	0	0	0	0	0	0
100B	1	0	0	0	2	0	0	0	0	0
100C	1	0	0	1	0	0	1	0	0	1
100D	0	0	0	1	0	0	0	0	0	0
QUARANTINE BUILDING LEVEL 1										
100M1	0	0	0	1	0	0	0	0	0	0
101	1	0	0	1	0	0	1	0	0	1
102	0	0	0	1	0	0	0	0	0	0
103	1	0	0	1	0	0	1	0	0	1
110	1	0	0	1	0	0	1	0	0	1
111A NORTH	0	0	0	1	0	0	0	0	0	0
111A SOUTH	0	0	0	1	0	0	0	0	0	0
111B	0	0	0	1	0	0	0	0	0	0
111C	0	0	0	1	0	0	0	0	0	0
111D	0	0	0	1	0	0	0	0	0	0
111E	0	0	0	1	0	0	0	0	0	0
120A	0	0	0	1	0	0	0	0	0	0
120B	0	0	0	1	0	0	0	0	0	0
121	0	0	0	1	0	0	0	0	0	0
CENTER FENCE GATE	0	0	0	1	0	0	0	0	0	0
NORTH FENCE GATE	0	0	0	1	0	0	0	0	0	0
SOUTH FENCE GATE	0	0	0	1	0	0	0	0	0	0
VET HOSPITAL - LEVEL 1										
100C1	1	0	0	1	0	1	0	0	1	1
100C2	0	0	0	1	0	0	0	0	0	0
100M3	1	0	0	2	0	0	2	0	0	1
103	1	0	1	0	0	0	1	0	0	1
117	0	0	0	1	0	0	0	0	0	0
VET HOSPITAL - LEVEL 2										
200C1	1	0	0	1	0	1	0	0	1	1
200C2	0	0	0	1	0	0	0	0	0	0
200C8	1	0	0	1	0	0	1	0	0	1
200C8OH	1	0	0	0	2	0	0	0	0	0
200C9	0	0	0	1	0	0	0	0	0	0
200M1	1	0	2	0	0	0	2	0	0	1
200M5	0	0	0	2	0	0	0	0	0	0
213	1	0	0	2	0	0	1	0	0	1
234	1	0	2	0	0	0	2	0	0	1
235	0	0	0	2	0	0	0	0	0	0
235A	0	0	0	1	0	0	0	0	0	0
237	0	0	0	2	0	0	0	0	0	0
238	1	0	2	0	0	0	2	0	0	1
240B	0	0	0	1	0	0	0	0	0	0
241	1	0	1	0	0	0	1	0	0	1
242	0	0	0	1	0	0	1	0	0	1
250	1	0	1	0	0	0	1	0	0	1
256	1	0	0	1	0	0	1	0	0	1
257	0	0	0	1	0	0	0	0	0	0
264A	0	0	0	1	0	0	0	0	0	0
265A	0	0	0	1	0	0	0	0	0	0
267	0	0	0	1	0	0	0	0	0	0
270	1	0	0	1	0	0	1	0	0	1
SAFE	0	0	0	0	0	0	0	0	0	0
Total: 142	19	0	9	46	4	2	20	0	2	18

CAMERA SCHEDULE

CAMERA NUMBER	SWITCH NUMBER	PORT #	LEVEL	ROOM NUMBER	POWER	DESCRIPTION	FOV DESCRIPTION
101	001	7	VET HOSPITAL - LEVEL 1	100M3	12 W	2MP WALL MOUNT FIXED DOME CAMERA	DOOR 100M3
102, 103, 104, 105	001	8	VET HOSPITAL - LEVEL 1	100C2	20 W	8MP SURFACE CEILING FIXED DOME MULTILENS CAMERA	VESTIBULE 100C2
201	001	9	VET HOSPITAL - LEVEL 2	200C3	12 W	2MP SURFACE CEILING FIXED DOME CAMERA	DOOR 213
202	001	10	VET HOSPITAL - LEVEL 2	242	12 W	2MP SURFACE CEILING FIXED DOME CAMERA	DOOR 242
203	001	11	VET HOSPITAL - LEVEL 2	241	12 W	2MP SURFACE CEILING FIXED DOME CAMERA	DOOR 241
204	001	12	VET HOSPITAL - LEVEL 2	241	12 W	4MP WALL MOUNT FIXED DOME CAMERA	ROOM 241
205	001	13	VET HOSPITAL - LEVEL 2	241	12 W	4MP WALL MOUNT FIXED DOME CAMERA	ROOM 241
206	001	14	VET HOSPITAL - LEVEL 2	250	12 W	2MP WALL MOUNT FIXED DOME CAMERA	DOOR 250
207, 208	001	15	VET HOSPITAL - LEVEL 2	200C7	12 W	4MP SURFACE CEILING MOUNT FIXED DOME DUAL LENS CAMERA	CORRIDORS 200C6 & 200C7
209	001	16	VET HOSPITAL - LEVEL 2	200M1	12 W	2MP WALL MOUNT FIXED DOME CAMERA	DOOR 200M1
210	001	17	VET HOSPITAL - LEVEL 2	256	12 W	2MP WALL MOUNT FIXED DOME CAMERA	DOOR 256
211	001	18	VET HOSPITAL - LEVEL 2	238	12 W	2MP WALL MOUNT FIXED DOME CAMERA	DOOR 238
212	001	19	VET HOSPITAL - LEVEL 2	234	12 W	2MP WALL MOUNT FIXED DOME CAMERA	DOOR 234
213	001	20	VET HOSPITAL - LEVEL 2	200C8	12 W	2MP SURFACE CEILING FIXED DOME CAMERA	VESTIBULE 200C8
214	001	21	VET HOSPITAL - LEVEL 2	200C8	12 W	2MP SURFACE CEILING FIXED DOME CAMERA	VESTIBULE 200C8
215	001	22	VET HOSPITAL - LEVEL 2	235	12 W	2MP SURFACE CEILING FIXED DOME CAMERA	ROOM 235
216	001	23	VET HOSPITAL - LEVEL 2	235	12 W	2MP SURFACE CEILING FIXED DOME CAMERA	ROOM 235
217	001	24	VET HOSPITAL - LEVEL 2	265	12 W	2MP SURFACE CEILING FIXED DOME CAMERA	ROOM 265
218	001	25	VET HOSPITAL - LEVEL 2	264	12 W	2MP SURFACE CEILING FIXED DOME CAMERA	ROOM 264
219	001	26	VET HOSPITAL - LEVEL 2	200C2	12 W	4MP SURFACE CEILING FIXED DOME CAMERA	VESTIBULE 200C2
401	002	2	NECROPSY BUILDING LEVEL 1	100	12 W	4MP WALL MOUNT FIXED DOME CAMERA	ROOM 100
501	003	2	QUARANTINE BUILDING LEVEL 1	104	12 W	4MP WALL MOUNT FIXED DOME CAMERA	ROOM 104
502	003	3	QUARANTINE BUILDING LEVEL 1	105	12 W	4MP WALL MOUNT FIXED DOME CAMERA	ROOM 105
503	003	4	QUARANTINE BUILDING LEVEL 1	111E	12 W	2MP SURFACE CEILING FIXED DOME CAMERA	ROOM 111E
504	003	5	QUARANTINE BUILDING LEVEL 1	111D	12 W	2MP SURFACE CEILING FIXED DOME CAMERA	ROOM 111D
505	003	6	QUARANTINE BUILDING LEVEL 1	111C	12 W	2MP SURFACE CEILING FIXED DOME CAMERA	ROOM 111C
506	003	7	QUARANTINE BUILDING LEVEL 1	111B	12 W	2MP SURFACE CEILING FIXED DOME CAMERA	ROOM 111B
507, 508	003	8	QUARANTINE BUILDING LEVEL 1	111A	12 W	12MP WALL MOUNT FIXED DOME DUAL LENS CAMERA	CORRIDOR 111A
509	003	9	QUARANTINE BUILDING LEVEL 1	110	12 W	2MP WALL MOUNT FIXED DOME CAMERA	DOOR 110
E101	001	27	VET HOSPITAL - LEVEL 1	EXTERIOR	12 W	14MP PANORAMIC FIXED DOME CAMERA	SOUTH HOSPITAL PROPERTY
E102	001	28	VET HOSPITAL - LEVEL 1	EXTERIOR	12 W	14MP PANORAMIC FIXED DOME CAMERA	SSW HOSPITAL PROPERTY
E103	001	29	VET HOSPITAL - LEVEL 1	EXTERIOR	12 W	14MP PANORAMIC FIXED DOME CAMERA	SW HOSPITAL PROPERTY
E104	001	30	VET HOSPITAL - LEVEL 1	EXTERIOR	12 W	14MP PANORAMIC FIXED DOME CAMERA	WEST HOSPITAL PROPERTY
E105	001	31	VET HOSPITAL - LEVEL 1	EXTERIOR	12 W	14MP PANORAMIC FIXED DOME CAMERA	NNW HOSPITAL PROPERTY
E106	001	32	VET HOSPITAL - LEVEL 1	EXTERIOR	12 W	14MP PANORAMIC FIXED DOME CAMERA	NW HOSPITAL PROPERTY
E201, E202, E203, E204	001	33	VET HOSPITAL - LEVEL 2	EXTERIOR	20 W	8MP CORNER MOUNT FIXED DOME MULTILENS CAMERA	ENTRANCES AND SOUTH HOSPITAL PROPERTY
E205, E206, E207, E208	001	34	VET HOSPITAL - LEVEL 2	EXTERIOR	20 W	8MP CORNER MOUNT FIXED DOME MULTILENS CAMERA	SE HOSPITAL PROPERTY
E209	001	35	VET HOSPITAL - LEVEL 2	EXTERIOR	12 W	4MP WALL MOUNT FIXED DOME CAMERA	NE HOSPITAL PROPERTY
E210	001	36	VET HOSPITAL - LEVEL 2	EXTERIOR	12 W	14MP PANORAMIC FIXED DOME CAMERA	NORTH HOSPITAL PROPERTY
E301, E302, E303, E304	002	3	NECROPSY BUILDING ROOF	EXTERIOR	20 W	8MP CORNER MOUNT FIXED DOME MULTILENS CAMERA	NE NECROPSY PERIMETER
E305, E306, E307, E308	002	4	NECROPSY BUILDING ROOF	EXTERIOR	20 W	8MP CORNER MOUNT FIXED DOME MULTILENS CAMERA	SE NECROPSY PERIMETER
E309, E310, E311, E312	002	5	NECROPSY BUILDING ROOF	EXTERIOR	20 W	8MP CORNER MOUNT FIXED DOME MULTILENS CAMERA	SW NECROPSY PERIMETER
E601, E602, E603, E604	003	10	QUARANTINE BUILDING ROOF	EXTERIOR	20 W	8MP CORNER MOUNT FIXED DOME MULTILENS CAMERA	NW QUARANTINE PROPERTY
E605	003	11	QUARANTINE BUILDING ROOF	EXTERIOR	12 W	2MP WALL MOUNT FIXED DOME CAMERA	SW QUARANTINE PROPERTY
E606, E607, E608, E609	003	12	QUARANTINE BUILDING ROOF	EXTERIOR	20 W	8MP CORNER MOUNT FIXED DOME MULTILENS CAMERA	SE QUARANTINE PROPERTY
E610, E611, E612, E613	003	13	QUARANTINE BUILDING ROOF	EXTERIOR	20 W	8MP CORNER MOUNT FIXED DOME MULTILENS CAMERA	NE QUARANTINE PROPERTY

Grand total: 46

NETWORK SWITCH SCHEDULE

SWITCH NUMBER	PORT #	DEVICE SUBSYSTEM	UNIT NUMBER	CAMERA NUMBER	LEVEL	ROOM NUMBER	POWER (POE)	DESCRIPTION	COMMENTS
001	1	SEC PANELS	100		VET HOSPITAL - LEVEL 1	100M3	0 W	iSTAR ULTRA SE ACCESS CONTROL PANEL	
001	2	SEC PANELS	101		VET HOSPITAL - LEVEL 1	100M3	25 W	iSTAR EDGE G2 DOOR CONTROLLER	
001	3	INT	101		VET HOSPITAL - LEVEL 1	100C3	12 W	WALL MOUNT INTERCOM MASTER STATION	
001	4	INT	102		VET HOSPITAL - LEVEL 1	EXTERIOR	12 W	VIDEO INTERCOM	
001	5	INT	103		VET HOSPITAL - LEVEL 2	200C3	12 W	WALL MOUNT INTERCOM MASTER STATION	
001	6	INT	104		VET HOSPITAL - LEVEL 2	EXTERIOR	12 W	VIDEO INTERCOM	
001	7	VASS		101	VET HOSPITAL - LEVEL 1	100M3	12 W	2MP WALL MOUNT FIXED DOME CAMERA	
001	8	VASS		102, 103, 104, 105	VET HOSPITAL - LEVEL 1	100C2	20 W	8MP SURFACE CEILING FIXED DOME MULTILENS CAMERA	
001	9	VASS		201	VET HOSPITAL - LEVEL 2	200C3	12 W	2MP SURFACE CEILING FIXED DOME CAMERA	
001	10	VASS		202	VET HOSPITAL - LEVEL 2	242	12 W	2MP SURFACE CEILING FIXED DOME CAMERA	
001	11	VASS		203	VET HOSPITAL - LEVEL 2	241	12 W	2MP SURFACE CEILING FIXED DOME CAMERA	
001	12	VASS		204	VET HOSPITAL - LEVEL 2	241	12 W	4MP WALL MOUNT FIXED DOME CAMERA	
001	13	VASS		205	VET HOSPITAL - LEVEL 2	241	12 W	4MP WALL MOUNT FIXED DOME CAMERA	
001	14	VASS		206	VET HOSPITAL - LEVEL 2	250	12 W	2MP WALL MOUNT FIXED DOME CAMERA	
001	15	VASS		207, 208	VET HOSPITAL - LEVEL 2	200C7	12 W	4MP SURFACE CEILING MOUNT FIXED DOME DUAL LENS CAMERA	
001	16	VASS		209	VET HOSPITAL - LEVEL 2	200M1	12 W	2MP WALL MOUNT FIXED DOME CAMERA	
001	17	VASS		210	VET HOSPITAL - LEVEL 2	256	12 W	2MP WALL MOUNT FIXED DOME CAMERA	
001	18	VASS		211	VET HOSPITAL - LEVEL 2	238	12 W	2MP WALL MOUNT FIXED DOME CAMERA	
001	19	VASS		212	VET HOSPITAL - LEVEL 2	234	12 W	2MP WALL MOUNT FIXED DOME CAMERA	
001	20	VASS		213	VET HOSPITAL - LEVEL 2	200C8	12 W	2MP SURFACE CEILING FIXED DOME CAMERA	
001	21	VASS		214	VET HOSPITAL - LEVEL 2	200C8	12 W	2MP SURFACE CEILING FIXED DOME CAMERA	
001	22	VASS		215	VET HOSPITAL - LEVEL 2	235	12 W	2MP SURFACE CEILING FIXED DOME CAMERA	
001	23	VASS		216	VET HOSPITAL - LEVEL 2	235	12 W	2MP SURFACE CEILING FIXED DOME CAMERA	
001	24	VASS		217	VET HOSPITAL - LEVEL 2	265	12 W	2MP SURFACE CEILING FIXED DOME CAMERA	
001	25	VASS		218	VET HOSPITAL - LEVEL 2	264	12 W	2MP SURFACE CEILING FIXED DOME CAMERA	
001	26	VASS		219	VET HOSPITAL - LEVEL 2	200C2	12 W	4MP SURFACE CEILING FIXED DOME CAMERA	
001	27	VASS		E101	VET HOSPITAL - LEVEL 1	EXTERIOR	12 W	14MP PANORAMIC FIXED DOME CAMERA	
001	28	VASS		E102	VET HOSPITAL - LEVEL 1	EXTERIOR	12 W	14MP PANORAMIC FIXED DOME CAMERA	
001	29	VASS		E103	VET HOSPITAL - LEVEL 1	EXTERIOR	12 W	14MP PANORAMIC FIXED DOME CAMERA	
001	30	VASS		E104	VET HOSPITAL - LEVEL 1	EXTERIOR	12 W	14MP PANORAMIC FIXED DOME CAMERA	
001	31	VASS		E105	VET HOSPITAL - LEVEL 1	EXTERIOR	12 W	14MP PANORAMIC FIXED DOME CAMERA	
001	32	VASS		E106	VET HOSPITAL - LEVEL 1	EXTERIOR	12 W	14MP PANORAMIC FIXED DOME CAMERA	
001	33	VASS		E201, E202, E203, E204	VET HOSPITAL - LEVEL 2	EXTERIOR	20 W	8MP CORNER MOUNT FIXED DOME MULTILENS CAMERA	
001	34	VASS		E205, E206, E207, E208	VET HOSPITAL - LEVEL 2	EXTERIOR	20 W	8MP CORNER MOUNT FIXED DOME MULTILENS CAMERA	
001	35	VASS		E209	VET HOSPITAL - LEVEL 2	EXTERIOR	12 W	4MP WALL MOUNT FIXED DOME CAMERA	
001	36	VASS		E210	VET HOSPITAL - LEVEL 2	EXTERIOR	12 W	14MP PANORAMIC FIXED DOME CAMERA	
							457 W		
002	1	SEC PANELS	200		NECROPSY BUILDING LEVEL 1		25 W	iSTAR EDGE G2 DOOR CONTROLLER	
002	2	VASS		401	NECROPSY BUILDING LEVEL 1	100	12 W	4MP WALL MOUNT FIXED DOME CAMERA	
002	3	VASS		E301, E302, E303, E304	NECROPSY BUILDING ROOF	EXTERIOR	20 W	8MP CORNER MOUNT FIXED DOME MULTILENS CAMERA	
002	4	VASS		E305, E306, E307, E308	NECROPSY BUILDING ROOF	EXTERIOR	20 W	8MP CORNER MOUNT FIXED DOME MULTILENS CAMERA	
002	5	VASS		E309, E310, E311, E312	NECROPSY BUILDING ROOF	EXTERIOR	20 W	8MP CORNER MOUNT FIXED DOME MULTILENS CAMERA	
							97 W		
003	1	SEC PANELS	300		QUARANTINE BUILDING LEVEL 1	120	25 W	iSTAR EDGE G2 DOOR CONTROLLER	
003	2	VASS		501	QUARANTINE BUILDING LEVEL 1	104	12 W	4MP WALL MOUNT FIXED DOME CAMERA	
003	3	VASS		502	QUARANTINE BUILDING LEVEL 1	105	12 W	4MP WALL MOUNT FIXED DOME CAMERA	
003	4	VASS		503	QUARANTINE BUILDING LEVEL 1	111E	12 W	2MP SURFACE CEILING FIXED DOME CAMERA	
003	5	VASS		504	QUARANTINE BUILDING LEVEL 1	111D	12 W	2MP SURFACE CEILING FIXED DOME CAMERA	
003	6	VASS		505	QUARANTINE BUILDING LEVEL 1	111C	12 W	2MP SURFACE CEILING FIXED DOME CAMERA	
003	7	VASS		506	QUARANTINE BUILDING LEVEL 1	111B	12 W	2MP SURFACE CEILING FIXED DOME CAMERA	
003	8	VASS		507, 508	QUARANTINE BUILDING LEVEL 1	111A	12 W	12MP WALL MOUNT FIXED DOME DUAL LENS CAMERA	
003	9	VASS		509	QUARANTINE BUILDING LEVEL 1	110	12 W	2MP WALL MOUNT FIXED DOME CAMERA	
003	10	VASS		E601, E602, E603, E604	QUARANTINE BUILDING ROOF	EXTERIOR	20 W	8MP CORNER MOUNT FIXED DOME MULTILENS CAMERA	
003	11	VASS		E605	QUARANTINE BUILDING ROOF	EXTERIOR	12 W	2MP WALL MOUNT FIXED DOME CAMERA	
003	12	VASS		E606, E607, E608, E609	QUARANTINE BUILDING ROOF	EXTERIOR	20 W	8MP CORNER MOUNT FIXED DOME MULTILENS CAMERA	
003	13	VASS		E610, E611, E612, E613	QUARANTINE BUILDING ROOF	EXTERIOR	20 W	8MP CORNER MOUNT FIXED DOME MULTILENS CAMERA	
							193 W		

NZP

NZP-DC: UPGRADE ESS VET HOSP, QUAR, & NECROPSY

FOR CONSTRUCTION

GHD Inc.
14501 George Carter Way Ste 102
Chantilly Virginia USA

KEY PLAN

GRAPHIC SCALE(S)

DATE	SUBMISSION
05/30/25	FINAL CD

REVISION # DATE	REVISION DESCRIPTION

Smithsonian Institution
Smithsonian Facilities
600 Maryland Avenue S.W. Suite 5001
Washington, DC 20024-2520

BUILDING NAME	NZP
ADDRESS	3001 CONNECTICUT AVE. NW WASHINGTON, DC 20008
PROJECT TITLE	NZP-DC: UPGRADE ESS VET HOSP, QUAR, & NECROPSY
OFEO PROJECT NUMBER	
A/E PROJECT NUMBER	12621037
DRAWING TITLE	SCHEDULES – DOOR, CAMERA, AND NETWORK SWITCH
WORKING STAFF	MO (DESIGNED BY) SK (DRAWN BY) DB (CHECKED BY)

SHEET NO. 27 OF 29

TY 701 SH (DISCIPLINE TYPE SEQUENCE DRAWING TYPE)

6/4/2025 7:12:23 AM
TY701SH BY Approver 05/30/25 FINAL CD

DGP NZ 100 RS485

FACILITY BUILDING ABBREVIATION	DGP NUMBER	ACM NUMBER	RS485 PORT	DESCRIPTION	DOOR NUMBER	ROOM NUMBER	LEVEL
100							
NZ	100	1	1	READER MODULE	100C1		VET HOSPITAL - LEVEL 1
NZ	100	1	2	READER MODULE	103		VET HOSPITAL - LEVEL 1
NZ	100	1	3	READER MODULE	200C1		VET HOSPITAL - LEVEL 2
NZ	100	1	4	READER MODULE	213		VET HOSPITAL - LEVEL 2
NZ	100	1	5	READER MODULE	241		VET HOSPITAL - LEVEL 2
NZ	100	1	6	READER MODULE	242		VET HOSPITAL - LEVEL 2
NZ	100	1	7	READER MODULE	250		VET HOSPITAL - LEVEL 2
NZ	100	1	8	I/O MODULE ENCLOSURE		100M3	VET HOSPITAL - LEVEL 1
NZ	100	2	1	READER MODULE	200M1		VET HOSPITAL - LEVEL 2
NZ	100	2	2	READER MODULE	270		VET HOSPITAL - LEVEL 2
NZ	100	2	3	READER MODULE	256		VET HOSPITAL - LEVEL 2
NZ	100	2	4	READER MODULE	238		VET HOSPITAL - LEVEL 2
NZ	100	2	5	READER MODULE	234		VET HOSPITAL - LEVEL 2
NZ	100	2	6	READER MODULE	200C8		VET HOSPITAL - LEVEL 2
NZ	100	2	7	READER MODULE	200C8OH		VET HOSPITAL - LEVEL 2
NZ	100	2	8	SPARE			VET HOSPITAL - LEVEL 1
100: 16							

DGP NZ 100 DGP INPUTS

FACILITY BUILDING ABBREVIATION	DGP NUMBER	GCM INPUT	ACM INPUT	DEVICE TYPE ABBREVIATION	DESCRIPTION	ROOM NUMBER	LEVEL
100							
NZ	100	TAMPER	1	TP	iSTAR ULTRA TAMPER	100M3	VET HOSPITAL - LEVEL 1
NZ	100	AC FAIL	2	PF	iSTAR ULTRA POWER FAIL	100M3	VET HOSPITAL - LEVEL 1
NZ	100	LO BAT	3	LB	iSTAR ULTRA LOW BATTERY	100M3	VET HOSPITAL - LEVEL 1
Grand total: 3							

DGP NZ 101 RS485

FACILITY BUILDING ABBREVIATION	DGP NUMBER	ACM NUMBER	RS485 PORT	DESCRIPTION	DOOR NUMBER	ROOM NUMBER	LEVEL
101							
NZ	101	1	1	ARM / DISARM KEYPAD		100C1	VET HOSPITAL - LEVEL 1
NZ	101	1	2	ARM / DISARM KEYPAD		200C1	VET HOSPITAL - LEVEL 2
NZ	101	1	3	ARM / DISARM KEYPAD	242		VET HOSPITAL - LEVEL 2
101: 3							

DGP NZ 101 DGP INPUTS

FACILITY BUILDING ABBREVIATION	DGP NUMBER	GCM INPUT	ACM INPUT	DEVICE TYPE ABBREVIATION	DESCRIPTION	ROOM NUMBER	LEVEL
101							
NZ	101	TAMPER	1	TP	iSTAR G2 TAMPER	100M3	Level 1
NZ	101	AC FAIL	2	PF	iSTAR G2 POWER FAIL	100M3	Level 1
NZ	101	LO BAT	3	LB	iSTAR G2 LOW BATTERY	100M3	Level 1
Grand total: 3							

DGP NZ 100 I/8 INPUTS

FACILITY BUILDING ABBREVIATION	DGP NUMBER	ACM NUMBER	I_8 NUMBER	I_8 INPUT NUMBER	DEVICE TYPE ABBREVIATION	DESCRIPTION	COUNT	DOOR NUMBER	ROOM NUMBER	LEVEL
100										
NZ	100	1	1	1	MD	MOTION DETECTOR 360 DEGREES - CEILING MOUNT	1		100C2	VET HOSPITAL - LEVEL 1
NZ	100	1	1	2	GB	GLASS BREAK DETECTOR - CEILING MOUNT	1		100C2	VET HOSPITAL - LEVEL 1
NZ	100	1	1	3	DC	DPS - MAGNETIC SWITCH SURFACE MOUNT	1	100C2		VET HOSPITAL - LEVEL 1
NZ	100	1	1	4	MD	MOTION DETECTOR 360 DEGREES - CEILING MOUNT	1		105	VET HOSPITAL - LEVEL 1
NZ	100	1	1	5	GB	GLASS BREAK DETECTOR - CEILING MOUNT	1		105	VET HOSPITAL - LEVEL 1
NZ	100	1	1	6	MD	MOTION DETECTOR 360 DEGREES - CEILING MOUNT	1		106	VET HOSPITAL - LEVEL 1
NZ	100	1	1	7	GB	GLASS BREAK DETECTOR - CEILING MOUNT	1		106	VET HOSPITAL - LEVEL 1
NZ	100	1	1	8	MD	MOTION DETECTOR 360 DEGREES - CEILING MOUNT	1		107	VET HOSPITAL - LEVEL 1
NZ	100	1	2	1	GB	GLASS BREAK DETECTOR - CEILING MOUNT	1		107	VET HOSPITAL - LEVEL 1
NZ	100	1	2	2	MD	MOTION DETECTOR 360 DEGREES - CEILING MOUNT	1		108	VET HOSPITAL - LEVEL 1
NZ	100	1	2	3	GB	GLASS BREAK DETECTOR - CEILING MOUNT	1		108	VET HOSPITAL - LEVEL 1
NZ	100	1	2	4	MD	MOTION DETECTOR 360 DEGREES - CEILING MOUNT	1		110	VET HOSPITAL - LEVEL 1
NZ	100	1	2	5	GB	GLASS BREAK DETECTOR - CEILING MOUNT	1		110	VET HOSPITAL - LEVEL 1
NZ	100	1	2	6	MD	MOTION DETECTOR 360 DEGREES - CEILING MOUNT	1		110	VET HOSPITAL - LEVEL 1
NZ	100	1	2	7	MD	MOTION DETECTOR 360 DEGREES - CEILING MOUNT	1		111	VET HOSPITAL - LEVEL 1
NZ	100	1	2	8	GB	GLASS BREAK DETECTOR - CEILING MOUNT	1		111	VET HOSPITAL - LEVEL 1
NZ	100	1	3	1	MD	MOTION DETECTOR 360 DEGREES - CEILING MOUNT	1		112	VET HOSPITAL - LEVEL 1
NZ	100	1	3	2	GB	GLASS BREAK DETECTOR - CEILING MOUNT	1		112	VET HOSPITAL - LEVEL 1
NZ	100	1	3	3	MD	MOTION DETECTOR 360 DEGREES - CEILING MOUNT	1		113	VET HOSPITAL - LEVEL 1
NZ	100	1	3	4	GB	GLASS BREAK DETECTOR - CEILING MOUNT	1		113	VET HOSPITAL - LEVEL 1
NZ	100	1	3	5	MD	MOTION DETECTOR 360 DEGREES - CEILING MOUNT	1		114	VET HOSPITAL - LEVEL 1
NZ	100	1	3	6	GB	GLASS BREAK DETECTOR - CEILING MOUNT	1		114	VET HOSPITAL - LEVEL 1
NZ	100	1	3	7	DC	DPS - MAGNETIC SWITCH SURFACE MOUNT	1	117		VET HOSPITAL - LEVEL 1
NZ	100	1	3	8	MD	MOTION DETECTOR 360 DEGREES - CEILING MOUNT	1		200C2	VET HOSPITAL - LEVEL 2
NZ	100	1	4	1	GB	GLASS BREAK DETECTOR - CEILING MOUNT	1		200C2	VET HOSPITAL - LEVEL 2
NZ	100	1	4	2	DC	DPS - MAGNETIC SWITCH SURFACE MOUNT	1	200C2		VET HOSPITAL - LEVEL 2
NZ	100	1	4	3	MD	MOTION DETECTOR 360 DEGREES - CEILING MOUNT	1		200C3	VET HOSPITAL - LEVEL 2
NZ	100	1	4	4	MD	MOTION DETECTOR 360 DEGREES - CEILING MOUNT	1		200C6	VET HOSPITAL - LEVEL 2
NZ	100	1	4	5	MD	MOTION DETECTOR 360 DEGREES - CEILING MOUNT	1		200C6	VET HOSPITAL - LEVEL 2
NZ	100	1	4	6	MD	MOTION DETECTOR 360 DEGREES - CEILING MOUNT	1		242	VET HOSPITAL - LEVEL 2
NZ	100	1	4	7	DC	DPS- MAGETIC SWITCH HIGH SECURITY SURFACE MOUNT	2	SAFE		VET HOSPITAL - LEVEL 2
NZ	100	1	4	8	DC	DPS - MAGNETIC SWITCH SURFACE MOUNT	1	257		VET HOSPITAL - LEVEL 2
NZ	100	1	5	1	DC	DPS - MAGNETIC SWITCH SURFACE MOUNT	2	235		VET HOSPITAL - LEVEL 2
NZ	100	1	5	2	OH	DPS- OVERHEAD DOOR POSITION SWITCH	2	200C8OH		VET HOSPITAL - LEVEL 2
NZ	100	1	5	3	DC	DPS - MAGNETIC SWITCH SURFACE MOUNT	1	235A		VET HOSPITAL - LEVEL 2
NZ	100	1	5	4	DC	DPS - MAGNETIC SWITCH SURFACE MOUNT	2	237		VET HOSPITAL - LEVEL 2
NZ	100	1	5	5	DC	DPS - MAGNETIC SWITCH SURFACE MOUNT	1	200C9		VET HOSPITAL - LEVEL 2
NZ	100	1	5	6	DC	DPS - MAGNETIC SWITCH SURFACE MOUNT	2	200M5		VET HOSPITAL - LEVEL 2
NZ	100	1	5	7	DC	DPS - MAGNETIC SWITCH SURFACE MOUNT	1	240B		VET HOSPITAL - LEVEL 2
NZ	100	1	5	8	DC	DPS - MAGNETIC SWITCH SURFACE MOUNT	1	264A		VET HOSPITAL - LEVEL 2
NZ	100	1	6	1	DC	DPS - MAGNETIC SWITCH SURFACE MOUNT	1	265A		VET HOSPITAL - LEVEL 2
NZ	100	1	6	2	DC	DPS - MAGNETIC SWITCH SURFACE MOUNT	1	267		VET HOSPITAL - LEVEL 2
Grand total: 47										

NZP

NZP-DC: UPGRADE ESS VET HOSP, QUAR, & NECROPSY

FOR CONSTRUCTION

GHD Inc.
14501 George Carter Way Ste 102
Chantilly Virginia USA

STAMP

KEY PLAN

GRAPHIC SCALE(S)

DATE 05/30/25

SUBMISSION FINAL CD

REVISION # DATE

REVISION DESCRIPTION

Smithsonian Institution
Smithsonian Facilities
600 Maryland Avenue S.W. Suite 5001
Washington, DC 20024-2520

BUILDING NAME: NZP

ADDRESS: 3001 CONNECTICUT AVE. NW WASHINGTON, DC 20008

PROJECT TITLE: NZP-DC: UPGRADE ESS VET HOSP, QUAR, & NECROPSY

OFEO PROJECT NUMBER

A/E PROJECT NUMBER: 12621037

DRAWING TITLE: SCHEDULES – DGP 100 AND 101 VET HOSPITAL

WORKING STAFF: MO (DESIGNED BY) SK (DRAWN BY) DB (CHECKED BY)

SHEET NO. 28 OF 29

TY 702 SH (DISCIPLINE TYPE SEQUENCE DRAWING TYPE)

6/4/2025 7:12:24 AM
TY702SH BY Approver 05/30/25 FINAL CD

DGP NZ 200 RS485

FACILITY BUILDING ABBREVIATION	DGP NUMBER	ACM NUMBER	RS485 PORT	DESCRIPTION	DOOR NUMBER	ROOM NUMBER	LEVEL
200							
NZ	200	1	1	READER MODULE	100C	100	NECROPSY BUILDING LEVEL 1
NZ	200	1	2	READER MODULE	100C	100	NECROPSY BUILDING LEVEL 1
NZ	200	1	3	ARM / DISARM KEYPAD		100	NECROPSY BUILDING LEVEL 1
NZ	200	1	4	SPARE			NECROPSY BUILDING LEVEL 1
200: 4							

DGP NZ 200 I/8 INPUTS

FACILITY BUILDING ABBREVIATION	DGP NUMBER	ACM NUMBER	I_8 NUMBER	I_8 INPUT NUMBER	DEVICE TYPE ABBREVIATION	DESCRIPTION	COUNT	DOOR NUMBER	ROOM NUMBER	LEVEL
200										
NZ	200	1	1	1	MD	MOTION DETECTOR 360 DEGREES - CEILING MOUNT	2		100	NECROPSY BUILDING LEVEL 1
NZ	200	1	1	2	GB	GLASS BREAK DETECTOR - CEILING MOUNT	2		100	NECROPSY BUILDING LEVEL 1
NZ	200	1	1	3	DC	DPS - MAGNETIC SWITCH SURFACE MOUNT	1	100A		NECROPSY BUILDING LEVEL 1
NZ	200	1	1	4	OH	DPS- OVERHEAD DOOR POSITION SWITCH	2	100B		NECROPSY BUILDING LEVEL 1
NZ	200	1	1	5	DC	DPS - MAGNETIC SWITCH SURFACE MOUNT	1	100D		NECROPSY BUILDING LEVEL 1
Grand total: 8										

DGP NZ 200 DGP INPUTS

FACILITY BUILDING ABBREVIATION	DGP NUMBER	GCM INPUT	ACM INPUT	DEVICE TYPE ABBREVIATION	DESCRIPTION	ROOM NUMBER	LEVEL
200							
NZ	200	TAMPER	1	TP	iSTAR ULTRA TAMPER	100	NECROPSY BUILDING LEVEL 1
NZ	200	AC FAIL	2	PF	iSTAR ULTRA POWER FAIL	100	NECROPSY BUILDING LEVEL 1
NZ	200	LO BAT	3	LB	iSTAR ULTRA LOW BATTERY	100	NECROPSY BUILDING LEVEL 1
Grand total: 3							

DGP NZ 300 RS485

FACILITY BUILDING ABBREVIATION	DGP NUMBER	ACM NUMBER	RS485 PORT	DESCRIPTION	DOOR NUMBER	ROOM NUMBER	LEVEL
300							
NZ	300	1	1	READER MODULE	110		QUARANTINE BUILDING LEVEL 1
NZ	300	1	2	READER MODULE	101		QUARANTINE BUILDING LEVEL 1
NZ	300	1	3	READER MODULE	103		QUARANTINE BUILDING LEVEL 1
NZ	300	1	4	ARM / DISARM KEYPAD		110	QUARANTINE BUILDING LEVEL 1
300: 4							

DGP NZ 300 I/8 INPUTS

FACILITY BUILDING ABBREVIATION	DGP NUMBER	ACM NUMBER	I_8 NUMBER	I_8 INPUT NUMBER	DEVICE TYPE ABBREVIATION	DESCRIPTION	COUNT	DOOR NUMBER	ROOM NUMBER	LEVEL
300										
NZ	300	1	1	1	DC	DPS - MAGNETIC SWITCH SURFACE MOUNT	1	102		QUARANTINE BUILDING LEVEL 1
NZ	300	1	1	2	DC	DPS - MAGNETIC SWITCH SURFACE MOUNT	1	100M1		QUARANTINE BUILDING LEVEL 1
NZ	300	1	1	3	DC	DPS - MAGNETIC SWITCH SURFACE MOUNT	1	111A SOUTH		QUARANTINE BUILDING LEVEL 1
NZ	300	1	1	4	DC	DPS - MAGNETIC SWITCH SURFACE MOUNT	1	SOUTH FENCE GATE		QUARANTINE BUILDING LEVEL 1
NZ	300	1	1	5	DC	DPS - MAGNETIC SWITCH SURFACE MOUNT	1	121		QUARANTINE BUILDING LEVEL 1
NZ	300	1	1	6	DC	DPS - MAGNETIC SWITCH SURFACE MOUNT	1	120A		QUARANTINE BUILDING LEVEL 1
NZ	300	1	1	7	DC	DPS - MAGNETIC SWITCH SURFACE MOUNT	1	120B		QUARANTINE BUILDING LEVEL 1
NZ	300	1	1	8	DC	DPS - MAGNETIC SWITCH SURFACE MOUNT	1	CENTER FENCE GATE		QUARANTINE BUILDING LEVEL 1
NZ	300	1	2	1	DC	DPS - MAGNETIC SWITCH SURFACE MOUNT	1	111E		QUARANTINE BUILDING LEVEL 1
NZ	300	1	2	2	DC	DPS - MAGNETIC SWITCH SURFACE MOUNT	1	111D		QUARANTINE BUILDING LEVEL 1
NZ	300	1	2	3	DC	DPS - MAGNETIC SWITCH SURFACE MOUNT	1	111C		QUARANTINE BUILDING LEVEL 1
NZ	300	1	2	4	DC	DPS - MAGNETIC SWITCH SURFACE MOUNT	1	111B		QUARANTINE BUILDING LEVEL 1
NZ	300	1	2	5	DC	DPS - MAGNETIC SWITCH SURFACE MOUNT	1	111A NORTH		QUARANTINE BUILDING LEVEL 1
NZ	300	1	2	6	DC	DPS - MAGNETIC SWITCH SURFACE MOUNT	1	NORTH FENCE GATE		QUARANTINE BUILDING LEVEL 1
NZ	300	1	2	7	MD	MOTION DETECTOR - WALL MOUNT	2		111A	QUARANTINE BUILDING LEVEL 1
NZ	300	1	2	8	MD	MOTION DETECTOR - WALL MOUNT	1		110	QUARANTINE BUILDING LEVEL 1
Grand total: 17										

DGP NZ 300 DGP INPUTS

FACILITY BUILDING ABBREVIATION	DGP NUMBER	GCM INPUT	ACM INPUT	DEVICE TYPE ABBREVIATION	DESCRIPTION	ROOM NUMBER	LEVEL
300							
NZ	300	TAMPER	1	TP	iSTAR ULTRA TAMPER	110	QUARANTINE BUILDING LEVEL 1
NZ	300	AC FAIL	2	PF	iSTAR ULTRA POWER FAIL	110	QUARANTINE BUILDING LEVEL 1
NZ	300	LO BAT	3	LB	iSTAR ULTRA LOW BATTERY	110	QUARANTINE BUILDING LEVEL 1
Grand total: 3							

NZP

NZP-DC: UPGRADE ESS VET HOSP, QUAR, & NECROPSY

FOR CONSTRUCTION

GHD Inc.
14501 George Carter Way Ste 102
Chantilly Virginia USA

STAMP

KEY PLAN

GRAPHIC SCALE(S)

DATE	SUBMISSION
05/30/25	FINAL CD

REVISION # DATE	REVISION DESCRIPTION

Smithsonian Institution
Smithsonian Facilities
600 Maryland Avenue S.W. Suite 5001
Washington, DC 20024-2520

BUILDING NAME	NZP
ADDRESS	3001 CONNECTICUT AVE. NW WASHINGTON, DC 20008
PROJECT TITLE	NZP-DC: UPGRADE ESS VET HOSP, QUAR, & NECROPSY
OFEO PROJECT NUMBER	
A/E PROJECT NUMBER	12621037
DRAWING TITLE	SCHEDULES – DGP 200 NECROPSY AND 300 QUARANTINE
WORKING STAFF	MO (DESIGNED BY) / SK (DRAWN BY) / DB (CHECKED BY)
SHEET NO.	29 OF 29
	TY 703 SH (DISCIPLINE / TYPE / SEQUENCE / DRAWING TYPE)

6/4/2025 7:12:25 AM
TY703SH BY Approver 05/30/25 FINAL CD